QFCI

Date: 20/09/11 JM

Exhibit Number: 556

TENDER COPY

Statement of Ashley Horneman
Dated 9 September 2011

CD
Statement + 11 Annexures

400 George Street Brisbane
GPO Box 1738 Brisbane
Queensland 4001 Australia
Telephone **1300 309 634**
Facsimile **+61 7 3405 9750**
www.floodcommission.qld.gov.au
ABN 82 696 762 534

Statement of Ashley Simon Horneman

I, Ashley Simon Horneman, Project Manager for the Ferry Terminal Upgrade Program, Brisbane City Council, of 266 George Street, Brisbane, in the State of Queensland, state on oath as follows:

1. Attachment "**ASH-01**" is a copy of a notice from the Commission of the Queensland Floods Commission of Inquiry (**Commission**) dated 2 September 2011 requiring me to provide certain information to the Commission in the form of a Statement by 9 September 2011 (**Notice**). This Statement is provided in response to the Notice.

2. For the purposes of responding to the Notice and preparing this Statement I have, in my position as Project Manager for the Ferry Terminal Upgrade Program of the Brisbane City Council (**Council**), had access to:

   (a) the business records of Council; and

   (b) Council officers,

   to obtain information to provide a response to the Notice. Unless otherwise stated, the matters set out in this Statement is based on my own knowledge and the information derived from the above sources.

3. The documents from the above sources and attached to this Statement have been collated by me and Council officers under my instruction.

4. I set out below my response to each of the questions set out in the Notice.

Qualifications and Background

5. I hold the following qualifications:

   (a) Bachelor of Engineering (Maritime), Australian Maritime College;

   (b) Diploma of Project Management (AIM).

6. I have been qualified as a Maritime Engineer for fifteen years.

7. I initially undertook a secondment with the Council in its Public Transport unit, and I have been employed by Council in my current position as Project Manager, for the Ferry Terminal Upgrade Program for the last two and a half years. Prior to joining Council, I was employed by WorleyParsons as a Senior Maritime Engineer for approximately six years.

[redacted] Witness [redacted]

General Observations

8. To assist the Commission in understanding my specific responses to the questions asked, it maybe useful to set out the following observations.

9. *First*, there are a large number of standards and policies which apply and applied in the design and construction of terminals on the River since the first terminals were constructed. It would be impossible to address all of these in this statement, not least because all such standards have changed over time. I have therefore focused this statement on flood level and load design standards and policies, as I consider that those standards are of most concern to the Commission. If the Commission wishes me to comment on other matters, I will do so.

10. *Second*, flood level standards, where they are included in the design documents referred to in this statement, are expressed as height levels at relevant points in the River for various Defined Flood Events (**DFE**), usually Q10, Q25 and Q100. Flood load levels require a little more explanation. In the design documents referred to in this statement, flood load levels are expressed as velocities. Those velocities are converted into a design load by a formula. The design load then provides the parameter against which the design of the terminal can be undertaken. This is an orthodox manner for expressing and determining design load. When designing to a particular DFE, it is normal for the design engineer to consider adding a factor of safety by referring to design standards. The Guidelines for Design of Marinas provide as guidance for a designer, factors of safety for current loads. As I read them, those guidelines recommend a factor of 1.25 for piles, and 1.5 for pontoons. However, the factor to be adopted is ultimately a matter of professional judgment for the Registered Professional Engineer of Queensland who is responsible for the design. I refer below to a large number of different design specifications for various terminal structures. It is not clear to me what factors have been adopted for those structures.

Response to the Notice

1.	**The standards and policies used in designing and constructing the CityCat and CityFerry terminals prior to the 2010/2011 flood events, including references to any external entities that assess compliance with these standards and policies.**

[redacted] [redacted]

Pre-CityCat (Pre-1996)

11. In or about 1996, CityCats were first introduced in Brisbane. These CityCats were owned by both Council and privately. Those CityCats traditionally operated from the following terminals:-

(a) Apollo Road, Bulimba;

(b) Brett's Wharf, Hamilton;

(c) Commercial Road, Teneriffe;

(d) Oxford Street, Bulimba;

(e) Hardcastle Park, Hawthorne;

(f) Merthyr Road, New Farm;

(g) Wynnum Road, Norman Park;

(h) New Farm Park, New Farm;

(i) Park Avenue, Mowbray Park;

(j) Sydney St, New Farm;

(k) Eagle Street/Riverside, Brisbane City;

(l) Holman Street, Kangaroo Point;

(m) Thornton Street, Kangaroo Point;

(n) QUT-Gardens Point, Brisbane City;

(o) Cultural Centre/Southbank, South Brisbane;

(p) Orleigh Park, West End;

(q) University of QLD, St Lucia; and

(r) TJ Doyle Memorial Drive, Dutton Park.

12. The terminals referred to in paragraph 11 above were designed and constructed at various times from the early 1920's until 1996. I do not know whether these structures were designed

[redacted] Witness [redacted]

to the relevant Australian Standards of the time, as I am not aware of any records within Council, nor was I able to locate documents that define the standards and policies used for the design and construction of these terminals in the time available to prepare this statement.

13. Australian Standard AS3962 "Guidelines for the Design of Marinas" (**Guidelines**) was first published in 1992 and therefore ferry terminals designed prior to this would not have used this Australian Standard as a basis for design.

14. I understand that, prior to 1992, designs may have used existing structural Australian Standards and the requirements of the Department of Environment and Resource Management (**DERM**) (then the Department of Environment).

15. In 1995/1996, the CityFerry terminals referred to in paragraph 11 above were upgraded to accept CityCat vessels. I have located the plans which would have gone to construction contractor/s who undertook the work. Those plans have a common design basis reflected in the "General Notes" document applicable to each upgrade. The General Notes document is, so far as I can see, the same for each upgrade. Attachment "**ASH-02**" is a copy of a typical General Notes page used by Council for the upgrade program. The General Notes do not contain flood levels. They do contain a flood velocity applied to all sites (see paragraph 10 above). The flood velocity adopted is 2.5m/s as appears at item D2 under the heading Design Data. The General Notes do not indicate the DFE to which the flood velocity applies. I would normally assume that it is based on a Q100 event because that was, and is, a common standard for ferry terminal design in the River. However, I note that the design velocity for the new terminals referred to in the next paragraph is 3 m/s which is almost certainly a Q100 level velocity. Accordingly, I am uncertain as to the basis for the calculation of the 2.5m/s.

16. In addition to the upgrades referred to in paragraph 11 above, four new purpose built CityCat terminals were built at:-

    (a) a new site at University of QLD;

    (b) Guyatt Park, St Lucia;

    (c) North Quay, Brisbane City; and

    (d) South Bank, South Brisbane.

17. I have located the construction plans for these four terminals. Attachment "**ASH-03** " is a copy of design drawings for these terminals that includes notes on the design standards used.

[redacted] Witness [redacted]

The drawings provide for flood design levels specific to each site for Q10 and Q100 (see drawing B30-901). The flood velocity adopted is 3 m/s as appears at item D2 under the heading Design Data (see drawing B30-902). That flood velocity is almost certainly calculated for a Q100 event.

Post-CityCat (1996 to January 2011)

18. In and around 2001 the following terminals were upgraded:

(a) New Farm Park, New Farm;

(b) Park Avenue, Mowbray Park;

(c) Sydney St, New Farm; and

(d) Holman Street, Kangaroo Point.

19. I have located the construction plans for the upgrade of the four terminals. Attachment "**ASH-04**" is a copy of design drawings for these terminals that include notes on the design standards used. The drawings provide for flood design levels specific to each site for Q25 and Q100 (see drawing G-004). The flood velocity adopted is 3 m/s as appears at item D2 under the heading Design Data (also see drawing G-004). The flood velocity is calculated for a Q100 event.

20. In and around 2003 and 2004, the following terminals were upgraded:

(a) Regatta, Toowong; and

(b) Riverside, Brisbane City.

21. I have located the construction plans for the upgrade of the Regatta terminal. Attachment "**ASH-05**" is a copy of design drawings for this terminal that include notes on the design standards used. The drawings provide for flood design levels specific to this site of Q25 and Q100 (see drawing RG-S-003). The flood velocity adopted is 3 m/s as appears at item D2 under the heading Design Data (also see drawing RG-S-003). The flood velocity is calculated for a Q100 event. In the time available I was not able to locate any information for the Riverside terminal. I will continue to search for this information and if I am able to locate it, I will provide a copy to the Commission.

22. In and around 2009 and 2010, the following terminals were upgraded:

[redacted] Witness [redacted]

(a) Orleigh park, West End (constructed post-flood); and

(b) Oxford Street, Bulimba (design only, construction postponed).

23. Attachment "**ASH-06** " is a copy of the Design Basis Report for the West End Ferry Terminal Replacement dated 7 September 2009. The design criteria are set out in section 2 of the report at table 2.1 which provides the design Q100 flood level and the DFE. At West End, the DFE is higher than Q100. The flood velocity adopted is 2.02 m/s. The flood velocity is calculated for a Q100 event. Following the flood event, my colleagues and I became concerned that that flood velocity was an underestimate. Accordingly, Council commissioned design engineers GHD to review the flood velocity and the design. GHD identified an estimated flood velocity of 5 m/s but it turned out that the existing design was sufficient to accommodate loads derived from that velocity. Attachment **"ASH-07"** is a copy of the GHD report.

24. Attachment **"ASH-08"** is a copy of Council's Design Brief for the Bulimba Ferry Terminal Upgrade. The design criteria for this upgrade are set out in section 5 which provides the design requirements for Q100 and associated current velocity on floating structures.

25. Prior to the 2011 flood, Council intended that the following terminals would be upgraded:

(a) Hardcastle Park, Hawthorne;

(b) Bretts Wharf, Hamilton; and

(c) Commercial Road, Teneriffe.

26. The design for the Hawthorne and Hamilton terminals has been completed and construction on the Teneriffe terminal has commenced. Attachment "**ASH-09**" is a copy of the Design Basis Report for the upgrade of all three terminals. Because of the close proximity of the terminals, the Q100 level is the same (see section 4.6, Design Water Levels). The flood velocities have some minor variances (see section 4.6, Design Current), which are for the Q100 flood level.

27. In the time available, I have not been able to locate design documentation for the design standards for the Maritime Museum or the QUT Gardens Point terminals. I will continue to search for this information and if I am able to locate it, I will provide a copy to Clayton Utz for provision to the Commission.

[redacted]

28. I note that the design standards for terminals that have been subject to upgrades varies from year to year, depending on the development in the relevant design and construction standards at the time.

2.	**The reconstruction works scheduled for the CityCat and CityFerry terminals to repair damage caused by the 2010/2011 flood events.**

29. In addressing this request and the next request, I will explain how Council has responded, and intends to respond, to the impact of the flood event on the terminals.

30. As at the date of the flood event, there were 24 terminals which supported the CityCat and CityFerry services. Following the flood event, of those 24 terminals:

(a) ten terminals were categorised as usable with minor works. In general terms this meant that the terminals could be reinstated for use within a short time frame. The kind of work required for this category involved cleaning and replacement of electrical components;

(b) seven terminals were categorised as usable with moderate works. These terminals required repairs to pile brackets, removal of broken balustrades, repairs to roof structures and removal of debris; and

(c) the remaining seven terminals were categorised as requiring major repairs. The terminals in this category suffered extensive damage to and/or destruction of, piles, pontoons, gangways and/or waiting areas.

31. In addition to ferry terminals, there are two ferry mooring sites at Dutton Park and St Lucia which were destroyed and require reinstatement.

32. The terminals in the minor and moderate damage categories were (with one exception) reinstated and recommissioned relatively quickly after the flood event. (The exception was River Plaza, which was, on reflection, treated as a major repair case). Obviously, for those terminals, there were no works scheduled which could in my view be characterised as "reconstruction works" and further, all work has in any event been long completed.

33. Of the eight terminals (including River Plaza) which suffered major damage, Council decided to reinstate them on a temporary basis pending the replacement of those terminals with new terminals constructed to different flood design standards generally reflecting the flood event.

[redacted] [redacted]

Ashley Simon Horneman Witness

Pending the design and construction of these new terminals, the existing major damage terminals were reinstated as temporary terminals. The seven so reinstated were:-

(a) University of Queensland;

(b) Regatta;

(c) North Quay;

(d) Queensland University of Technology;

(e) Maritime Museum terminal (formally River Plaza);

(f) Holman Street; and

(g) Sydney Street.

34. The exception in the major damage category is the terminal located at West End, which was already planned as a permanent upgrade prior to the flood event and was completed on 30 July 2011 as a permanent facility. I refer further to that work in paragraph 23.

35. Given the matters in the previous two paragraphs, once again I observe that there now remain no works scheduled to repair damage to terminals which suffered major damage because all of that work is also completed.

36. Notwithstanding that, however, there is presently on foot a process directed to the permanent replacement of the seven terminals which suffered major damage with new terminals built to flood design criteria based on the flood event and more advanced three dimensional modelling. The construction of these new terminals could not properly be characterised as repairing damage caused by the flood but they are works being carried out in response to the flood event and, presumably, are of interest to the Commission.

37. On 1 May 2011, the Queensland State Government announced an International Design Competition for architectural consultants to provide Concept Designs for permanent structures to replace the seven interim ferry terminals and two mooring structures.

38. On 29 July 2011, the winner of this competition was announced. Since this announcement Council has commenced the reconstruction project. In summary, the reconstruction includes the following distinct phases:-

(a) Planning and data gathering;

[redacted]

[redacted] Witness

(b) Concept Design competition;

(c) Detailed Design;

(d) Town Planning Approvals; and

(e) Construction.

39. That project has reached the stage where Council is procuring a detailed design consultant. The tender is to be advertised in the Australian Newspaper on 10 September 2011.

3.	**Whether the reconstruction works for the CityCat and CityFerry terminals adopt different building and design requirements compared to the building and design requirements used for the damaged terminals prior to the 2010/2011 flood events or whether the terminals will be replaced 'like for like'.**

40. All the terminals which have been reinstated, whether suffering minor, moderate or major damage, have been reinstated to their former design. Accordingly, their flood design standards, along with all other design aspects, are substantively the same as they were prior to the flood event.

41. However, that is not the end of the matter. As I have observed above, seven of the eight terminals which suffered major damage are to be replaced.

42. The replacement terminals will be a very different design to that constructed in the past. The new designs will incorporate a deflection structure at the upstream end of the pontoon and the pontoon itself will be streamlined to reduce drag forces. The new designs will also incorporate a retractable gangway that is removed from the path of the flood flow. Attachment "**ASH-10**" is a copy of the successful concept design for the new terminals provided by a group led by Cox Rayner architects.

43. The replacement terminals will be built to flood design standards derived from Council's improved (three dimensional) modelling of the January 2011 flood event. I refer to the tender for detailed design of the new terminals. Attachment "**ASH-11**" is a copy of Council's Ferry Terminal Design Specification which will be provided to tenderers.

44. It is my expectation that flood design levels derived from the flood event will be superior to the flood design standards which have been previously adopted in the design of the existing terminals. Also important is that the design standards will deal specifically with debris

Ash[redacted] Witness [redacted]

loading. Since the flood event, Council has undertaken design reviews of the terminal designs for new terminals which were planned prior to the flood event (see paragraph 23). For the West End and Teneriffe terminal designs, those reviews considered the adequacy of the existing design standards for debris loading for a 15 tonne floating pontoon impact and 2 tonne log impact on the pontoon and/or gangway. It is likely Council will adopt a similar approach to debris loading for the reconstructed terminals and moorings

45. The precise design standards for the new terminals will be determined in consultation with the successful tenderer. It is for that reason that the tender document does not specify such levels in any detail. Council has not yet finally fixed the particular design standards. I would not expect, however, that Council would be dictating the safety factor to be included in any design. That would be a matter for the judgment of the design engineer.

46. Finally, new terminals have been or are being constructed which were the result of planned work prior to the flood event. These works do not fall within the scope of the Requests. I can provide further details in respect of these if the Commission seeks that assistance.

I make this statement conscientiously believing the same to be true, and by virtue of the provisions of the Oaths Act 1987 (Qld).



Ash



Witness

Dated 9 September 2011

Signed and declared by Ashley Simon Horneman
at Brisbane in the State of Queensland
this 9th day of September 2011
Before me: [redacted]

Signature of p[redacted]n the declaration is made

Si[redacted]

[redacted]

Full name and qualification of person before whom the declaration is made

"ASH-01"

Our ref: Doc 1690380

2 September 2011

Ashley Horneman
Project Manager – Ferry Terminal Upgrade
Brisbane City Council
C/- Clayton Utz

REQUIREMENT TO PROVIDE STATEMENT TO COMMISSION OF INQUIRY

I, Justice Catherine E Holmes, Commissioner of Inquiry, pursuant to section 5(1)(d) of the *Commissions of Inquiry Act 1950* (Qld), require Ashley Horneman to provide a written statement, under oath or affirmation, to the Queensland Floods Commission of Inquiry, in which the said Mr Horneman gives an account of:

1. The standards and policies used in designing and constructing the CityCat and CityFerry terminals prior to the 2010/2011 flood events, including references to any external entities that assess compliance with these standards and policies.

2. The reconstruction works scheduled for the CityCat and CityFerry terminals to repair damage caused by the 2010/2011 flood events.

3. Whether the reconstruction works for the CityCat and CityFerry terminals adopt different building and design requirements compared to the building and design requirements used for the damaged terminals prior to the 2010/2011 flood events or whether the terminals will be replaced 'like for like'.

In addressing these matters, Mr Horneman is to:

- provide all information in his possession and identify the source or sources of that information;
- make commentary and provide opinions he is qualified to give as to the appropriateness of particular actions or decisions and the basis of that commentary or opinion.

Mr Horneman may also address other topics relevant to the Terms of Reference of the Commission in the statement, if he wishes.

400 George Street Brisbane
GPO Box 1738 Brisbane
Queensland 4001 Australia
Telephone 1300 309 634
Facsimile +61 7 3405 9750
www.floodcommission.qld.gov.au
ABN 82 696 762 534

The statement is to be provided to the Queensland Floods Commission of Inquiry by Friday, 9 September 2011.

The statement can be provided by post, email or by arranging delivery to the Commission by emailing info@floodcommission.qld.gov.au.



Commissioner
Justice C E Holmes

"ASH-02"

BCC.133.0017

G1 These drawings shall be read in conjunction with the specification, documentation from other consultants and with such other written instructions as may be issued during the course of the contract. All discrepancies shall be referred to the Engineer for decision before proceeding with the work.

G2 All dimensions relevant to the setting out and off-site work shall be verified by the Contractor before construction and fabrication is commenced. Drawings shall not be scaled.

G3 During construction the contractor shall be responsible for maintaining the works in a stable condition and ensuring no part shall be overstressed under construction activities. Temporary bracing or propping shall be provided by the Contractor as required and to the approval of the Engineer.

G4 Workmanship and materials shall be in accordance with the relevant current S.A.A. codes, other codes referenced therein including all amendments. The local statutory authorities, and generally accepted standards of good building practice shall be followed except where varied by the contract documents.

G5 All dimensions are in millimetres unless stated otherwise. All levels, metrages, chainages and co-ordinates are expressed in metres.

G6 Northing and easting co-ordinates are to AMG and the level datum referred to in these drawings is the Australian Height Datum (A.H.D.) .

G7 Bench marks (B.M.) to be used for this contract are shown on the General Arrangement drawing for each ferry terminal.

G8 Drawing numbers have been abbreviated eg. 155 denotes 831-155.

G9 Existing services shown on plans are not necessarily complete nor are their location with regards to location and depth precise.

G10 Proprietary items shall be installed in accordance with the manufacturers specifications.

FOUNDATIONS

F1 Founding levels are subject to final confirmation after inspection by the Engineer. Blinding or structural concrete for structural elements shall not be placed until written approval from the Engineer has been obtained.

F2 Maintain all excavation clean and free of water.

F3 Founding levels to have minimum safe bearing pad and strip footing pressure capacity of 150kPa.

EARTHWORKS

E1 Strip site to min. 150mm under areas for new pavements, buildings and select fill. Do not reuse under pavements and buildings.

E2 Select fill to be a gravel or decomposed/broken rock, free from clay, organic and other deleterious material and conforming to the following:

A.S. Sieve % Passing (WT)

75m	100
9.5mm	30-100
2.36mm	15-65
0.075mm	5-25

Ratio of "% passing 0.075mm" to "% passing 2.36mm" to lie between 0.2 and 0.4 linear shrinkage 2% to 8% compact to 98% maximum dry density in layers not exceeding 200mm thick.

MASONRY

M1 All workmanship and materials shall conform to AS3700 and other codes referenced therein.

M2 All blocks to be grade 12 U.N.O. Mortar type to be C.L.S - 1:1:6.

M3 All blockwork cores shall be concrete filled U.N.O., refer concrete notes.

M4 Cleanout blocks shall be used for bottom course of grouted blockwork walls.

M5 Refer structural steel notes for masonry anchors.

CONCRETE

C1 All workmanship and materials shall be in accordance with AS3600 except where varied by contract documents.

C2 Concrete components and quality shall be as follows unless noted otherwise.

C3 Minimum clear concrete cover to reinforcement shall be as follows unless noted otherwise.

Generally - 50mm.

Concrete surfaces above ground interior environments - 35mm

C4 All concrete shall be properly cured by keeping all exposed surfaces in a moist or damp condition for at least the first seven days after placing U.N.O. For alternative curing methods, refer specification. Any curing agents shall be compatible with surface finishes.

C5 No holes, chases or embedment of pipes other than those shown on the structural drawings shall be made in concreted members without prior approval from the Engineer.

C6 Construction joints shall be properly formed either horizontally or vertically, thoroughly scabbled to remove laitance and poorly compacted material, and used only where shown or specifically approved by the Engineer.

Concrete Class	N15	S45	N15	N25	N50
Cement Type	GP	GP	GP	GP	GP
Max. Aggregate Size (mm)	20	20	10	20	20
Max. Drying Shrinkage at 56 Days to AS1012.13 (microstrains)	-	-	-	-	700
Characteristic Strength at 28 days (MPa)	15	45	15	25	50
Slump Range (mm)	To suit mix design	To suit mix design	230±15	80±15	80±15
Project Assessment Required	No	Yes	No	Yes	Yes

C7 Reinforcement symbols.

Y	Hot rolled deformed bar to AS1302 Grade 400
R	Structural grade plain round bar to AS1302
F	Hard drawn steel wire reinforcing fabric to AS1304
W	Hard drawn steel wire reinforcing wire to AS1303

The number following the bar symbol is the normal bar diameter in millimetres.

C8 Reinforcement position symbols:

T	Top Face	FF	Far Face
NF	Near Face	EW	Each Way
B	Bottom Face	EF	Each Face

C9 Reinforcement is represented diagrammatically and is not necessarily shown in true projection.

C10 Welding of reinforcement shall not be permitted without the prior approval of the Engineer.

C11 All reinforcement shall be firmly supported on plastic or class N50 concrete or approved metal chairs at not greater than 900 centres both ways. Bars shall be tied at alternate intersections.

C12 Splices in reinforcement shall be made only in the positions shown or as otherwise approved in writing by the Engineer where not specifically designated. Lap splices shall be as follows:

Reinforcement Type	Grade/Dia.	Minimum Length Lap
Plain bars	250 R	40 Bars Diameters
Fabric	450 F	2 transverse bars Plus 25mm
Deformed bars	400/Y12 400/Y16 400/Y20 400/Y24	300mm 400mm 500mm 600mm

C13 Formwork shall be designed and constructed in accordance with AS3610.

C14 Formwork to be Class 3 for vertical faces, and Class 4 for soffits.

C15 All formed exposed and re-entrant corners shall be chamfered or filleted 25mm U.N.O.

C16 Minimum stripping times using general purpose portland cement type GP shall be as follows:

Surface Orientation and Type		Minimum Stripping Time for Average Air Temperature Curing Period		
		1 Day	2 Days	3 Days
Horizontal (Beam and slab soffits)	Forms	4 Days	6 Days	8 Days
	Supporting members	12 Days	18 Days	24 Days

This table is based on compliance with the conditions specified in clauses 5.4.3.2 A, B, and C of AS3610. Clause 5.4.3.2b of AS3610 shall also apply to special - class concrete. If these conditions cannot be accommodated, the case shall be referred to the Engineer.

C17 Member sizes are the minimum to be achieved and exclude applied finishes.

C18 All footpaths to be reinforced with a single layer of F62 Fabric.

GENERAL METALWORK NOTES

GM1 All hollow sections to have cap plates 6mm thick, fully sealed.

GM2 All bolts, nuts and washers shall be grade 316 stainless steel unless otherwise noted.

GM3 All metalwork shall be neatly finished with all sharp edges ground smooth.

GM4 All welds shall be 6mm continuous fillet welds where possible otherwise full penetration butt welds, unless otherwise noted. All welded joints must be fully sealed.

GM5 There shall be no direct contact between dissimilar metals. Separation shall be provided by an approved synthetic insulation.

GM6 All base plates, cleats, etc. bearing against concrete shall be seated on a 3mm thick neoprene pad, of the same profile as the bearing plate.

GM7 All copper pipes shall be wrapped in "Denso" Tape petrolatum system where underground and "Denso" Tape Covercoat system where exposed.

COPY OF PLAN SANCTIONED PURSUANT TO SECTION 86 OF HARBOURS ACT 1955 ON 20TH MAY 96
SUBJECT TO CONDITIONS ON FILE 96/AP908
REGIONAL DIRECTOR SOUTHEASTERN DEPT. ENVIRONMENT & HERITAGE

A2 Aluminium sections shall comply with AS1734, AS1866 or AS1867.

A3 All welding shall comply with AS1665.

A4 All welding shall be carried out using Argon Gas shielding.

A5 Aluminium extrusions shall be alloy 6061T6.

A6 Plate is to be alloy 5083 H321.

A7 Tread plate is to be alloy 5251 H34.

A8 Bolts shall be insulated from aluminium by the use of a 1mm nylon sleeve on the bolt shank and 3mm thick nylon washers under bolt head and nut.

STEELWORK NOTES

S1 The fabrication and erection of all steelwork shall be in accordance with the specification and AS4100.

S2 Shop drawings shall be submitted to the engineer for review. (Refer specification for responsibilities). Fabrication shall not commence until approval has been given.

S3 The following material grades shall be used unless noted otherwise.

Hot rolled sections	Grade 250 to AS3679 Grade 350 to AS3679
Plates	Grade 250 to AS3678 Grade 350 to AS3678
Hollow sections	Grade 350 to AS1163
Cold formed sections	Grade G450-2430 to AS1538 and AS1397

S4 Unless noted otherwise steel bolts to be Class 8.8/S and to be hot dip galvanised.

S5 All welding electrodes shall be grade E48XX in accordance with AS1553 and all welding shall be in accordance with AS1554/1.

S6 All welds shall be category SP.

S7 All butt welds shall be complete penetration.

S8 All complete penetration butt welds shall be ultrasonic tested in accordance with AS2207. 15% of fillet welds shall be magnetic particle examined in accordance with AS1171.

S9 'Lysaght' Z or C sections shall be hot dip galvanised, U.N.O., manufactured from hot dip zinc coated steel coil conforming to AS1397 in the following grades and coating classes:

BMT	Grade	Coating Class
1.0	G550	Z200
1.2	G550	Z200
1.5, 1.9	G450	Z200
2.4, 3.0	G450	Z200

S10 Provide all cleats, brackets, fixing holes, etc. required by the services drawings.

S11 All steelwork shall be painted or galvanised or both in accordance with the specification.

S12 All stainless steel "SS" shall be grade 316L welding to comply to AS1554 using grade 316L electrodes.

S13 Cheesat anchors shall be 'Ramset' stainless steel anchors, or equivalent.

S14 All stainless steel nuts and bolts shall be welded together after tightening.

DESIGN DATA

Environmental Loads

D1 Wave loads
Maximum wave height 0.8m with a period of 2 to 4 seconds.

D2 Current
Maximum current flood velocity of 2.5m/s parallel to quay line.

D3 Wind
Forces calculated in accordance with AS1170 Part 2.
Basic wind speed VP = 49m/s in terrain category 2 in any direction.

Live Loads

D4	Minor wharves:	5.0kPa distributed 4.5kN concentrated
D5	Shelter building	Deck uniform distributed load 4kPa.
D6	Pontoon and gangway	Uniform distributed load 3.0 kPa Concentrated Load 4.5 kPa

Vessel Loads

D7 Vessels
- City Cat displacement 26 tons, 25m LOA, approach velocity = 0.3m/s
- Kookaburra Queen 2 displacement 480tons, 31m LOA approach velocity = 0.17m/s
- Small ferries (existing) displacement 12 tons, 12m LOA approach velocity = 0.4m/s

D8 Mooring
22 diameter polypropylene rope 60kN breaking load.

A	22/4/96	TENDER ISSUE	D.L.		
REV.	DATE	DESCRIPTION	P.D.		

QUALITY RECORD	NAME	SIGNATURE	DATE
DRAFTER	G.P.		
DESIGNER CHECK	P.H./D.L.		
PROJECT DIRECTOR APPROVAL	G.T.H		22/4/96

MAUNSELL PROPRIETARY LIMITED
Planners & Environmental Scientists
A.C.N. 004 846 894

CLIENT: Brisbane City; Brisbane Transport

PROJECT TITLE: BRISBANE FERRY TERMINALS
SHEET TITLE: GENERAL NOTES
DATE OF ISSUE: 22/4/96
SIZE: A1
CAD REFERENCE: J:\23795\REFURB\831-002.DWG
DRG. No.: B31-002
REV.: A
SHEET STATUS: TENDER

PLOT DATE: 24/4/96 PLOT TIME 10:13:02

BRISBANE CITY COUNCIL

Brisbane City

Brisbane Transport

BRISBANE FERRY TERMINALS

CONSTRUCTION OF FOUR (4)
FERRY TERMINALS

23795

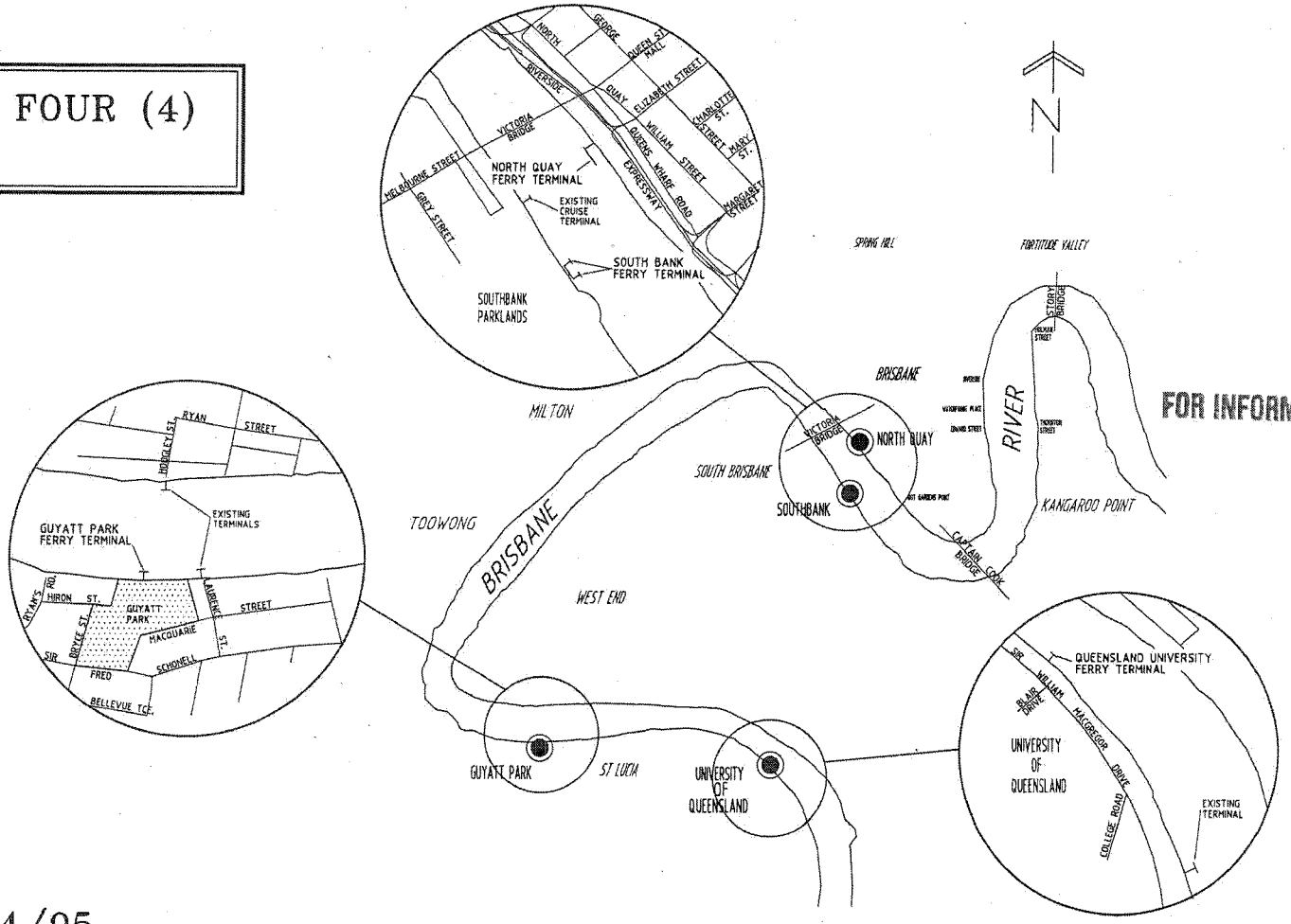

FOR INFORMATION ONLY

"ASH-03"

CONTRACT No. T4/94/95

VOLUME 2 OF 3 - DRAWINGS

MARCH 1996

Maunsell

J:\23795\DESIGN\830-900.DWG PLOT DATE: 03/05/96 PLOT TIME: 15:02:27

BCC.133.0018

GENERAL

PLAN No.	No.	DRAWING TITLE
B30-900	1	LOCALITY PLAN
B30-901	2	DRAWING LIST
B30-902	3	GENERAL NOTES

QUEENSLAND UNIVERSITY TERMINAL

PLAN No.	No.	DRAWING TITLE
B30-910	4	GENERAL ARRANGEMENT
B30-911	5	GENERAL ARRANGEMENT INCL. PILING SCHEDULE AND SETTING OUT
B30-912	6	CIVIL WORKS AND SERVICES PLAN AND DETAILS
B30-913	7	CIVIL WORKS DETAILS
B30-914	8	COMPRESSOR SHELTER DETAILS
B30-919	9	ELECTRICAL SERVICES LAYOUT AND DETAILS

GUYATT PARK TERMINAL

PLAN No.	No.	DRAWING TITLE
B30-920	10	GENERAL ARRANGEMENT
B30-921	11	GENERAL ARRANGEMENT INCL. PILE SCHEDULE AND SETTING OUT
B30-922	12	CIVIL WORKS AND SERVICES PLAN AND DETAILS
B30-923	13	COMPRESSOR SHELTER DETAILS
B30-929	14	ELECTRICAL SERVICES LAYOUT AND DETAILS

NORTH QUAY TERMINAL

PLAN No.	No.	DRAWING TITLE
B30-930	15	GENERAL ARRANGEMENT
B30-931	16	GENERAL ARRANGEMENT INCL. PILING SCHEDULE AND SETOUT
B30-932	17	CONCRETE LAYOUT AND DETAILS
B30-933	18	STEELWORK LAYOUT AND DETAILS
B30-934	19	SITE WORKS AND SERVICES
B30-935	20	COMPRESSOR SHELTER DETAILS
B30-939	21	ELECTRICAL SERVICES LAYOUT AND DETAILS

SOUTHBANK TERMINAL

PLAN No.	No.	DRAWING TITLE
B30-940	22	GENERAL ARRANGEMENT
B30-941	23	GENERAL ARRANGEMENT INCL. PILING SCHEDULE AND SETOUT
B30-942	24	CONCRETE LAYOUT AND DETAILS SHEET 1
B30-943	25	CONCRETE LAYOUT AND DETAILS SHEET
B30-944	26	HANDRAIL SETOUT AND DETAILS
B30-945	27	SITE WORKS AND SERVICES
B30-946	28	SITE WORKS DETAILS
B30-949	29	ELECTRICAL SERVICES LAYOUT AND DETAILS

STRUCTURAL

PLAN No.	No.	DRAWING TITLE
B30-950	30	SHELTER AND ACCESS RAMPS LAYOUT AND DETAILS
B30-951	31	SHELTER STEELWORK FRAMING MARKING PLANS
B30-952	32	SHELTER STEELWORK FRAMING DETAILS
B30-953	33	GANGWAY FRAMING PLANS AND DETAILS
B30-954	34	GANGWAY FRAMING DETAILS
B30-955	35	PILE AND FENDER DETAILS - SHEET 1
B30-956	36	C-DOCK 19S GENERAL ARRANGEMENT
B30-957	37	PONTOON DECK GENERAL ARRANGEMENT
B30-958	38	PONTOON GENERAL ARRANGEMENT OF FRAMING AND RUBBING STRIPS
B30-959	39	PONTOON FRAMING AND RUBBING STRIP DETAILS
B30-960	40	PONTOON ROOF AND RAILING LAYOUT AND DETAILS
B30-961	41	HANDRAIL DETAIL SHEET 1
B30-962	42	HANDRAIL DETAIL SHEET 2
B30-963	43	SERVICES CONNECTION DETAILS
B30-964	70	PILE AND FENDER DETAILS - SHEET 2
B30-965	71	PRECAST CONCRETE SLAB PLANS
B30-966	72	PRECAST CONCRETE SLAB DETAILS

ARCHITECTURAL

PLAN No.	No.	DRAWING TITLE
B30-970	44	NORTH QUAY EXISTING /DEMOLITION PLAN
B30-971	45	NORTH QUAY EXISTING AND FLOOR PLAN
B30-972	46	NORTH QUAY ROOF AND CEILING PLAN
B30-973	47	NORTH QUAY SECTIONS
B30-974	48	UNIVERSITY OF QUEENSLAND PLANS
B30-975	49	UNIVERSITY OF QUEENSLAND SECTIONS
B30-976	50	GUYATT PARK PLANS
B30-977	51	GUYATT PARK SECTIONS
B30-978	52	TYPICAL FERRY TERMINAL DETAILS
B30-979	53	TYPICAL FERRY TERMINAL DETAILS
B30-980	54	TYPICAL FERRY TERMINAL DETAILS
B30-981	55	TYPICAL FERRY TERMINAL DETAILS
B30.982	56	TYPICAL FERRY TERMINAL TICKETING BODTH
B30.983	57	TYPICAL FERRY TERMINAL DETAILS

STANDARD DRAWINGS - MAIN ROADS

PLAN No.	No.	DRAWING TITLE
S1058	58	STANDARDS DETAILS - OCTAGONAL PRESTRESSED CONCRETE PILES

STANDARD DRAWINGS - BCC

PLAN No.	No.	DRAWING TITLE
WS 11-1	59	KERB & CHANNEL PROFILES
WS 11-4	60	ISLAND PEDESTRIAN RAMP
WS 13-1	61	CONCRETE FOOTPATH
WS 14-1	62	GALVANISED TUBULAR HANDRAIL
WS 15-1	63	RATAINING WALLS STONEPITCHED
WS 15-3	64	RETAINING WALL CONCRETE BLOCK TYPE 2 FOOTING
WS 16-2	65	BIKEPATH PAVEMENT JOINTS

STANDARD DRAWINGS - QLD. TRANSPORT

PLAN No.	No.	DRAWING TITLE
284326	66	DOUBLE BICYCLE LOCKER FRAMING ARRANGEMENT AND PANEL DETAILS
284327	67	DOUBLE BICYCLE LOCKER COMPONENTS DETAILS
284328	68	DOUBLE BICYCLE LOCKER NOTES
CA1 4000/23	69	DOUBLE BICYCLE LOCKER DOOR LOCK GUARD ASSEMBLY

SIGNAGE

* FOR SIGNAGE DRAWINGS REFER SPECIFICATIONS & DRAWING 23795-701 TO 708, 710 TO 725.

NOTE:

BOREHOLE LOCATIONS SHOWN ON DRAWINGS 910, 920, 930 & 940 ARE APPROXIMATE ONLY.

2.87 — HIGHEST ASTRONOMICAL TIDE (H.A.T.) (+1.72 AHD)

2.29 — MEAN HIGH WATER SPRINGS (M.H.W.S.) (+1.14 AHD)

1.87 — MEAN HIGH WATER NEAPS (M.H.W.N.) (+0.72 AHD)

1.34 — MEAN SEA LEVEL (M.S.L.)

RL 0.00 A.H.D. 1.15m ABOVE (L.A.T.)

0.79 — MEAN LOW WATER NEAPS (M.L.W.N.) (-0.36 AHD)

0.37 — MEAN LOW WATER SPRINGS (M.L.W.S.) (-0.78 AHD)

0.00 — PORT DATUM (-1.15 AHD) — LOWEST ASTRONOMICAL TIDE (L.A.T.)

TIDAL RANGE

(Tide level in Metres.)

FLOOD LEVELS

FLOOD (ARI yrs)	LOCATION (LEVELS IN METRES TO A.H.D.)			
	UNIVERSITY OF QLD.	GUYATT PARK	NORTH QUAY	SOUTH BANK
10	2.6	2.4	2.0	1.9
100	6.5	5.7	4.5	4.2

FLOOD LEVELS ALLOW FOR TIDES

FOR INFORMATION ONLY

REV.	DATE	DESCRIPTION	P.D.
2	2/5/96	MINOR CHANGES	C.C.V.
1	25/3/96	ISSUED FOR CONSTUCTION	D.L.
0	1/11/95	TENDER ISSUE	D.L.

QUALITY RECORD	NAME	SIGNATURE	DATE
DRAFTER	L.R.M.		
DESIGNER CHECK	P.H./D.L.		
PROJECT DIRECTOR APPROVAL			

MAUNSELL PROPRIETARY LIMITED
Planners & Environmental Scientists.
A.C.N. 006 546 826

CLIENT: Brisbane City — Brisbane Transport

PROJECT TITLE: BRISBANE FERRY TERMINALS
DRG. TITLE: DRAWING LIST
DATE OF ISSUE: 2/5/96
SIZE: A1
CAD REFERENCE: J:\23795\DESIGN\B30-901.DWG
DRG. No.: B30-901
REV.: 2
DRG. STATUS: FOR CONSTRUCTION

5

BGC4230019

GENERAL

G1 These drawings shall be read in conjunction with the specification, documentation from other consultants and with such other written instructions as may be issued during the course of the contract. All discrepancies shall be referred to the engineer for decision before proceeding with the work.

G2 All dimensions relevant to the setting out and off-site work shall be verified by the contractor before construction and fabrication is commenced. Drawings shall not be scaled.

G3 During construction the contractor shall be responsible for maintaining the works in a stable condition and ensuring no part shall be overstressed under construction activities. Temporary bracing or propping shall be provided by the contractor as required and to the approval of the engineer.

G4 Workmanship and materials shall be in accordance with the relevant current S.A.A. codes, other codes referenced therein including all amendments, the local statutory authorities, and generally accepted standards of good building practice shall be followed except where varied by the contract documents. 1

G5 All dimensions are in millimetres unless stated otherwise. All levels, metrages, chainages and co-ordinates are expressed in metres.

G6 Northing and easting co-ordinates are to AMG and the level datum referred to in these drawings is the Australian Height Datum (A.H.D.).

G7 Bench marks (B.M.) to be used for this contract are shown on the General Arrangement drawing for each ferry terminal.

G8 Drawing numbers have been abbreviated eg. 921 denotes B30-921.

G9 Existing services shown on plans are not necessarily complete nor are their location with regards to location and depth precise.

G10 Proprietary items shall be installed in accordance with the manufacturers specifications.

FOUNDATIONS

F1 Founding levels are subject to final confirmation after inspection by the engineer. Blinding or structural concrete for structural elements shall not be placed until written approval from the engineer has been obtained.

F2 Maintain all excavation clean and free of water.

F3 Founding levels to have minimum safe bearing pad and strip footing pressure capacity of 150kPa.

EARTHWORKS

E1 Strip site to min. 150mm under areas for new pavements, buildings and select fill. Do not reuse under pavements and buildings.

E2 Select fill to be a gravel or decomposed/broken rock, free from clay, organic and other deleterious material and conforming to the following:

A.S. Sieve % Passing (WT)

75m	100
9.5mm	30-100
2.36mm	15-85
0.075mm	5-25

Ratio of "% passing 0.075mm" to "% passing 2.36mm" to lie between 0.2 and 0.6 linear shrinkage 2% to 8% compact to 95% modified maximum dry density in layers not exceeding 200mm thick.

MASONRY

M1 All workmanship and materials shall conform to AS3700 and other codes referenced therein.

M2 All blocks to grade 12 U.N.O. mortar type to be 1:1:6.

M3 All blockwork cores shall be concrete filled U.N.O., refer concrete notes.

M4 Cleanout blocks shall be used for bottom course of grouted blockwork walls.

M5 Refer structural steel notes for masonry anchors.

CONCRETE

C1 All workmanship and materials shall be in accordance with AS3600 except where varied by contract documents.

C2 Concrete components and quality shall be as follows unless noted otherwise.

Property	Blinding	Piling	Blockwork	Footpath on Ground Ref. wall fig	All Other Structural Concrete
Concrete Class	N15	S45	N15	N25	N50
Cement Type	GP	GP	GP	GP	GP
Max. Aggregate Size (mm)	20	20	10	20	20
Max. Drying Shrinkage at 56 Days to AS1012.13 (microstrains)	-	-	-	-	700
Characteristic Strength at 28 days (MPa)	15	45	15	25	50
Slump Range (mm)	To suit mix design	To suit mix design	200±15	80±15	80±15
Project Assessment Required	No	Yes	No	Yes	Yes

2

C3 Minimum clear concrete cover to reinforcement shall be as follows unless noted otherwise.

Generally - 50mm.

Concrete surfaces above ground interior environments 35mm 1

C4 All concrete shall be properly cured by keeping all exposed surfaces in a moist or damp condition for at least the first seven days after placing U.N.O. For alternative curing methods, refer specification. Any curing agents shall be compatible with surface finishes.

C5 No holes, chases or embedment of pipes other than those shown on the structural drawings shall be made in concreted members without prior approval from the engineer.

C6 Construction joints shall be properly formed either horizontally or vertically, thoroughly scabbled to remove laitance and poorly compacted material, and used only where shown or specifically approved by the engineer.

C7 Reinforcement symbols:

Y	Hot rolled deformed bar to AS1302 Grade 400
R	Structural grade plain round bar to AS1302
F	Hard drawn steel wire reinforcing fabric to AS1304
W	Hard drawn steel wire reinforcing wire to AS1303

The number following the bar symbol is the normal bar diameter in millimetres.

C8 Reinforcement position symbols:

T	Top Face	FF	Far Face
NF	Near Face	EW	Each Way
B	Bottom Face	EF	Each Face

C9 Reinforcement is represented diagrammatically and is not necessarily shown in true projection.

C10 Welding of reinforcement shall not be permitted without the prior approval of the engineer.

C11 All reinforcement shall be firmly supported on plastic or class N50 concrete or approved metal chairs at not greater than 900 centres both ways. Bars shall be tied at alternate intersections.

C12 Splices in reinforcement shall be made only in the positions shown or as otherwise approved in writing by the superintendent where not specifically designated. Lap splices shall be as follows:

Reinforcement Type	Grade/Dia.	Minimum Length Lap
Plain bars	250 R	40 Bars Diameters
Fabric	450 F	2 transverse bars Plus 25mm
Deformed bars	400/Y12 400/Y16 400/Y20 400/Y24	300mm 400mm 500mm 600mm

C13 Formwork shall be designed and constructed in accordance with AS3610.

C14 Formwork to be Class 3 for vertical faces, and Class 4 for soffits.

C15 All formed exposed and re-entrant corners shall be chamfered or filleted 25mm U.N.O.

C16 Minimum stripping times using general purpose portland cement type GP shall be as follows:

Surface Orientation and Type		Minimum Stripping Time for Average Air Temperature Curing Period		
		1 Day	2 Days	3 Days
Horizontal	Forms	4 Days	6 Days	8 Days
(Beam and slab soffits)	Supporting members	12 Days	18 Days	24 Days

This table is based on compliance with the conditions specified in clauses 5.4.3.1 A, B, and C of AS3610. Clause 5.4.3.2b of AS3610 shall also apply to special - class concrete. If these conditions cannot be accommodated, the case shall be referred to the engineer.

C17 Member sizes are the minimum to be achieved and exclude applied finishes.

C18 All footpaths to be reinforced with a single layer of F62 Fabric.

GENERAL METALWORK NOTES

GM1 All hollow sections to have cap plates 6mm thick, fully sealed.

GM2 All bolts, nuts and washers shall be grade 316 stainless steel unless otherwise noted.

GM3 All metalwork shall be neatly finished with all sharp edges ground smooth.

GM4 All welds shall be 6mm continuous fillet welds where possible otherwise full penetration butt welds, unless otherwise noted. All welded joints must be fully sealed.

GM5 There shall be no direct contact between dissimilar metals. Separation shall be provided by an approved synthetic insulation.

GM6 All base plates, cleats, etc. bearing against concrete shall be seated on a 3mm thick neoprene pad, of the same profile as the bearing plate.

GM7 All copper pipes shall be wrapped in "Densa" Tape petrolatum system where underground and "Densa" Tape Coversoat system where exposed. 1

ALUMINIUM NOTES

A1 All workmanship and materials shall comply with AS1664.

A2 Aluminium sections shall comply with AS1734, AS1866 or AS1867.

A3 All welding shall comply with AS1665.

A4 All welding shall be carried out using Argon Gas shielding.

A5 Aluminium extrusions shall be alloy 6061T6.

A6 Plate is to be alloy 5083 H321.

A7 Tread plate is to be alloy 5251 H34.

A8 Bolts shall be insulated from aluminium by the use of a 1mm nylon sleeve on the bolt shank and 3mm thick nylon washers under bolt head and nut.

STEELWORK NOTES

S1 The fabrication and erection of all steelwork shall be in accordance with the specification and AS4100.

S2 Shop drawings shall be submitted to the engineer for review. (Refer specification for responsibilities).
Fabrication shall not commence until approval has been given.

S3 The following material grades shall be used unless noted otherwise.

Hot rolled sections	Grade 250 to AS3679 Grade 350 to AS3679
Plates	Grade 250 to AS3678 Grade 350 to AS3678
Hollow sections	Grade 350 to AS1163
Cold formed sections	Grade G450-2430 to AS1538 and AS1397

S4 Unless noted otherwise steel bolts to be Class 8.8/S and to be hot dip galvanised.

S5 All welding electrodes shall be grade E48XX in accordance with AS1553 and all welding shall be in accordance with AS1554/1.

S6 All welds shall be category SP.

S7 All butt welds shall be complete penetration.

S8 All complete penetration butt welds shall be ultrasonic tested in accordance with AS2207. 15% of fillet welds shall be magnetic particle examined in accordance with AS1171.

S9 'Lysaght' Z or C sections shall be hot dip galvanised, U.N.O., manufactured from hot dip zinc coated steel coil conforming to AS1397 in the following grades and coating classes:

BMT	Grade	Coating Class
1.0	G550	Z200
1.2	G550	Z200
1.5, 1.9	G450	Z200
2.4, 3.0	G450	Z200

S10 Provide all cleats, brackets, fixing holes, etc. required by the services drawings.

S11 All steelwork shall be painted or galvanised or both in accordance with the specification.

S12 All stainless steel "SS" shall be grade 316L welding to comply to AS1554 using grade 316L electrodes.

S13 Chemset anchors shall be 'Ramset' stainless steel anchors, or equivalent.

S14 All stainless steel nuts and bolts shall be welded together after tightening.

DESIGN DATA

Environmental Loads

D1 Wave loads
Maximum wave height 0.8m with a period of 2 to 4 seconds.

D2 Current
Maximum current flood velocity of 3m/s parallel to quay line.

D3 Wind
Forces calculated in accordance with AS1170 Part 2.
Basic wind speed VP = 49m/s in terrain category 2 in any direction.

Live Loads

D4	Minor wharves:	5.0kPa distributed 4.5kN concentrated
D5	Shelter building	Deck uniform distributed load 4kPa.
D6	Pontoon and gangway	Uniform distributed load 3.0 kPa Concentrated Load 4.5 kPa

Vessel Loads

D7 Vessels
- City Cat displacement 26 tons, 25m LOA, approach velocity = 0.3m/s
- Kookaburra Queen 2 displacement 480tons, 31m LOA approach velocity = 2.17m/s
- Small ferries (existing) displacement 12 tons, 12m LOA approach velocity = 0.6m/s 2

D8 Mooring
22 diameter polypropylene rope 60kN breaking load.

FOR INFORMATION ONLY

REV.	DATE	DESCRIPTION	P.D.
2	25/3/96	ISSUED FOR CONSTRUCTION	D.L.
1	15/12/95	GENERAL REVISIONS AS CLOUDED	D.L.
0	1/11/95	TENDER ISSUE	D.L.

QUALITY RECORD	NAME	SIGNATURE	DATE
DRAFTER	L.R.M.		
DESIGNER CHECK	P.H./D.L.		
PROJECT DIRECTOR APPROVAL			

MAUNSELL PROPRIETARY LIMITED
Planners & Environmental Scientists.
A.C.N. 004 846 864

CLIENT: Brisbane City — Brisbane Transport

PROJECT TITLE: BRISBANE FERRY TERMINALS
DWG. TITLE: GENERAL NOTES
DATE OF ISSUE: 25/3/96
SIZE: A1
CAD REFERENCE: J:\23795\DESIGN\B30-902.DWG
DWG. No.: B30-902
REV.: 2
DWG. STATUS: FOR CONSTRUCTION

9

BCC.139.0020

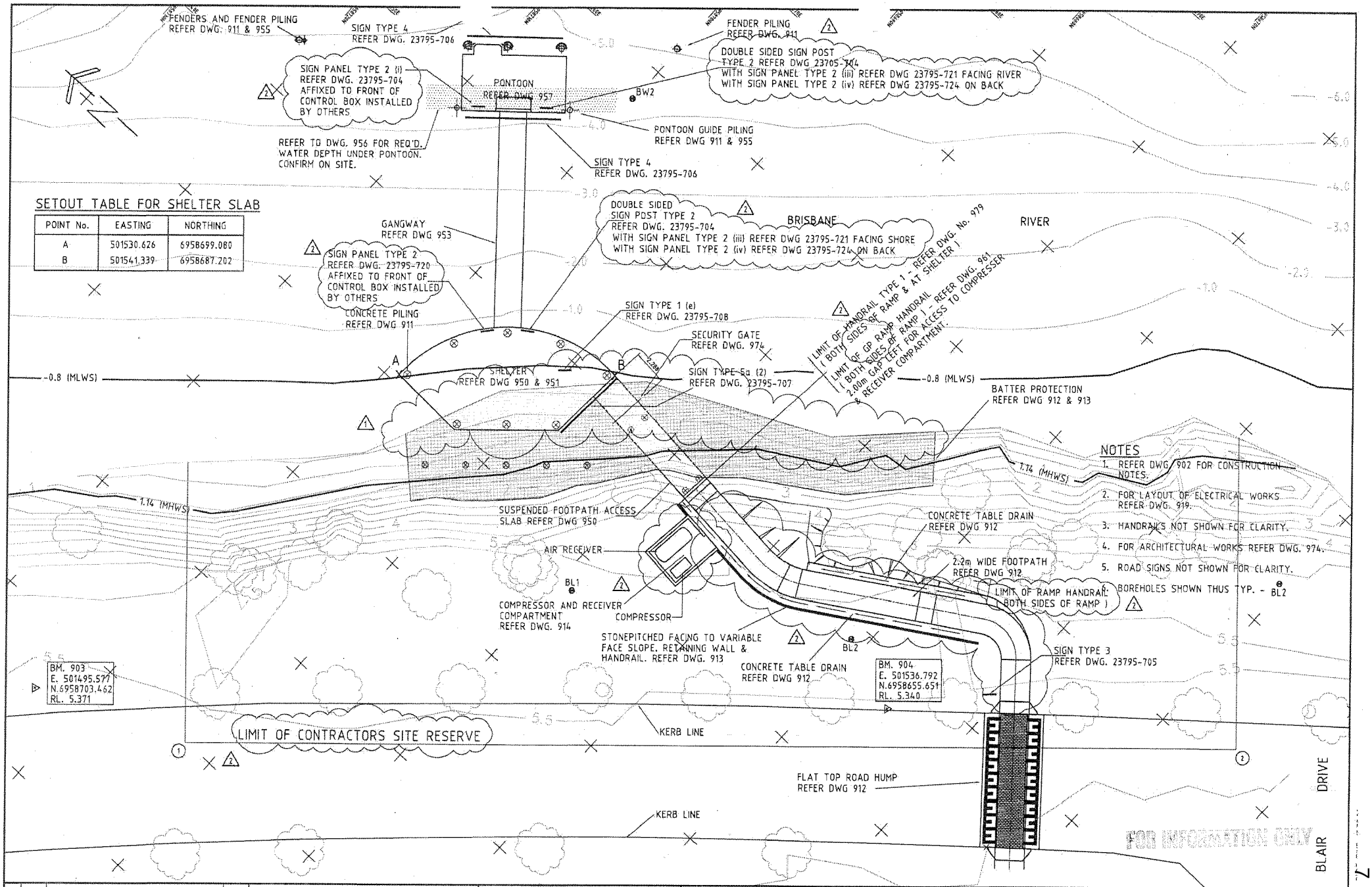

REV.	DATE	DESCRIPTION	P.D.
2	25/3/96	ISSUED OR CONSTRUCTION	D.L.
1	15/12/95	GENERAL REVISION AS CLOUDED	D.L.
0	1/11/95	TENDER ISSUE	D.L.

1:125 0 2.5 5 7.5 10m (FULL SIZE)

ALL LEVELS TO A.H.D.

QUALITY RECORD	NAME	SIGNATURE	DATE
DRAFTER	L.R.M.		
DESIGNER CHECK	P.H./D.L.		
PROJECT DIRECTOR APPROVAL			

MAUNSELL PROPRIETARY LIMITED
Planners & Environmental Scientists
A.C.N. 004 846 824

CLIENT: Brisbane City — Brisbane Transport

PROJECT TITLE: BRISBANE FERRY TERMINALS
ORG. TITLE: QUEENSLAND UNIVERSITY
GENERAL ARRANGEMENT

DATE OF ISSUE: 25/3/96 SIZE: A1
CAD REFERENCE: J:\23795\DESIGN\B30-910.DWG
DRG. No.: B30-910 REV.: 2
DRG. STATUS: FOR CONSTRUCTION

BCC.1310021

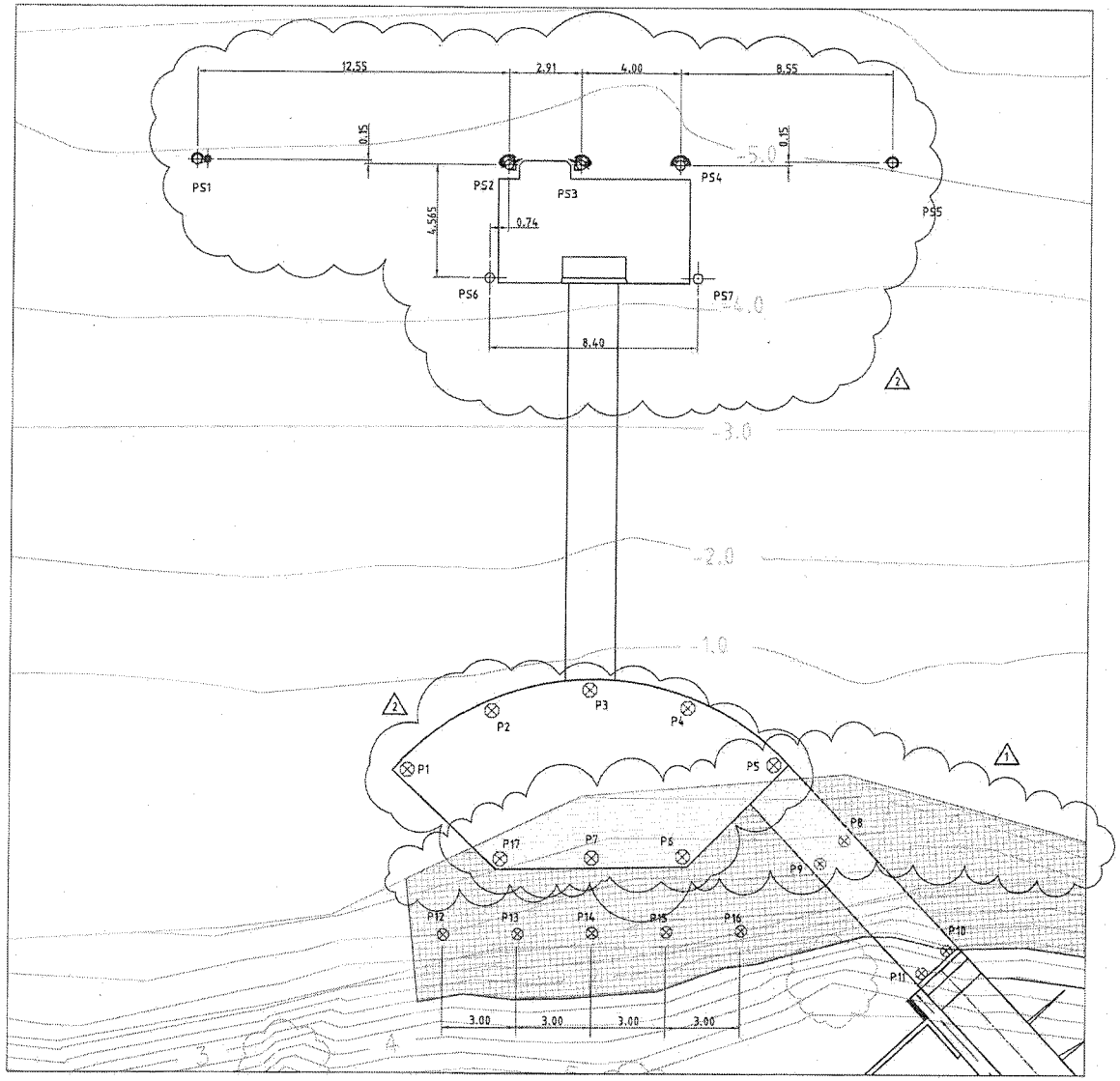

QUEENSLAND UNIVERSITY TERMINAL - GENERAL PILING ARRANGEMENT

PRESTRESSED CONCRETE PILING SCHEDULE - REFER TO STD. MAIN ROADS DRAWING S1058 FOR CONCRETE OCTAGONAL PILE DETAILS

PILE SCHEDULE ALL LEVELS GIVEN IN METRES TO A.H.D.					CO-ORDINATES		ULTIMATE PILE CAPACITY (REFER NOTE 3)
MARK.	SIZE	CUT-OFF LEVEL	GROUND OR BED LEVEL	TOE LEVEL	EASTING	NORTHING	kN
P1.	550	2.475	-0.5	-8.0	501531.033	6958698.638	450
P2.	"	2.475	-1.0	-8.0	501535.071	6958697.636	450
P3.	"	2.25	-1.0	-8.0	501538.301	6958695.230	450
P4.	"	2.475	-0.5	-8.0	501540.362	6958691.769	450
P5.	"	2.475	-0.5	-8.0	501540.944	6958687.649	450
P6.	"	2.475	0.0	-8.0	501535.742	6958687.974	450
P7.	"	2.475	0.0	-8.0	501533.281	6958690.702	450
P8.	450	2.86	0.0	-8.0	501540.540	6958683.472	450
P9.	"	2.86	0.0	-8.0	501539.196	6958683.606	450
P10.	"	3.40	2.5	-8.0	501539.940	6958677.470	450
P11.	"	3.40	3.5	-8.0	501538.597	6958677.604	450
P12.	"	1.5	1.0	-8.0	501527.012	6958693.130	450
P13.	"	1.5	1.0	-8.0	501529.021	6958690.903	450
P14.	"	1.5	1.0	-8.0	501531.031	6958688.675	450
P15.	"	1.5	1.0	-8.0	501533.040	6958686.447	450
P16.	"	1.5	1.0	-8.0	501535.049	6958684.219	450
P17	550	2.475	0.0	-8.0	501530.820	6958693.430	450

STEEL PILING SCHEDULE - REFER TO DRAWING B30-955 FOR PILE TYPE DETAILS

PILE SCHEDULE ALL LEVELS GIVEN IN METRES TO A.H.D.					CO-ORDINATES		LENGTH OF PLATING	DISTANCE FROM TOE
MARK.	PILE TYPE	CUT-OFF LEVEL	GROUND OR BED LEVEL	TOE LEVEL	EASTING	NORTHING	Lp	Lt
PS1.	D	3.60	-5.0	-15.0	501543.822	6958721.263		
PS2.	C2	7.65	-4.5	-15.0	501551.960	6958711.707		
PS3.	C1	7.65	-4.5	-15.0	501553.873	6958709.515		
PS4.	B	7.65	-4.5	-15.0	501556.503	6958706.500		
PS5.	E3	3.60	-5.0	-15.0	501562.237	6958700.156		
PS6.	A1	7.65	-4.0	-15.0	501548.030	6958709.267	6.5	4
PS7.	A1	7.65	-4.0	-15.0	501553.553	6958702.938	6.5	4

NOTE:
1. TOE LEVELS CORRESPOND TO MINIMUM PILE PENETRATION
2. FOR 88C PILE HEAD PREPARATION REFER DWG. 952.
3. "ULTIMATE PILE CAPACITY" IN THE TABLES HAS BEEN SPECIFIED IN ACCORDANCE WITH AS2159-1978 AND CORRESPONDS TO THE MINIMUM TEST VALUE TO BE ACHIEVED BY HILEY CALCULATION ON ANY PILE WHEN ALL PILES PRE TESTED USING HILEY.
4. ALL CONCRETE PILES MUST EXTEND AT LEAST TO THE "HIGHEST TOE LEVEL" SHOWN ON THE TABLE. IN ADDITION THEY MUST BE DRIVEN TO A PENETRATION TO ACHIEVE THE ULTIMATE AXIAL GEOTECHNICAL STRENGTH.
5. THE STEEL PILES ARE TO BE INSTALLED TO THE "REQUIRED TOE LEVEL" AS SHOWN ON THE DRAWINGS

FOR INFORMATION ONLY

REV.	DATE	DESCRIPTION	P.D.
5	22/4/96	SHELTER PILE COORDINATES AMENDED	D.L.
4	17/4/96	SHELTER PILE COORDINATES AND PILE CUT OFF LEVELS AMENDED	D.L.
3	1/4/96	NOTES ADDED AND TABLE CHANGED	D.L.
2	25/3/96	ISSUED FOR CONSTRUCTION	D.L.
1	15/12/95	GENERAL REVISION AS CLOUDED	D.L.
0	1/11/95	TENDER ISSUE	D.L.

1:100 0 2 4 6 8m (FULL SIZE)

QUALITY RECORD	NAME	SIGNATURE	DATE
DRAFTER	L.M.		
DESIGNER CHECK	P.H./D.L.		
PROJECT DIRECTOR APPROVAL			

MAUNSELL PROPRIETARY LIMITED
Planners & Environmental Scientists
A.C.N. 004 848 824

CLIENT: Brisbane City, Brisbane Transport

PROJECT TITLE: BRISBANE FERRY TERMINALS
ORG. TITLE: QUEENSLAND UNIVERSITY GENERAL ARRANGEMENT PILING SCHEDULE & SETTING OUT

DATE OF ISSUE: 22/4/96 SIZE: A1
CAD REFERENCE: C:\DWG\23795\B30-911.DWG
DRG. No.: B30-911 REV.: 5
DRG. STATUS: FOR CONSTRUCTION

BCC/1330022

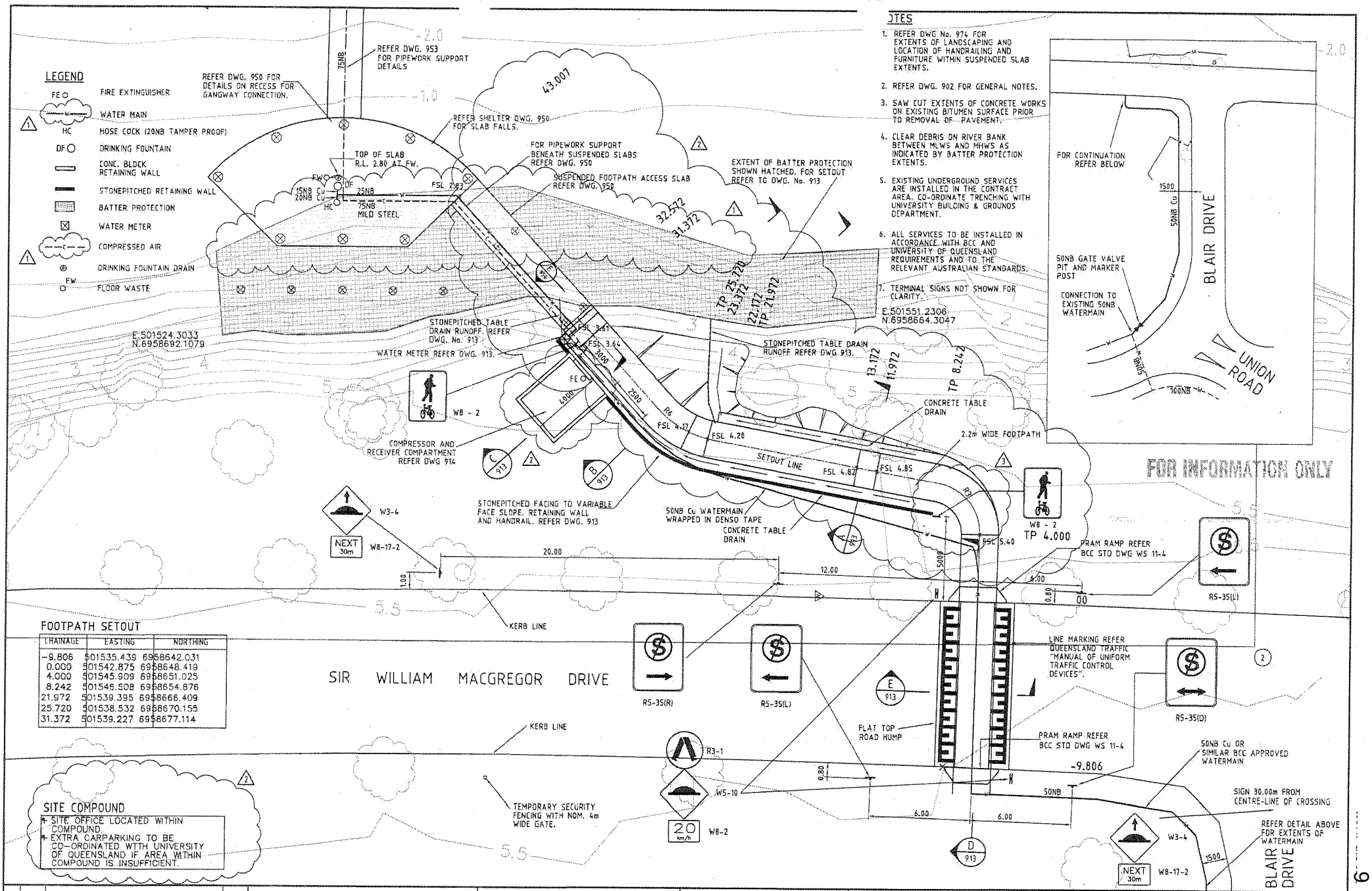

REV.	DATE	DESCRIPTION	P.D.
4	30/4/96	PIPE TYPE CHANGE	D.L.
3	1/4/96	LEADER REPOSITIONED	D.L.
2	25/3/96	FOR CONSTRUCTION ISSUE	D.L.
1	15/12/95	GENERAL REVISION AS CLOUDED	D.L.
0	1/11/95	TENDER ISSUE	D.L.

1:100 0 2 4 6 8m

QUALITY RECORD	NAME	SIGNATURE	DATE
DRAFTER	L.R.M.		
DESIGNER CHECK	P.H./D.L.		
PROJECT DIRECTOR APPROVAL			

MAUNSELL PROPRIETARY LIMITED
Planners & Environmental Scientists.
A.C.N. 004 848 804

CLIENT: Brisbane City — Brisbane Transport

PROJECT TITLE: BRISBANE FERRY TERMINALS
DRG. TITLE: QUEENSLAND UNIVERSITY CIVIL WORKS AND SERVICES PLAN AND DETAILS
DATE OF ISSUE: 25/3/96
SIZE: A1
CAD REFERENCE: J:\23795\DESIGN\B30-912.DWG
DRG. No: B30-912
REV: 4
DRG. STATUS: FOR CONSTRUCTION

BCC 133.0023

FOR INFORMATION ONLY

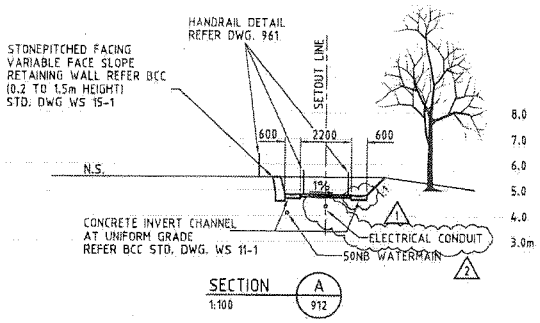

SECTION A 1:100 (912)

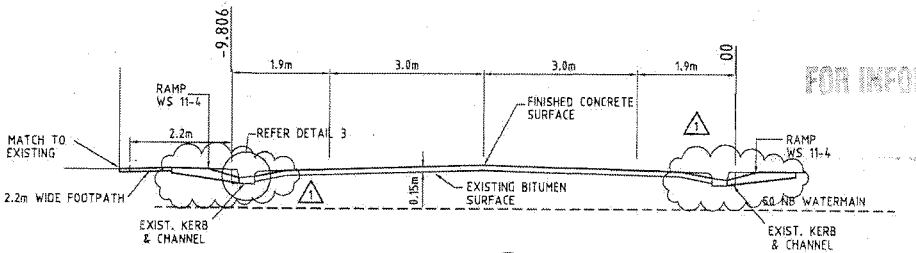

SECTION D 1:50 (912)

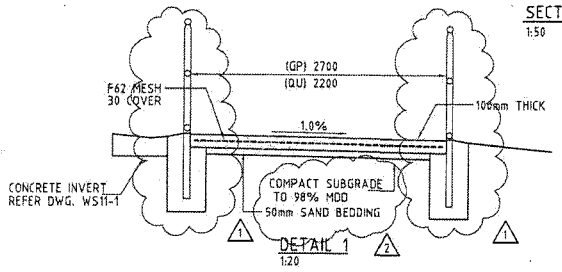

DETAIL 1 1:20

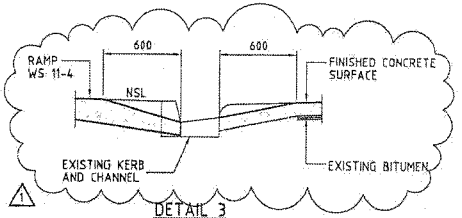

DETAIL 3 1:20

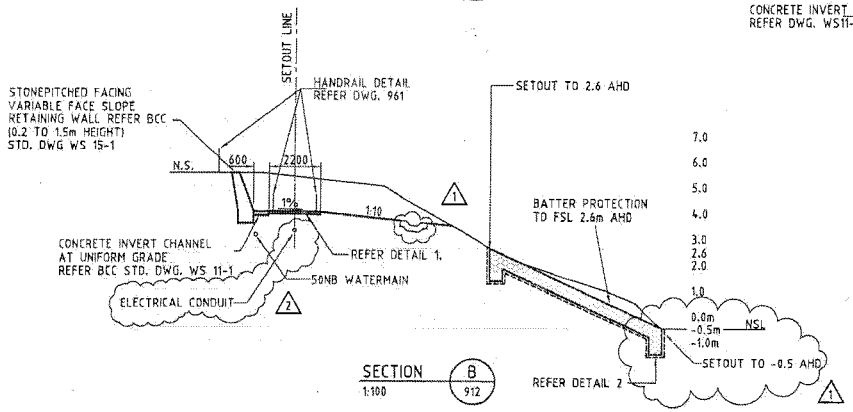

SECTION B 1:100 (912)

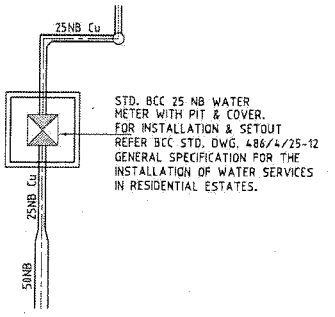

STD. BCC 25 NB WATER METER WITH PIT & COVER. FOR INSTALLATION & SETOUT REFER BCC STD. DWG. 486/4/25-12 GENERAL SPECIFICATION FOR THE INSTALLATION OF WATER SERVICES IN RESIDENTIAL ESTATES.

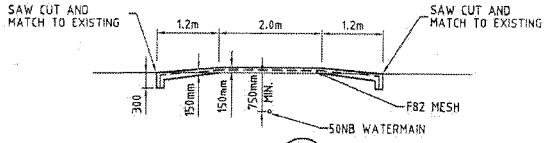

SECTION E 1:50 (912)

NOTES

1. ALL CONCRETE TO BE GRADE N25 U.N.O.
2. ALL CONCRETE TO BE BROOM FINISH AND HAVE A MAXIMUM AGGREGATE SIZE OF 20mm.
3. FINISHED SURFACE TOLERANCE TO BE MAXIMUM 6mm IN 3.0m.
4. PATTEN LINES TO BE SQUARE TO SIDES AND FINISHED WITH APPROVED GROOVING TOOL.
5. LEVELS TO AHD IN METRES U.N.O.
6. CONCRETE PAVEMENTS JOINTS TO BE AS PER BCC STD. DWG. WS 16-2.

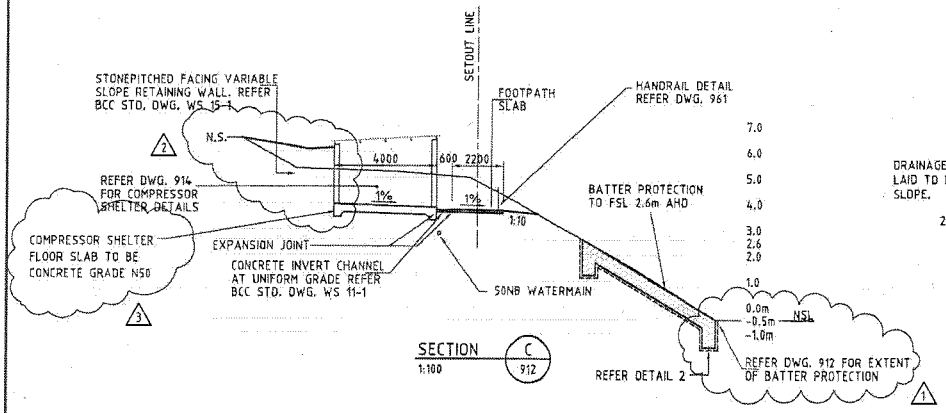

SECTION C 1:100 (912)

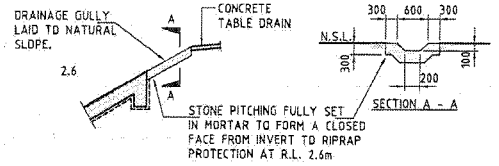

STONEPITCHED TABLE DRAIN RUNOFF DETAIL

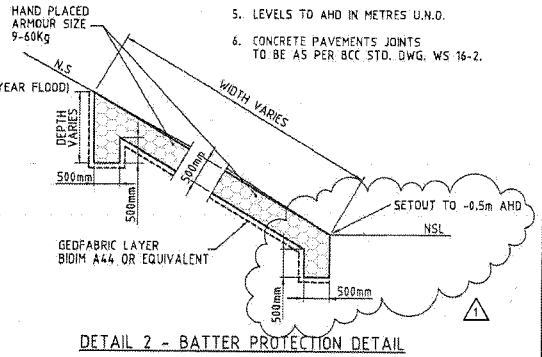

DETAIL 2 - BATTER PROTECTION DETAIL

REV.	DATE	DESCRIPTION	P.D.
3	2/5/96	NOTE ADDED	D.L.
2	25/3/96	ISSUED FOR CONSTRUCTION	D.L.
1	15/12/95	GENERAL REVISION AS CLOUDED	D.L.
0	1/11/95	TENDER ISSUE	D.L.

1:100 2000 0 2000 4000 6000 8000mm
1:50 1000 0 1000 2000 3000 4000mm
1:20 400 0 400 800 1200 1600mm

QUALITY RECORD	NAME	SIGNATURE	DATE
DRAFTER	L.R.M.		
DESIGNER CHECK	P.H./D.L.		
PROJECT DIRECTOR APPROVAL			

MAUNSELL PROPRIETARY LIMITED
Planners & Environmental Specialists.
A.C.N. 004 848 824

CLIENT: Brisbane City — Brisbane Transport

PROJECT TITLE: BRISBANE FERRY TERMINALS
DRG. TITLE: QUEENSLAND UNIVERSITY CIVIL WORKS DETAILS
DATE OF ISSUE: 2/5/96
SIZE: A1
CAD REFERENCE: J:\23795\DESIGN\B30-913.DWG
DRG. No.: B30-913
REV.: 3
DRG. STATUS: FOR CONSTRUCTION

10

BCC 183.0024

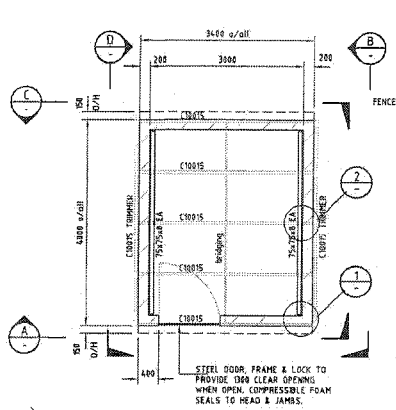

ROOF FRAMING LAYOUT.
1:50

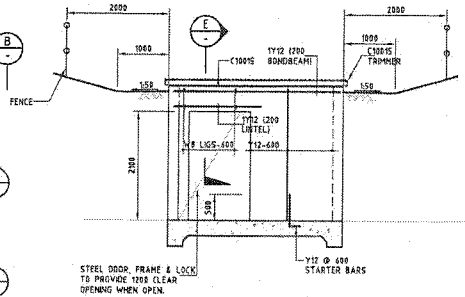

SECTION A
1:50

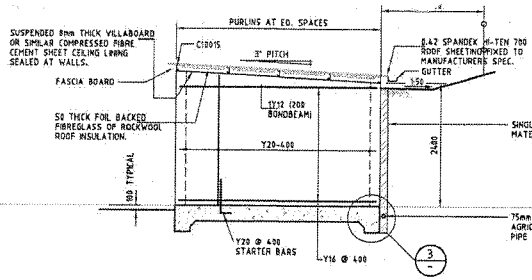

SECTION B
1:50

SECTION D
1:50

SIM. OPP HAND

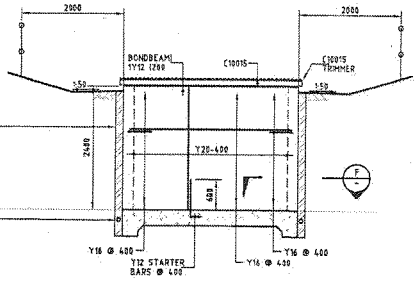

SECTION C
1:50

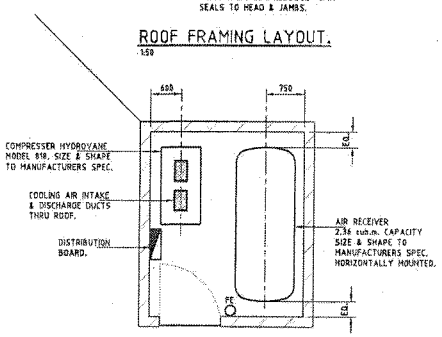

SHELTER FITOUT LAYOUT.
1:50

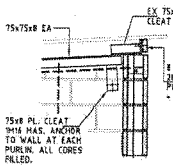

DETAIL 1
1:20

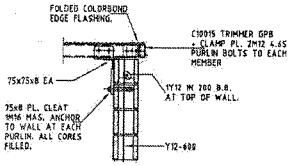

DETAIL 2
1:20

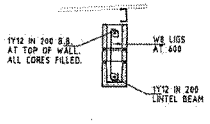

SECTION E
1:20

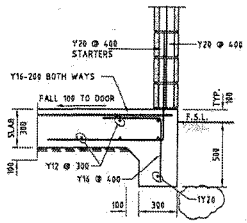

DETAIL 3
1:20
2

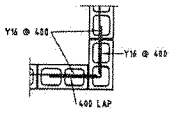

SECTION F
1:20

LEGEND

FE
O – FIRE EXTINGUISHER

FOR INFORMATION ONLY

NOTES
1. COOLING AIR INTAKE & OUTLET FROM COMPRESSER TO BE TAKEN THRU ROOF & FITTED WITH COWLS.
2. OUTSIDE OF BLOCKWORK TO BE PAINTED TO COLOURS AS DIRECTED BY THE ENGINEER TO MATCH REST OF TERMINAL.
3. CONCRETE FLOOR TO BE FLOAT FINISHED.
4. ELECTRICAL CONDUITS AS PER DWG B30-919 TO BE CAST INTO SLAB AND WALLS.
5. THE SOIL FACE OF RETAINING BLOCKWALLS SHALL BE TANKED WITH AN APPROVED BITUMEN COMPOUND BEFORE BACKFILLING.
6. SLAB ON GROUND TO BE LAID ON 2 LAYERS OF POLYETHYLENE SHEETING.
7. REINFORCEMENT IN WALLS TO BE PLACED CENTRALLY

REV.	DATE	DESCRIPTION	P.D.
4	7/96	DIMENSIONS ADDED	
3	6/96	REINFORCEMENT AMMENDED	
2	25/3/96	ISSUED FOR CONSTRUCTION	D.L.
1	15/12/95	GENERAL REVISION AS CLOUDED	D.L.
0	1/11/95	TENDER ISSUE	D.L.

1:50 1000 0 1000 2000 3000 4000mm
1:20 400 0 400 800 1200 1600mm

QUALITY RECORD	NAME	SIGNATURE	DATE
DRAFTER	D.M.		
DESIGNER CHECK	L.T.		
PROJECT DIRECTOR APPROVAL			

MAUNSELL PROPRIETARY LIMITED
Planners & Environmental Specialists.
A.C.N. 004 848 824

CLIENT.
Brisbane City
Brisbane Transport

PROJECT TITLE
BRISBANE FERRY TERMINALS

DRG. TITLE
QUEENSLAND UNIVERSITY
COMPRESSOR SHELTER DETAILS

DATE OF ISSUE: JULY 96
SIZE: A1
CAD REFERENCE: J:/23795/DESIGN/B30-914.DWG
DRG. No.: B30-914
REV.: 4
DRG. STATUS: FOR CONSTRUCTION

BCC 1310025

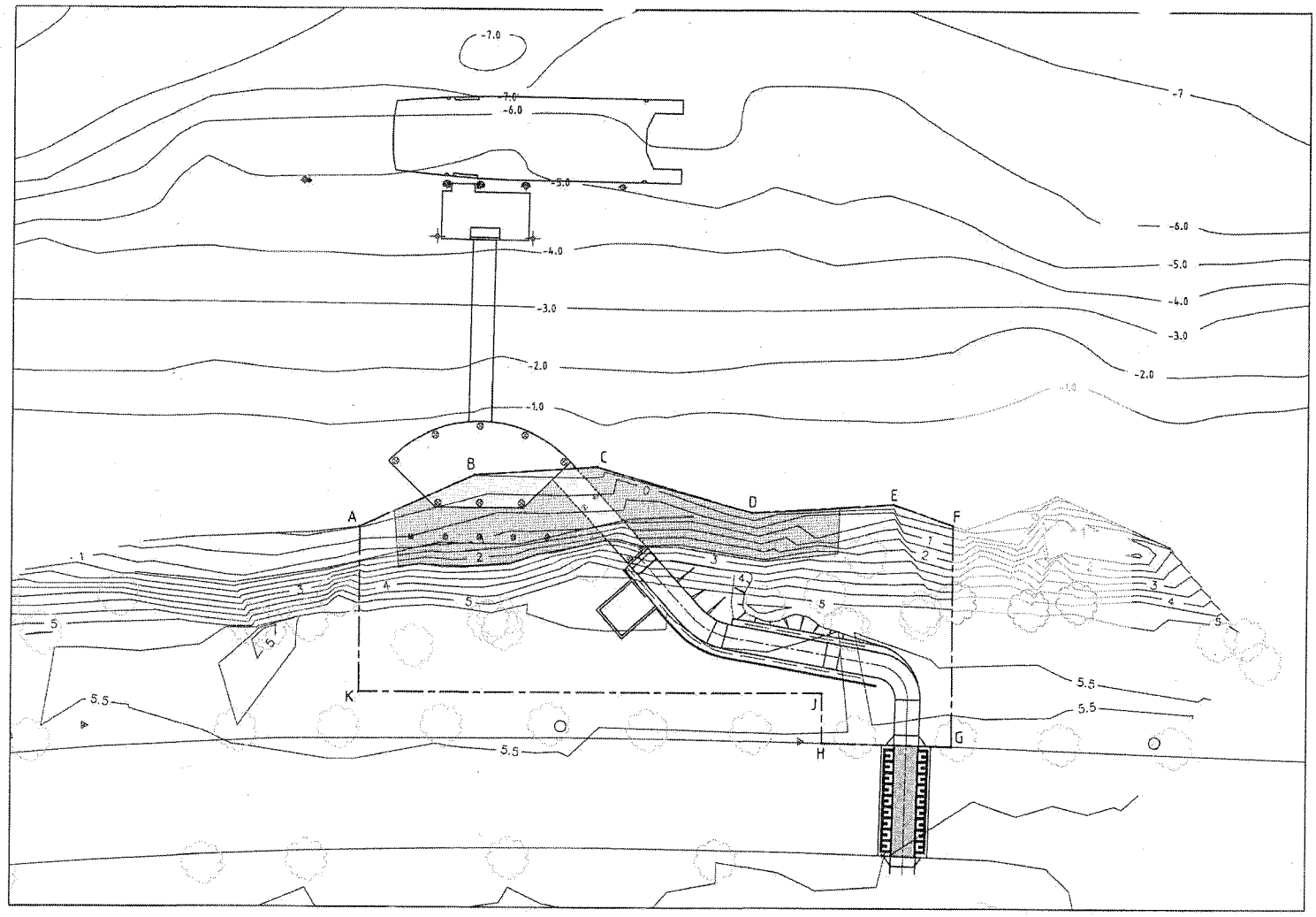

SITE BOUNDARY LAYOUT
1:200

SITE BOUNDARY SETOUT

POINT No.	EASTING	NORTHING
A	501524.631	6958697.073
B	501534.863	6958692.669
C	501542.589	6958685.181
D	501548.815	6958672.282
E	501557.754	6958663.561
F	501559.902	6958658.402
G	501545.479	6958645.394
H	501537.981	6958654.117
J	501541.204	6958657.024
K	501513.851	6958687.351

FOR INFORMATION ONLY

REV.	DATE	DESCRIPTION	P.O.

QUALITY RECORD	NAME	SIGNATURE	DATE
DRAFTER	D.M.		
DESIGNER CHECK	I.P.C.R.		
PROJECT DIRECTOR APPROVAL			

MAUNSELL PROPRIETARY LIMITED
Planners & Environmental Scientists.
A.C.N. 004 848 824

CLIENT: Brisbane City; Brisbane Transport

PROJECT TITLE: BRISBANE FERRY TERMINALS
DRG. TITLE: QUEENSLAND UNIVERSITY SITE BOUNDARY DETAILS

DATE OF ISSUE: 20/12/95 | SIZE: A1
CAD REFERENCE: J:\23795\DESIGN\B30-915.DWG
DRG. No: B30-915 | REV.: A
DRG. STATUS: DRAFT

BCC.1310026

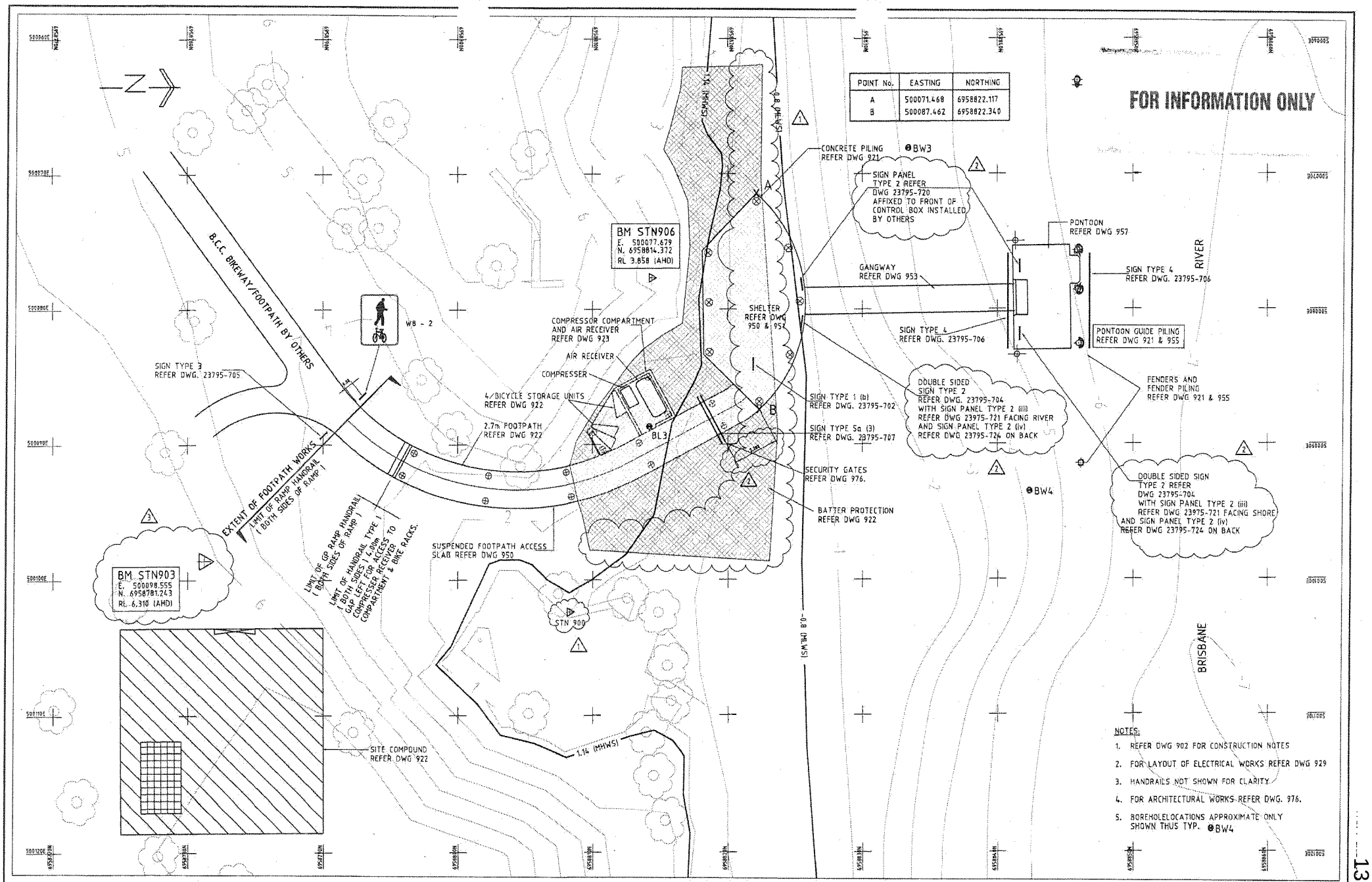

REV.	DATE	DESCRIPTION	P.D.
3	9/4/96	STATION 903 REVISED	D.L.
2	25/3/96	ISSUED FOR CONSTRUCTION	D.L.
1	15/12/95	GENERAL REVISION AS CLOUDED	D.L.
0	1/11/95	TENDER ISSUE	D.L.

1:125 0 2.5 5 7.5 10m (FULL SIZE)

QUALITY RECORD	NAME	SIGNATURE	DATE
DRAFTER	L.M.		
DESIGNER CHECK	P.H./D.L.		
PROJECT DIRECTOR APPROVAL			

MAUNSELL PROPRIETARY LIMITED
Planners & Environmental Scientists.
A.C.N. 004 848 884

CLIENT: Brisbane City — Brisbane Transport

PROJECT TITLE: BRISBANE FERRY TERMINALS
ORG. TITLE: GUYATT PARK GENERAL ARRANGEMENT
DATE OF ISSUE: 9/4/96
SIZE: A1
CAD REFERENCE: J:\23795\DESIGN\B30-920.DWG
DRG. No.: B30-920
REV.: 3
DRG. STATUS: FOR CONSTRUCTION

BCC.199.0027

NOTE:
1. TOE LEVELS CORRESPOND TO MINIMUM PILE PENETRATION.
2. FOR 450mm PSC PILE HEAD PREPARATION REFER DWG. 952.
3. "ULTIMATE PILE CAPACITY" IN THE TABLES HAS BEEN SPECIFIED IN ACCORDANCE WITH AS2159-1978 AND CORRESPONDS TO THE MINIMUM TEST VALUE TO BE ACHIEVED BY HILEY CALCULATION ON ANY PILE WHEN ALL PILES PRE TESTED USING HILEY.
4. ALL CONCRETE PILES MUST EXTEND AT LEAST TO THE "HIGHEST TOE LEVEL" SHOWN ON THE TABLE. IN ADDITION THEY MUST BE DRIVEN TO A PENETRATION TO ACHIEVE THE ULTIMATE AXIAL GEOTECHNICAL STRENGTH.
5. THE STEEL PILES ARE TO BE INSTALLED TO THE "REQUIRED TOE LEVEL" AS SHOWN ON THE DRAWINGS

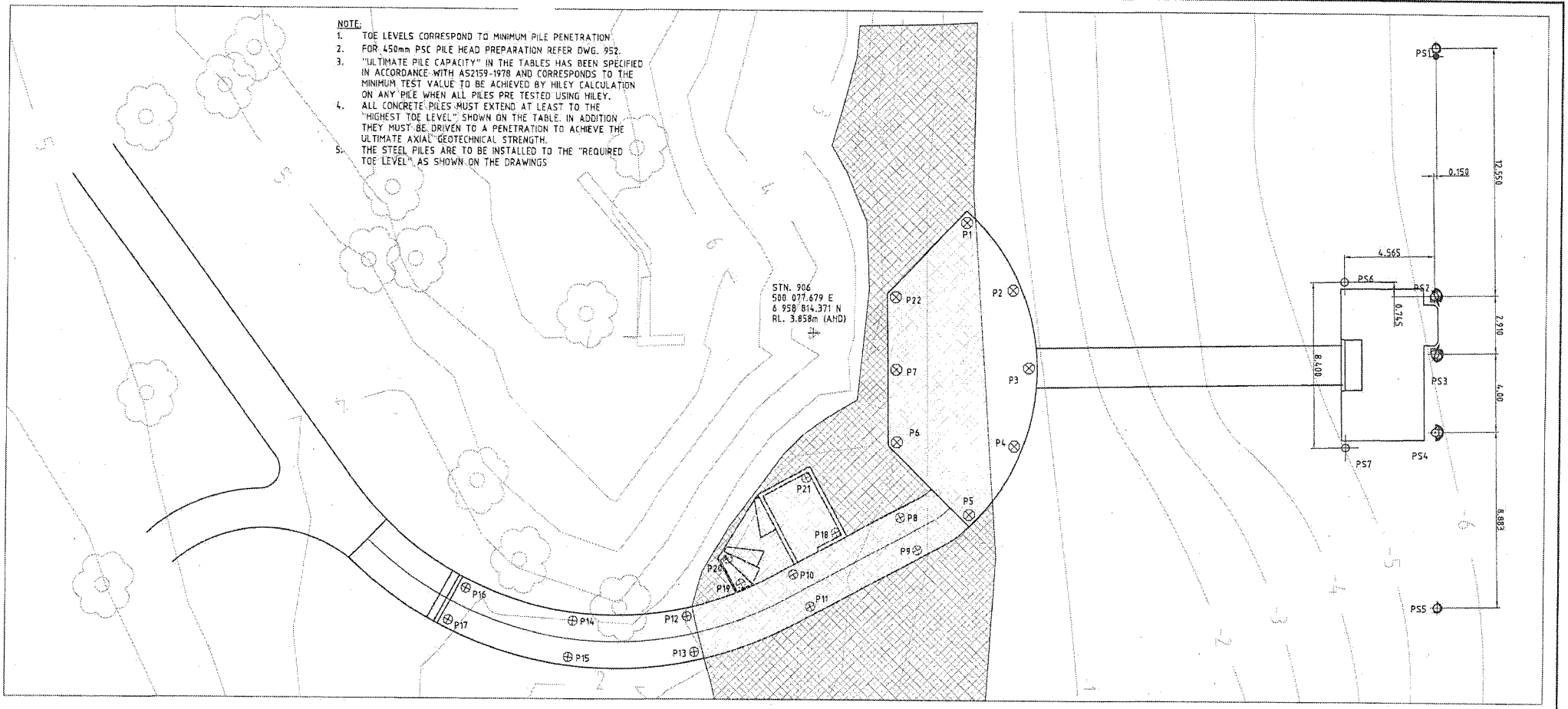

450mm PRESTRESSED CONCRETE PILING SCHEDULE

- REFER MAIN ROADS STD. DRAWING No. S1058 FOR OCTAGONAL CONCRETE PILE DETAILS

PILE SCHEDULE ALL LEVELS GIVEN IN METRES TO A.H.D.					CO-ORDINATES		ULTIMATE PILE CAPACITY (REFER NOTE 3)
MARK.	SIZE	CUT-OFF LEVEL	GROUND OR BED LEVEL	TOE LEVEL	EASTING	NORTHING	kN
P1.	550	2.375	-0.5	-10.55	500072.069	6958822.132	675
P2.	"	2.375	-1.0	-10.55	500075.485	6958824.506	675
P3.	"	2.075	-1.0	-10.85	500079.424	6958825.348	675
P4.	"	2.375	-1.0	-10.55	500083.384	6958824.616	675
P5.	"	2.375	-0.5	-10.55	500086.865	6958822.338	675
P6.	"	2.375	0.5	-9.55	500083.192	6958818.646	675
P7.	"	2.375	0.5	-9.55	500079.518	6958818.589	675
P8.	450	2.535	0.5	-9.0	500087.018	6958818.837	450
P9.	"	2.535	0.0	-9.0	500088.649	6958819.711	450

GUYATT PARK TERMINAL - GENERAL PILING ARRANGEMENT

MARK.	SIZE	CUT-OFF LEVEL	GROUND OR BED LEVEL	TOE LEVEL	EASTING	NORTHING	kN
P10.	450	2.535	1.5	-6.0	500089.903	6958813.454	450
P11.	450	2.535	1.0	-6.0	500091.534	6958814.328	450
P12.	450	2.81	2.0	-6.0	500092.040	6958808.038	450
P13.	450	2.81	2.0	-6.0	500093.850	6958808.424	450
P14.	450	3.30	3.0	-5.0	500092.277	6958802.280	450
P15.	450	3.30	2.5	-5.0	500094.112	6958802.043	450
P16.	450	3.30	3.0	-5.0	500090.614	6958796.793	450
P17.	450	3.30	3.0	-5.0	500092.236	6958795.904	450
P18.	450	2.55	2.0	-6.0	500087.802	6958815.576	450
P19.	450	2.55	2.0	-6.0	500090.377	6958810.773	450
P20.	450	2.55	2.0	-6.0	500089.117	6958810.097	450
P21.	450	2.55	2.0	-6.0	500085.025	6958814.088	450
P22	550	2.375	0.5	-9.55	500075.844	6958818.544	675

STEEL PILING SCHEDULE - REFER DRAWING B30-955 FOR STEEL PILE DETAILS.

PILE SCHEDULE ALL LEVELS GIVEN IN METRES TO A.H.D.					CO-ORDINATES		LENGTH OF PLATING	DISTANCE FROM TOE
MARK.	PILE TYPE	CUT-OFF LEVEL	GROUND OR BED LEVEL	TOE LEVEL	EASTING	NORTHING	Lp	Lt
PS1.	D	3.60	-6.0	-15.0	500063.132	6958845.906		
PS2.	C2	6.85	-6.0	-15.0	500075.683	6958845.926		
PS3.	C1	6.85	-6.0	-15.0	500078.593	6958845.965		
PS4.	B	6.85	-6.0	-15.0	500082.592	6958846.019		
PS5.	E3	3.60	-6.0	-15.0	500091.475	6958846.169		
PS6.	A1	6.85	-5.0	-15.0	500075.000	6958841.351	6.5	4
PS7.	A1	6.85	-5.0	-15.0	500083.399	6958841.465	6.5	4

FOR INFORMATION ONLY

REV.	DATE	DESCRIPTION	P.D.
5	28/6/96	PONTOON PILE COORD AMENDED	D.L.
4	22/4/96	SHELTER PILES AMENDED	D.L.
3	17/4/96	SHELTER PILES COORDINATES AND PILE CUT OFF LEVELS AMENDED	D.L.
2	25/3/96	FOR CONSTRUCTION ISSUE	D.L.
1	15/12/95	GENERAL REVISION AS CLOUDED	D.L.
0	1/11/95	TENDER ISSUE	D.L.

1:100 0 2 4 6 8m (FULL SIZE)

QUALITY RECORD	NAME	SIGNATURE	DATE
DRAFTER	L.M.		
DESIGNER CHECK	P.H./D.L.		
PROJECT DIRECTOR APPROVAL	G.J.H		

MAUNSELL PROPRIETARY LIMITED
Planners & Environmental Scientists.
A.C.N. 004 848 884

CLIENT: Brisbane City — Brisbane Transport

PROJECT TITLE: BRISBANE FERRY TERMINALS
DRG. TITLE: GUYATT PARK GENERAL ARRANGEMENT PILING SCHEDULE & SETTING OUT.
DATE OF ISSUE: JULY 96
SIZE: A1
CAD REFERENCE: J:\23795\DESIGN\B30-921.DWG
DRG. No.: B30-921
REV.: 5
DRG. STATUS: FOR CONSTRUCTION

BCC.199.0028

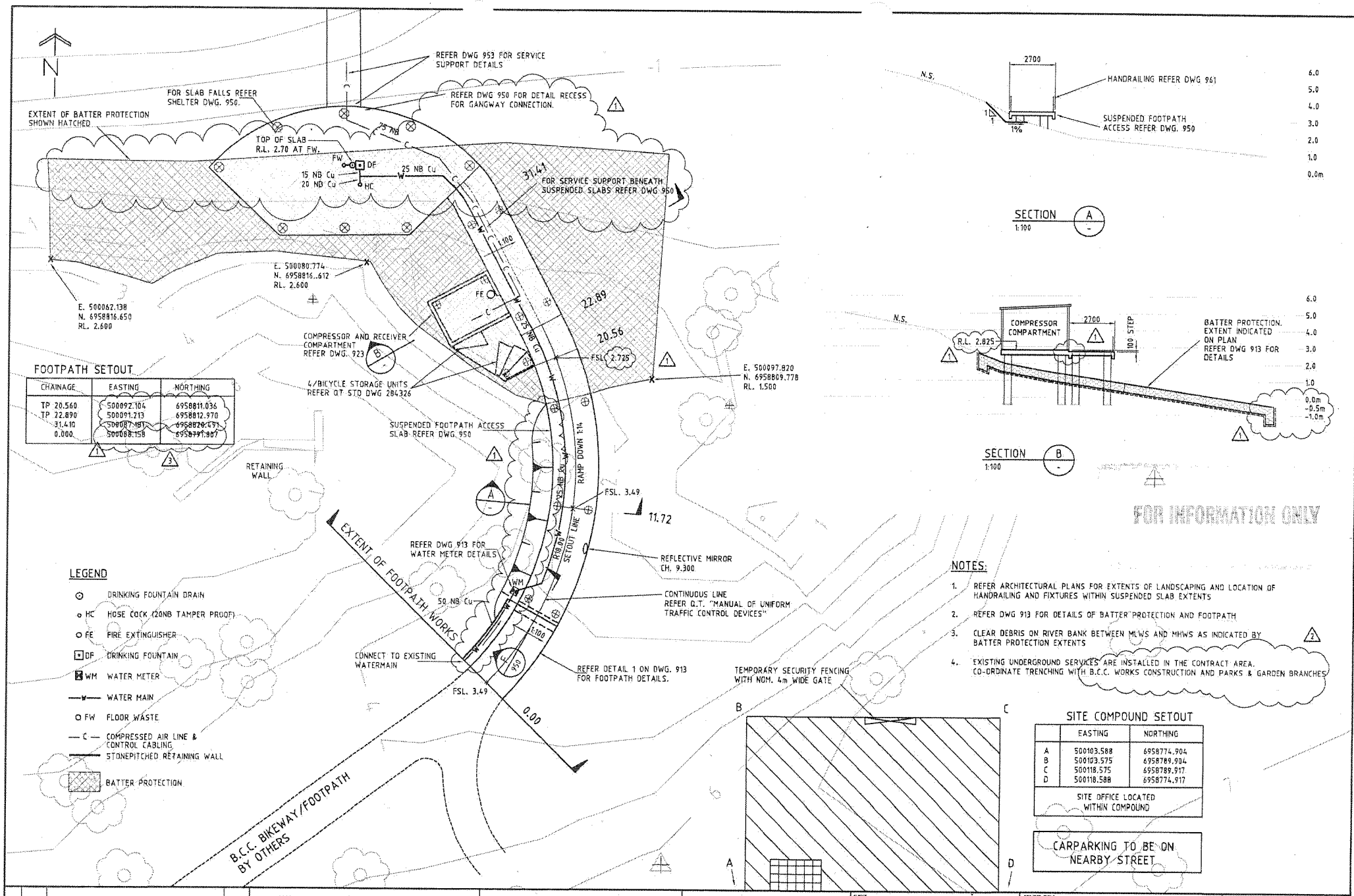

FOOTPATH SETOUT

CHAINAGE	EASTING	NORTHING
TP 20.560	500092.104	6958811.036
TP 22.890	500091.213	6958812.970
31.410	500087.181	6958820.491
0.000	500088.158	6958791.807

LEGEND

- DRINKING FOUNTAIN DRAIN
- HC HOSE COCK (20NB TAMPER PROOF)
- FE FIRE EXTINGUISHER
- DF DRINKING FOUNTAIN
- WM WATER METER
- W WATER MAIN
- FW FLOOR WASTE
- C COMPRESSED AIR LINE & CONTROL CABLING
- STONEPITCHED RETAINING WALL
- BATTER PROTECTION

NOTES:

1. REFER ARCHITECTURAL PLANS FOR EXTENTS OF LANDSCAPING AND LOCATION OF HANDRAILING AND FIXTURES WITHIN SUSPENDED SLAB EXTENTS
2. REFER DWG 913 FOR DETAILS OF BATTER PROTECTION AND FOOTPATH
3. CLEAR DEBRIS ON RIVER BANK BETWEEN MLWS AND MHWS AS INDICATED BY BATTER PROTECTION EXTENTS
4. EXISTING UNDERGROUND SERVICES ARE INSTALLED IN THE CONTRACT AREA. CO-ORDINATE TRENCHING WITH B.C.C. WORKS CONSTRUCTION AND PARKS & GARDEN BRANCHES

SITE COMPOUND SETOUT

	EASTING	NORTHING
A	500103.588	6958774.904
B	500103.575	6958789.904
C	500118.575	6958789.917
D	500118.588	6958774.917

SITE OFFICE LOCATED WITHIN COMPOUND

CARPARKING TO BE ON NEARBY STREET

REV.	DATE	DESCRIPTION	P.D.
4	7/96	CO-ORDS AND R.L.'s CHANGED	
3	16/4/96	CHAINAGE POINT 0.00 COORDINATES ADDED	D.L.
2	25/3/96	ISSUED FOR CONSTRUCTION	D.L.
1	15/12/95	GENERAL REVISION AS CLOUDED	D.L.
0	1/11/95	TENDER ISSUE	D.L.

1:100 2000 0 2000 4000 6000 8000mm
1:200 4000 0 4000 8000 12000 16000mm

QUALITY RECORD	NAME	SIGNATURE	DATE
DRAFTER	L.R.M.		
DESIGNER CHECK	P.H./D.L.		
PROJECT DIRECTOR APPROVAL			

MAUNSELL PROPRIETARY LIMITED
Planners & Environmental Specialists
A.C.N. 004 848 854

CLIENT: Brisbane City — Brisbane Transport

PROJECT TITLE: BRISBANE FERRY TERMINALS
DRG. TITLE: GUYATT PARK CIVIL WORKS AND SERVICES PLAN AND DETAILS
DATE OF ISSUE: JULY 96
SIZE: A1
CAD REFERENCE: J:\23795\DESIGN\B30-922.DWG
DRG. No: B30-922
REV: 4
DRG. STATUS: FOR CONSTRUCTION

15

BCC 1310029

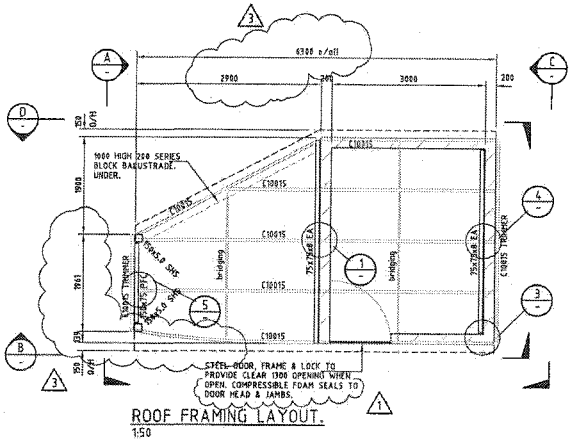

ROOF FRAMING LAYOUT.
1:50

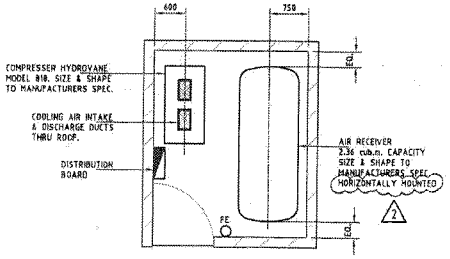

SHELTER FITOUT LAYOUT.

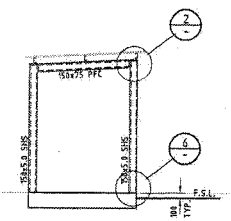

SECTION A
1:50

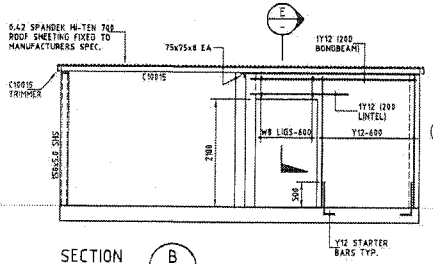

SECTION B
1:50

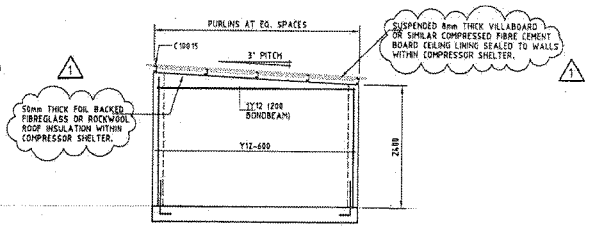

SECTION C
1:50

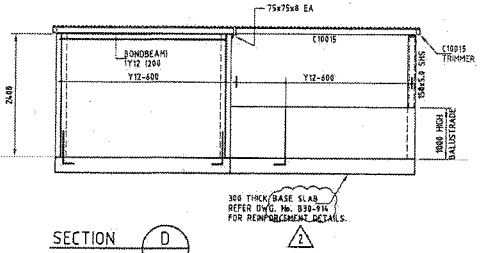

SECTION D
1:50

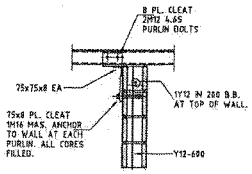

DETAIL 1
1:20

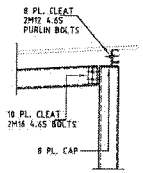

DETAIL 2
1:20

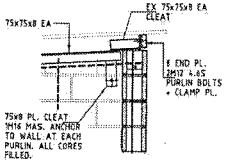

DETAIL 3
1:20

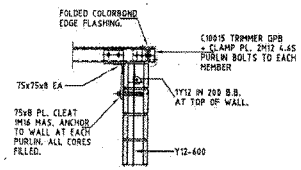

DETAIL 4
1:20

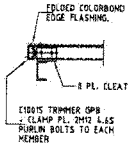

DETAIL 5
1:20

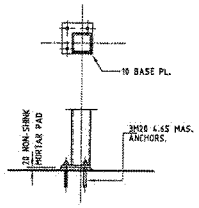

DETAIL 6
1:20

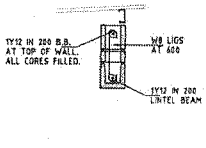

SECTION E
1:20

FOR INFORMATION ONLY

LEGEND

FE - FIRE EXTINGUISHER TYPE 40BE IN ACCORDANCE WITH AS 2444

NOTES

1. REFER TO DWG. No. 902 FOR CONSTRUCTION NOTES.
2. FOR SETOUT OF COMPRESSOR & RECIEVER SHELTER, REFER DWG No. 922
3. COOLING AIR INTAKE & OUTLET FROM COMPRESSER TO BE TAKEN THRU ROOF & FITTED WITH COWLS.
4. OUTSIDE OF BLOCKWORK TO BE PAINTED TO COLOURS AS DIRECTED BY THE ENGINEER, TO MATCH REST OF TERMINAL
5. CONCRETE FLOOR INSIDE SHELTER TO BE FLOAT FINISHED
6. ELECTRICAL CONDUITS AS PER DWG B30-929 TO BE CAST INTO SLAB & WALLS

REV.	DATE	DESCRIPTION	P.D.
3	2/5/96	ROOF FRAMING LAAYOUT AMENDED	D.L.
2	25/3/96	ISSUED FOR CONSTRUCTION	D.L.
1	15/12/95	GENERAL REVISION AS CLOUDED	D.L.
0	1/11/95	TENDER ISSUE	D.L.

1:50 1000 0 1000 2000 3000 4000mm

1:20 400 0 400 800 1200 1600mm

QUALITY RECORD	NAME	SIGNATURE	DATE
DRAFTER	D.M.		
DESIGNER CHECK	L.T.		
PROJECT DIRECTOR APPROVAL			

MAUNSELL PROPRIETARY LIMITED
Planners & Environmental Scientists
A.C.N. 004 548 024

CLIENT
Brisbane City
Brisbane Transport

PROJECT TITLE: BRISBANE FERRY TERMINALS
DRG. TITLE: GUYATT PARK TERMINAL COMPRESSER SHELTER DETAILS

DATE OF ISSUE: 2/5/96
SIZE: A1
CAD REFERENCE: J:/23795/DESIGN/B30-923.DWG
DRG. No.: B30-923
REV.: 3
DRG. STATUS: FOR CONSTRUCTION

BCC.133.0030

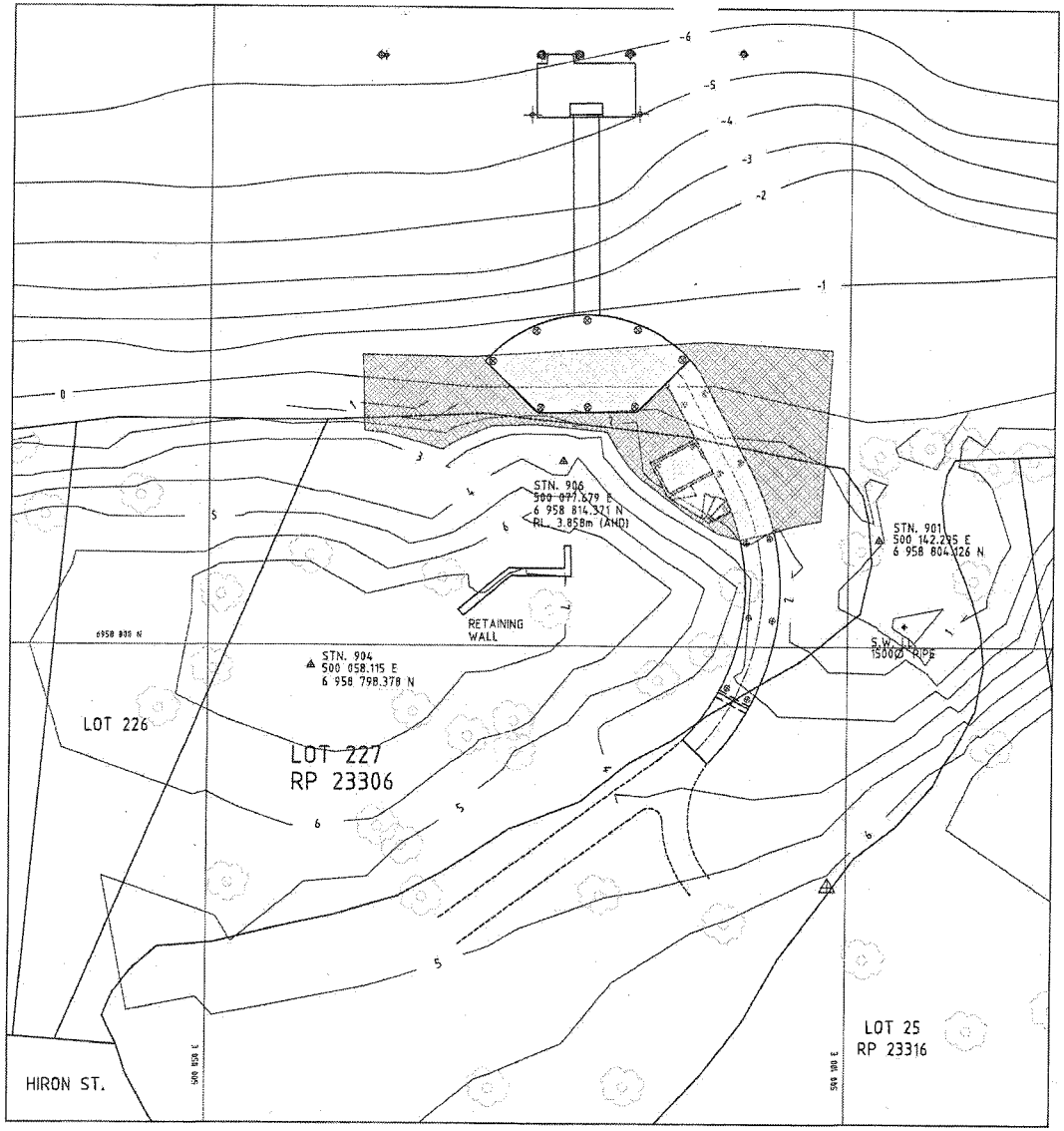

GUYATT PARK R.P. PLAN
1:200

LOT	-	227
PLAN	-	RP 23306
AREA	-	981 sq.m.
TENURE	-	FH
LOCAL GOVERNMENT	-	BRISBANE
LOCALITY	-	ST. LUCIA
PARISH	-	INDOOROOPILLY
COUNTY	-	STANLEY

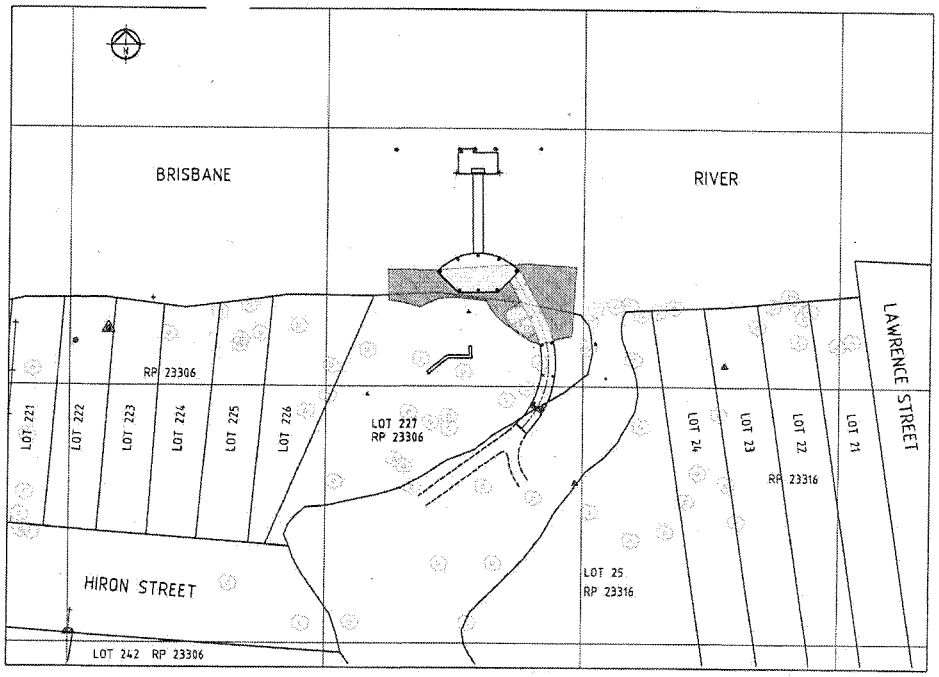

GUYATT PARK LOCALITY PLAN
1:500

FOR INFORMATION ONLY

REV.	DATE	DESCRIPTION	P.D.
1	25/3/96	ISSUED FOR CONSTRUCTION	D.L.
0	15/12/95	TENDER ISSUE	

1:500 10000 0 10000 20000 30000 40000mm
1:200 4000 0 4000 8000 12000 16000mm

QUALITY RECORD	NAME	SIGNATURE	DATE
DRAFTER	D.M.		
DESIGNER CHECK	I.P.C.R.		
PROJECT DIRECTOR APPROVAL			

MAUNSELL PROPRIETARY LIMITED
Planners & Environmental Scientists
A.C.N. 004 848 824

CLIENT: Brisbane City, Brisbane Transport

PROJECT TITLE: BRISBANE FERRY TERMINALS
DRG. TITLE: R.P. & LOCALITY PLANS GUYATT PARK TERMINAL

DATE OF ISSUE: 25/3/96 | SIZE: A1
CAD REFERENCE: 23795\GUYATT\B30-924.DWG
DRG. No.: B30-924 | REV.: 1
DRG. STATUS: FOR CONSTRUCTION

BCC.133.0031

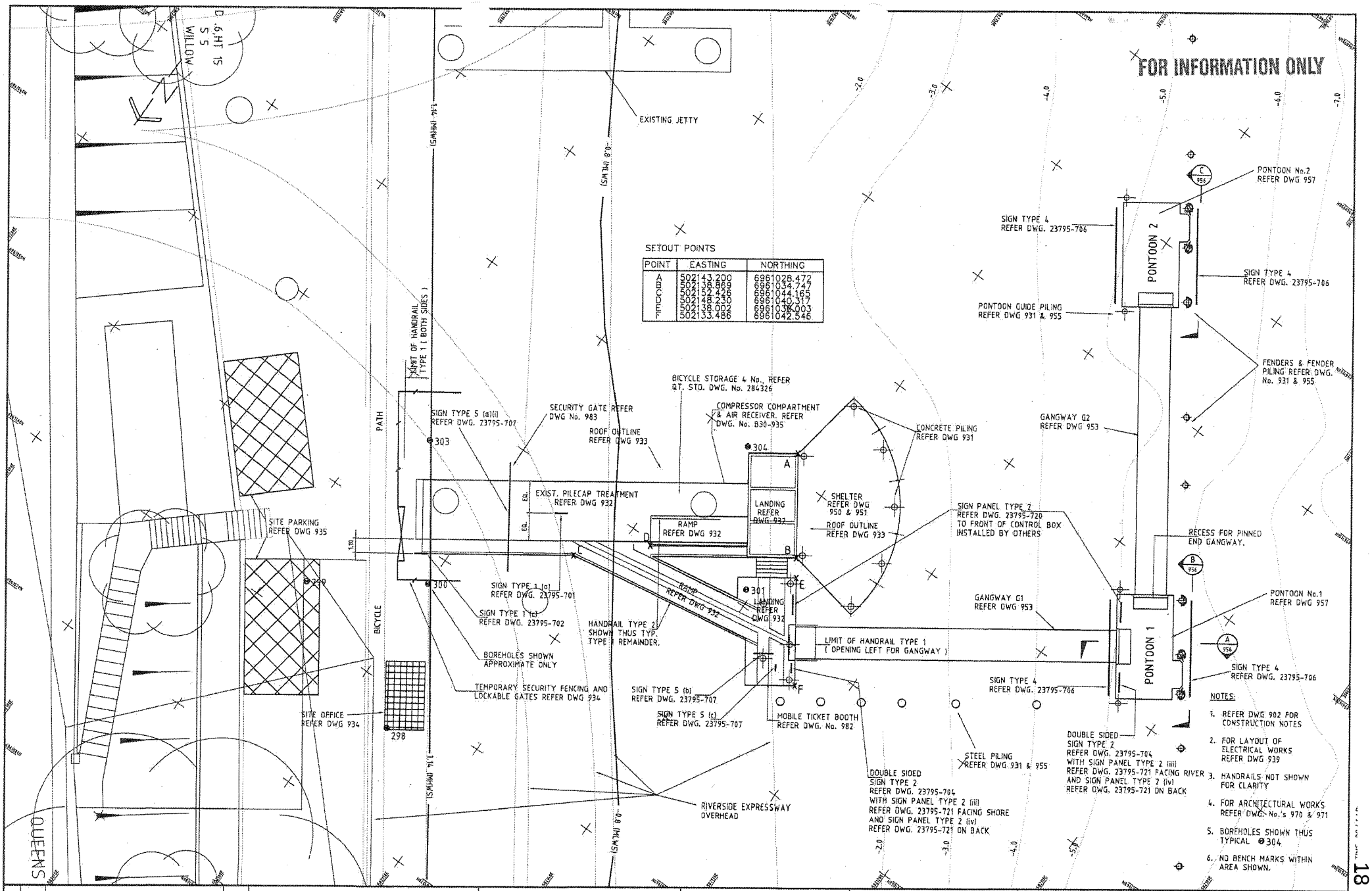

REV.	DATE	DESCRIPTION	P.D.
3	6/96	SETOUT POINTS AMENDED	D.L.
2	25/3/96	ISSUED FOR CONSTRUCTION	D.L.
1	15/12/95	GENERAL REVISION AS CLOUDED	D.L.
0	1/11/95	TENDER ISSUE	D.L.

1:125 0 2.5 5 7.5 10m (FULL SIZE)

QUALITY RECORD	NAME	SIGNATURE	DATE
DRAFTER	L.R.M.		
DESIGNER CHECK	P.H./D.L.		
PROJECT DIRECTOR APPROVAL			

MAUNSELL PROPRIETARY LIMITED
Planners & Environmental Scientists
A.C.N. 004 845 884

CLIENT: Brisbane City / Brisbane Transport

PROJECT TITLE: BRISBANE FERRY TERMINALS
DRG. TITLE: NORTH QUAY GENERAL ARRANGEMENT
DATE OF ISSUE: JUNE 96
SIZE: A1
CAD REFERENCE: J:\23795\DESIGN\B30-930.DWG
DRG. No.: B30-930
REV.: 3
DRG. STATUS: FOR CONSTRUCTION

BCC.133.0032

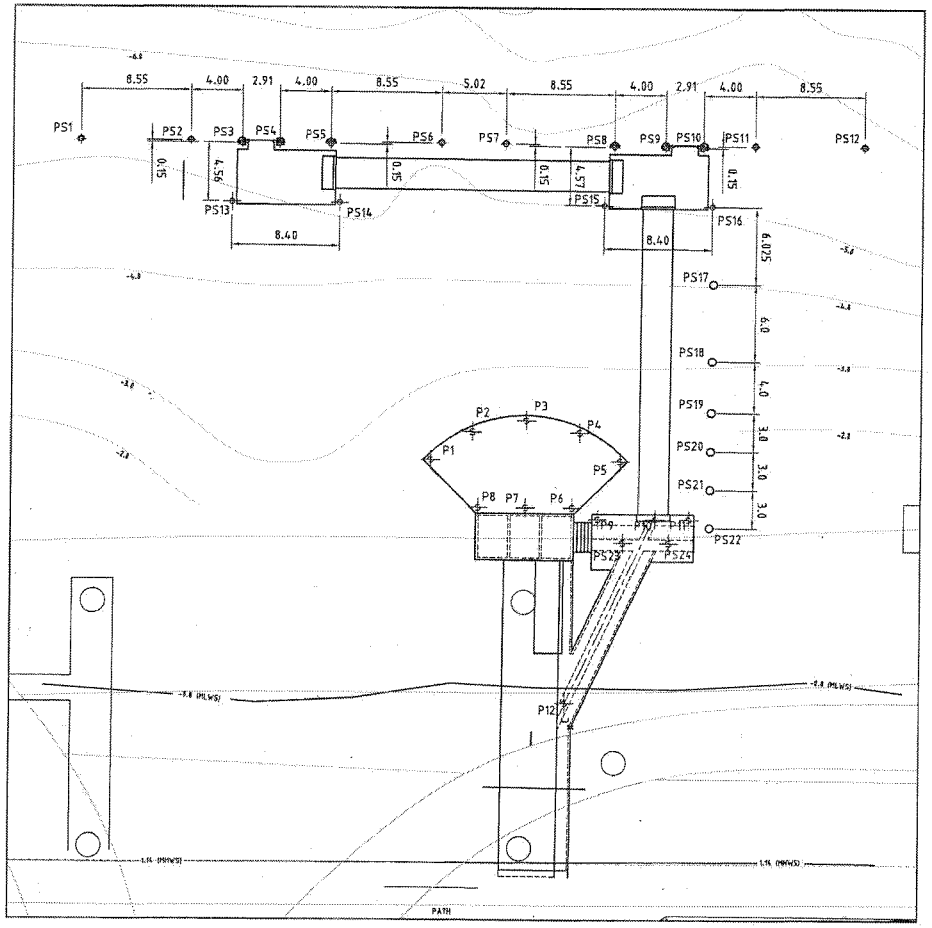

NORTH QUAY TERMINAL - GENERAL PILING ARRANGEMENT

NOTES:
1. TOE LEVELS CORRESPOND TO MINIMUM PILE PENETRATION
2. FOR 450mm PSC PILE HEAD PREPARATION REFER DWG. 952.
3. "ULTIMATE PILE CAPACITY" IN THE TABLES HAS BEEN SPECIFIED IN ACCORDANCE WITH AS2159-1978 AND CORRESPONDS TO THE MINIMUM TEST VALUE TO BE ACHIEVED BY HILEY CALCULATION ON ANY PILE WHEN ALL PILES PRE TESTED USING HILEY.
4. ALL CONCRETE PILES MUST EXTEND AT LEAST TO THE "HIGHEST TOE LEVEL" SHOWN ON THE TABLE. IN ADDITION THEY MUST BE DRIVEN TO A PENETRATION TO ACHIEVE THE ULTIMATE AXIAL GEOTECHNICAL STRENGTH.
5. THE STEEL PILES ARE TO BE INSTALLED TO THE "REQUIRED TOE LEVEL" AS SHOWN ON THE DRAWINGS

450mm P... PRESSED
CONCRETE PILING SCHEDULE - REFER MAIN ROADS STD. DRAWING No. S1058 FOR OCTAGONAL CONCRETE PILE DETAILS

PILE SCHEDULE ALL LEVELS GIVEN IN METRES TO A.H.D.					CO-ORDINATES		ULTIMATE PILE CAPACITY (REFER NOTE 3)
MARK.	NOM. WIDTH	CUT-OFF LEVEL	GROUND OR BED LEVEL	TOE LEVEL	EASTING	NORTHING (4)	kN
P1.	550	2.12	-2.0	-13.0	502141.893	6961023.189	450
P2.	550	2.12	-2.0	-13.0	502138.236	6961024.566	450
P3.	550	2.12	-2.0	-13.0	502135.114	6961027.523	450
P4.	550	2.12	-2.0	-13.0	502133.457	6961031.491	450
P5.	550	2.12	-2.0	-13.0	502133.466	6961035.398	450
P6.	550	1.77	-1.0	-13.0	502138.589	6961034.404	450
P7.	550	1.77	-1.0	-13.0	502140.685	6961031.368	450
P8.	550	1.77	-1.0	-13.0	502142.780	6961028.332	450
P9.	450	0.95	-1.0	-13.0	502138.139	6961036.553	450
P10.	450	0.95	-1.0	-13.0	502135.590	6961040.245	450
P11.	450	0.95	-1.0	-13.0	502134.106	6961042.396	450
P12.	450	1.3	0.0	-13.0	502151.275	6961042.714	450

STEEL PILING SCHEDULE - REFER DRAWING B30-955 FOR STEEL PILE DETAILS.

PILE SCHEDULE ALL LEVELS GIVEN IN METRES TO A.H.D.						CO-ORDINATES		PILE CAPACITY	LENGTH OF PLATING	DISTANCE FROM TOE
MARK.	PILE TYPE	RAKE	CUT-OFF LEVEL	GROUND OR BED LEVEL	TOE LEVEL	EASTING	NORTHING	BY HILEY kN	Lp	Lt
PS1.	E2		3.6	-5.0	-18.0	502137.286	6960986.527			
PS2.	E1		3.6	-5.5	-18.0	502132.430	6960993.563			
PS3.	C2		8.1	-5.5	-18.0	502130.281	6960996.941			
PS4.	C1		8.1	-5.5	-18.0	502128.678	6960999.336			
PS5.	B		8.1	-5.5	-18.0	502126.356	6961002.628			
PS6.	E1		3.6	-5.5	-18.0	502121.376	6961009.579			
PS7.	E1		3.6	-6.0	-18.0	502118.523	6961013.712			
PS8.	B		8.1	-6.0	-18.0	502113.790	6961020.834			
PS9.	C2		8.1	-5.5	-18.0	502111.518	6961024.126			
PS10.	C1		8.1	-5.5	-18.0	502109.865	6961026.521			
PS11.	E1		3.6	-5.5	-18.0	502107.469	6961029.727			
PS12.	E3		3.6	-6.0	-18.0	502102.613	6961036.764			
PS13.	A1		8.1	-5.0	-18.0	502134.461	6960998.921		7.5	6
PS14.	A1		8.1	-5.0	-18.0	502129.690	6961005.834		7.5	6
PS15.	A1		8.1	-5.0	-18.0	502117.970	6961022.814		7.5	6
PS16.	A1		8.1	-5.0	-18.0	502113.199	6961029.727		7.5	6
PS17.	A2		3.3	-4.0	-17.0	502118.062	6961033.287			
PS18.	A2		3.3	-3.0	-16.0	502123.004	6961036.689			
PS19.	A2		3.3	-2.0	-15.0	502126.300	6961038.956			
PS20.	A2		3.3	-1.0	-14.0	502128.772	6961040.656			
PS21.	A2		3.3	-1.0	-14.0	502131.241	6961042.360			
PS22.	A2		3.3	0.0	-13.0	502133.712	6961044.061			
PS23		1:4	1.05	0.0	-13.0 *	502138.533	6961039.221	450		
PS24		1:4	1.05	0.0	-13.0 *	502136.501	6961042.165	450		

FOR INFORMATION ONLY

REV.	DATE	DESCRIPTION	P.D.
7	7/96	PILE CO-ORDINATES AMENDED	
6	6/96	PILE CO-ORDINATES AMENDED	
5	28/5/96	GENERAL REVISION AS CLOUDED	
4	22/4/96	SHELTER PILES AMENDED	D.L.
3	17/4/96	PILE COORD. & CUT OFF LEVEL AMMENDED	D.L.
2	25/3/96	FOR CONSTRUCTION ISSUE	D.L.
0	1/11/95	TENDER ISSUE	D.L.

1:200 0 4 8 12 16m (FULL SIZE)

QUALITY RECORD	NAME	SIGNATURE	DATE
DRAFTER	L.R.M.		
DESIGNER CHECK	P.H./D.L.		
PROJECT DIRECTOR APPROVAL			

MAUNSELL PROPRIETARY LIMITED
Planners & Environmental Scientists
A.C.N. 004 848 024

CLIENT: Brisbane City, Brisbane Transport

PROJECT TITLE: BRISBANE FERRY TERMINALS
DRG. TITLE: NORTH QUAY GENERAL ARRANGEMENT PILING SCHEDULE & SETOUT
DATE OF ISSUE: JULY 96
SIZE: A1
CAD REFERENCE: J:\2379S\DESIGN\B30-931.DWG
DRG. No.: B30-931
REV.: 7
DRG. STATUS: FOR CONSTRUCTION

19

BCC.133.0033

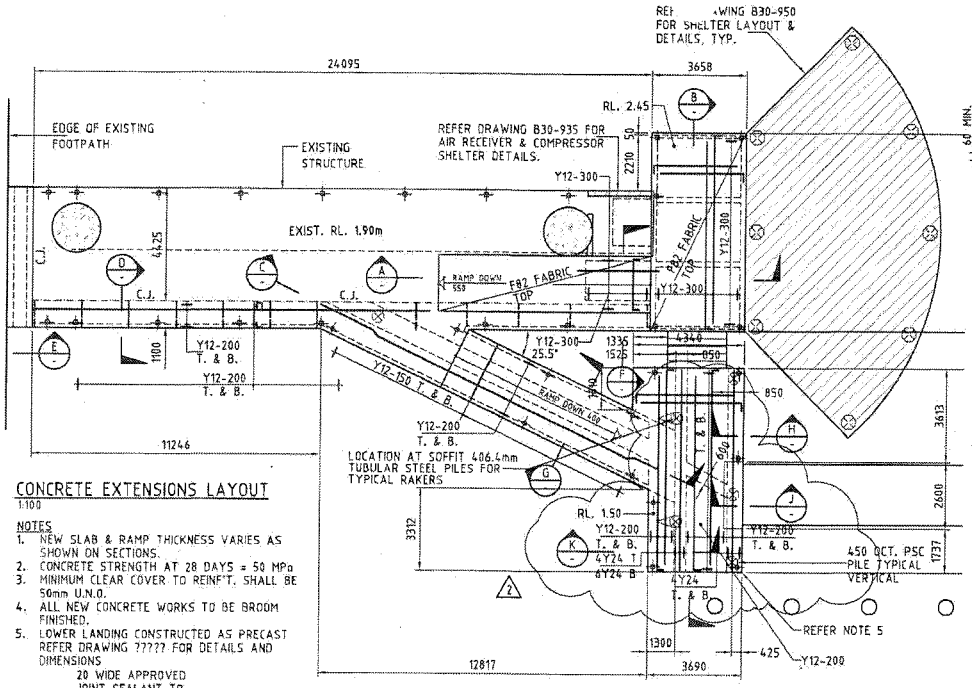

CONCRETE EXTENSIONS LAYOUT

1:100

NOTES

1. NEW SLAB & RAMP THICKNESS VARIES AS SHOWN ON SECTIONS.
2. CONCRETE STRENGTH AT 28 DAYS = 50 MPa
3. MINIMUM CLEAR COVER TO REINF'T. SHALL BE 50mm U.N.O.
4. ALL NEW CONCRETE WORKS TO BE BROOM FINISHED.
5. LOWER LANDING CONSTRUCTED AS PRECAST REFER DRAWING ????? FOR DETAILS AND DIMENSIONS

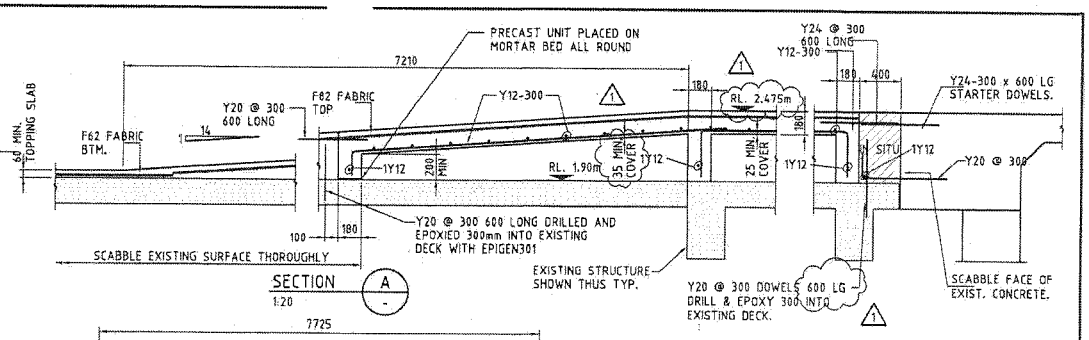

SECTION A
1:20

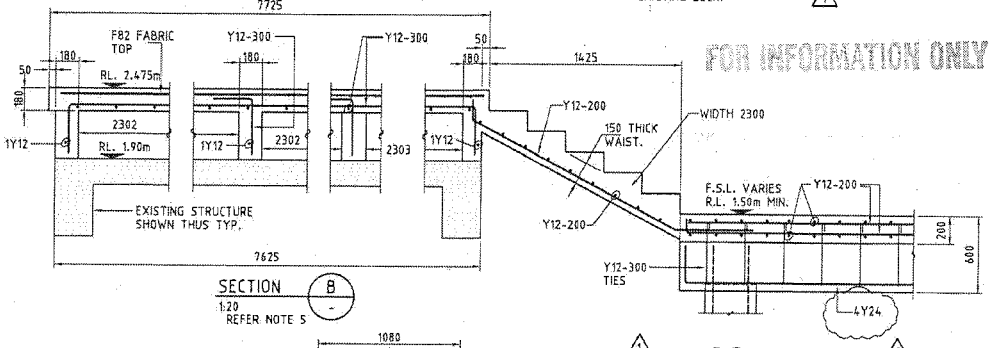

SECTION B
1:20
REFER NOTE 5

FOR INFORMATION ONLY

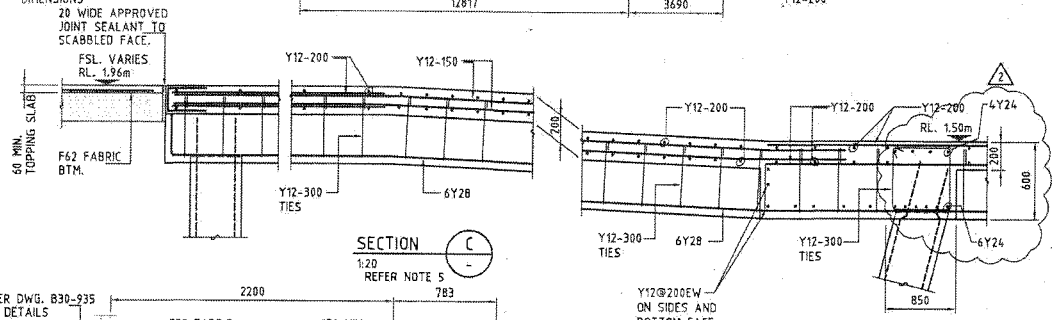

SECTION C
1:20
REFER NOTE 5

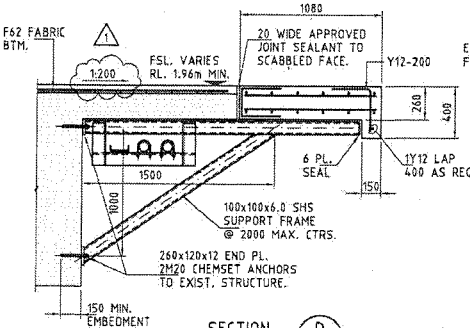

SECTION D
1:20

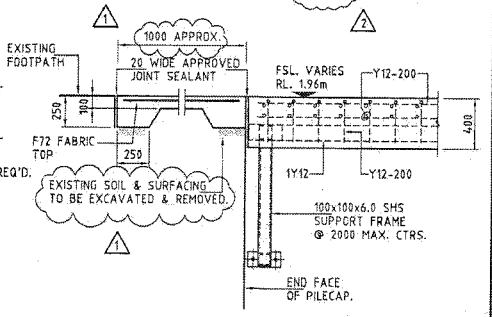

SECTION E
1:20

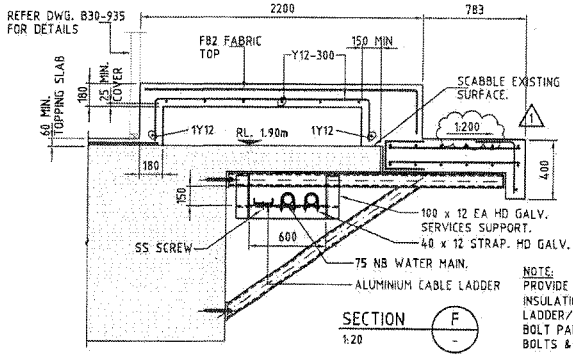

SECTION F
1:20

NOTE:
PROVIDE NEOPRENE PADS OR EQUIV. INSULATION TO TO ALL PIPE/CABLE LADDER/BRACKET/STRAO INTERFACES. BOLT PADS TO BRACKETS. USE NUTS, BOLTS & WASHERS HD GALV.

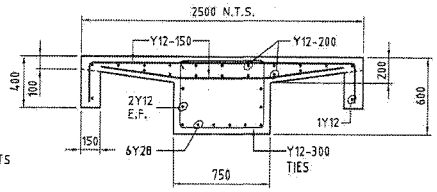

SECTION G
1:20

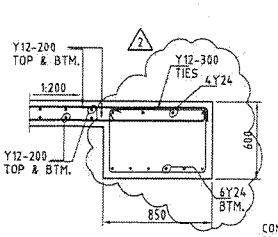

SECTION H
1:20
REFER NOTE 5

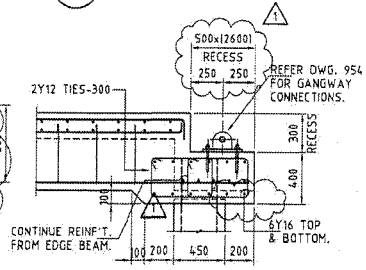

SECTION J
1:20
REFER NOTE 5

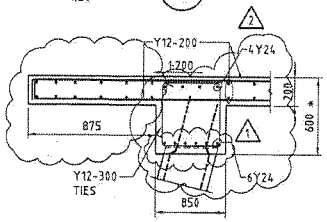

* DEPTH OF 850 WIDE BEAM TAPERS FROM 600 TO 200 BEYOND RAKING PILES

SECTION K
1:20
REFER NOTE 5

REV.	DATE	DESCRIPTION	P.D.
4	7/96	DIMENSIONS AMMENDED	
3	19/6/96	GENERAL AMENDMENTS	
2	25/3/96	ISSUED FOR CONSTRUCTION	D.L.
		PLAN DIMENSIONS ADDED	
1	15/12/95	GENERAL REVISION AS CLOUDED	D.L.
0	1/11/95	TENDER ISSUE	D.L.

1:100 2000 0 2000 4000 6000 8000mm
1:20 400 0 400 800 1200 1600mm

QUALITY RECORD	NAME	SIGNATURE	DATE
DRAFTER	P.J.T.		
DESIGNER CHECK	I.P.C.R.		
PROJECT DIRECTOR APPROVAL			

MAUNSELL PROPRIETARY LIMITED
Planners & Environmental Scientists.
A.C.N. 004 848 824

CLIENT: Brisbane Transport, Brisbane City

PROJECT TITLE: BRISBANE FERRY TERMINALS
DRG. TITLE: NORTH QUAY TERMINAL CONCRETE LAYOUT AND DETAILS
DATE OF ISSUE: JULY 96
SIZE: A1
CAD REFERENCE: J:23795/DESIGN/B30-932.DWG
DRG. No.: B30-932
REV.: 4
DRG. STATUS: FOR CONSTRUCTION

BCC.133.0034

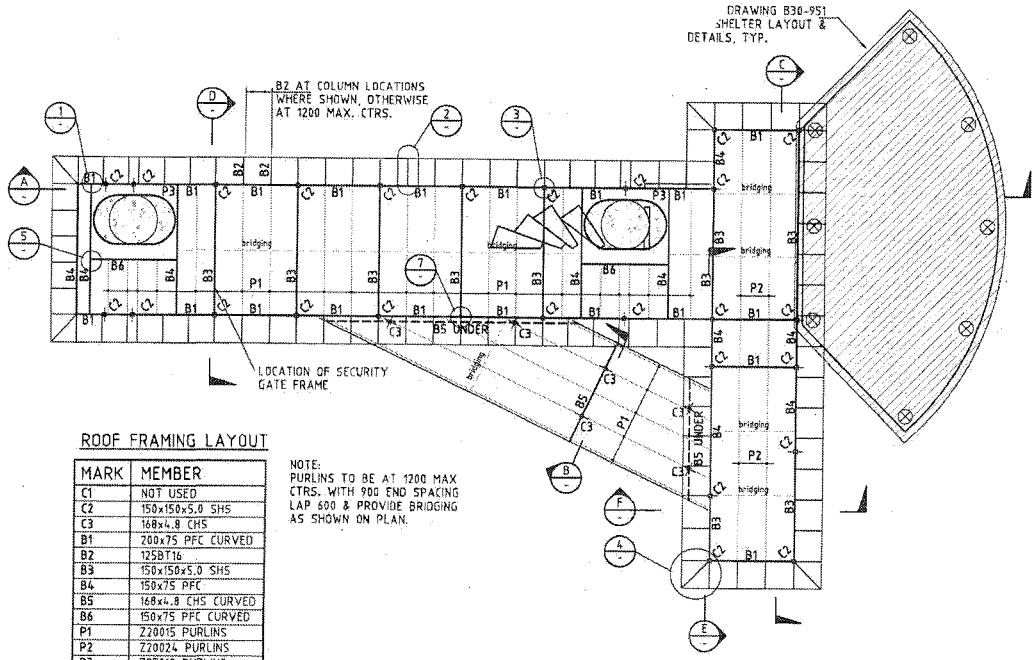

ROOF FRAMING LAYOUT

MARK	MEMBER
C1	NOT USED
C2	150x150x5.0 SHS
C3	168x4.8 CHS
B1	200x75 PFC CURVED
B2	12SBT16
B3	150x150x5.0 SHS
B4	150x75 PFC
B5	168x4.8 CHS CURVED
B6	150x75 PFC CURVED
P1	Z20015 PURLINS
P2	Z20024 PURLINS
P3	Z25019 PURLINS

NOTE:
PURLINS TO BE AT 1200 MAX CTRS. WITH 900 END SPACING LAP 600 & PROVIDE BRIDGING AS SHOWN ON PLAN.

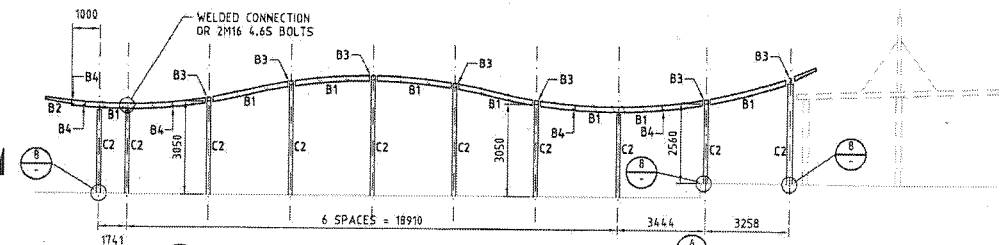

SECTION A 1:100

SECTION B 1:100

SECTION C 1:100

SECTION D 1:100

SECTION E 1:100

SECTION F 1:100

NOTE:
DIFFERENT DISTANCE FROM LHS SLAB EDGE

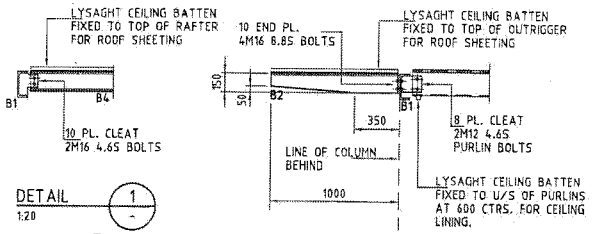

DETAIL 1 1:20

DETAIL 5 SIM. 1:20

DETAIL 2 1:20

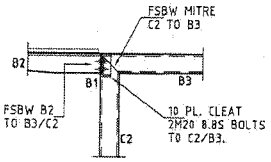

DETAIL 3 1:20

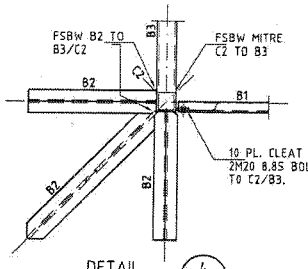

DETAIL 4 1:20

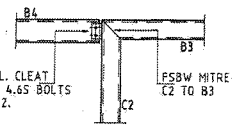

DETAIL 6 1:20

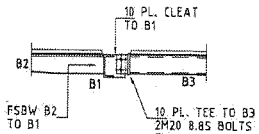

DETAIL 7 1:20

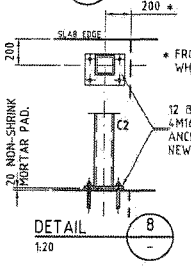

DETAIL 8 1:20

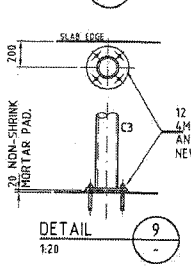

DETAIL 9 1:20

FOR INFORMATION ONLY

NOTE:
ALL DIMENSIONS TO BE CHECKED ON SITE

REV.	DATE	DESCRIPTION	P.D.
3	7/96	DIMENSIONS AMMENDED	
2	7/96	DIMENSIONS REVISED	
1	25/3/96	ISSUED FOR CONSTRUCTION	D.L.
0	1/11/95	TENDER ISSUE	D.L.

1:100 2000 0 2000 4000 6000 8000mm

1:20 400 0 400 800 1200 1600mm

QUALITY RECORD	NAME	SIGNATURE	DATE
DRAFTER	D.M.		
DESIGNER CHECK	L.T.		
PROJECT DIRECTOR APPROVAL			

MAUNSELL PROPRIETARY LIMITED
Planners & Environmental Scientists
A.C.N. 004 848 864

CLIENT: Brisbane City, Brisbane Transport

PROJECT TITLE: BRISBANE FERRY TERMINAL
DWG. TITLE: NORTH QUAY TERMINAL
STEELWORK LAYOUT AND DETAILS

DATE OF ISSUE: JULY 96
SIZE: A1
CAD REFERENCE: J/23795/DESIGN/B30-933.DWG
DWG. No.: B30-933
REV.: 3
DRG. STATUS: FOR CONSTRUCTION

BCC.133.0035

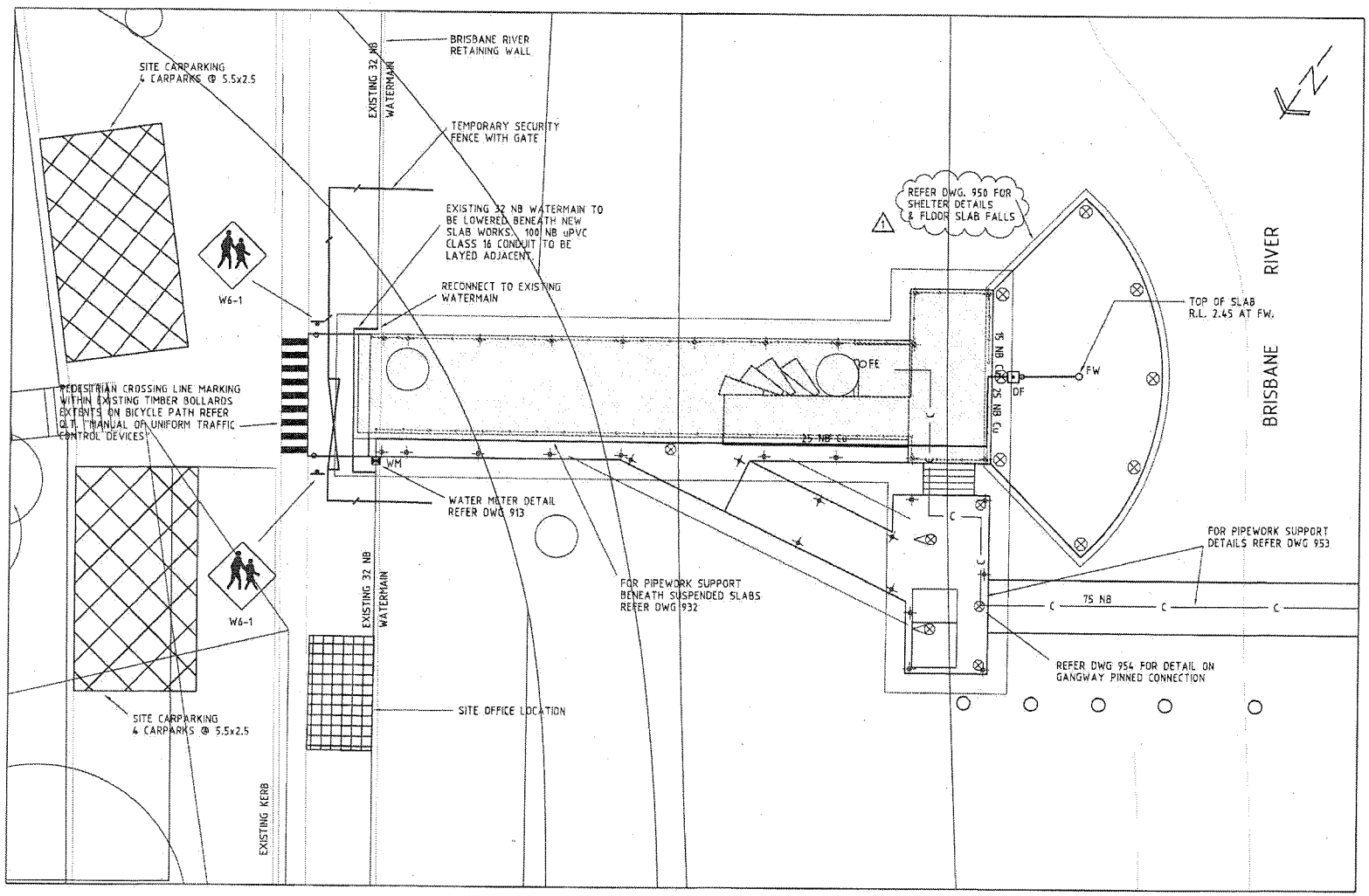

NORTH QUAY SITE WORKS AND SERVICES

SCALE 1:100

LEGEND

- DF — DRINKING FOUNTAIN DRAIN
- HC — HOSE COCK (15NB)
- FE — FIRE EXTINGUISHER
- DF — DRINKING FOUNTAIN
- WM — WATER METER
- WATER MAIN
- FW — FLOOR WASTE
- C — COMPRESSED AIR

NOTES:

1. REFER ARCHITECTURAL PLANS FOR LOCATION OF HAND RAILING AND FURNITURE WITHIN SUSPENDED SLAB EXTENTS.
2. EXISTING SERVICES BENEATH PILECAP TO BE REMOVED AND SURFACE REPAIRED IN ACCORDANCE WITH SPECIFICATION.
3. FOR DETAILS ON REMOVAL/DEMOLISHING OF EXISTING FURNITURE INCLUDING EXISTING PONTOON AND GANGWAY REFER ARCHITECTURAL DWGS.
4. EXISTING WATER MAIN NOT TO BE DISCONNECTED WITHOUT CONTACTING THE SITE OWNERS.

2

FOR INFORMATION ONLY

REV.	DATE	DESCRIPTION	P.D.
2	25/3/96	ISSUED FOR CONSTRUCTION	D.L.
1	15/12/95	GENERAL REVISION AS CLOUDED	D.L.
0	1/11/95	TENDER ISSUE	D.L.

1:100 0 2 4 6 8m (FULL SIZE)

QUALITY RECORD	NAME	SIGNATURE	DATE
DRAFTER	L.R.M.		
DESIGNER CHECK	P.H./D.L.		
PROJECT DIRECTOR APPROVAL			

MAUNSELL PROPRIETARY LIMITED
Planners & Environmental Scientists
A.C.N. 004 848 824

CLIENT: Brisbane City — Brisbane Transport

PROJECT TITLE: BRISBANE FERRY TERMINALS
DRG. TITLE: NORTH QUAY SITE WORKS AND SERVICES
DATE OF ISSUE: 25/3/96
SIZE: A1
CAD REFERENCE: J\23795\DESIGN\B30-934.DWG
DRG. No.: B30-934
REV.: 2
DRG. STATUS: FOR CONSTRUCTION

BCC.133.0036

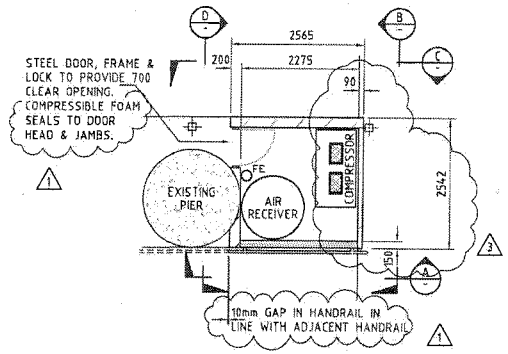

SHELTER FLOOR LAYOUT

NOTE: 200 SERIES BLOCKS FULLY CORE FILLED TO BE USED TYPICAL.

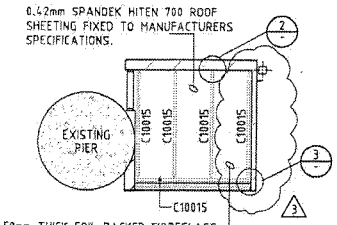

SHELTER ROOF FRAMING LAYOUT
1:100

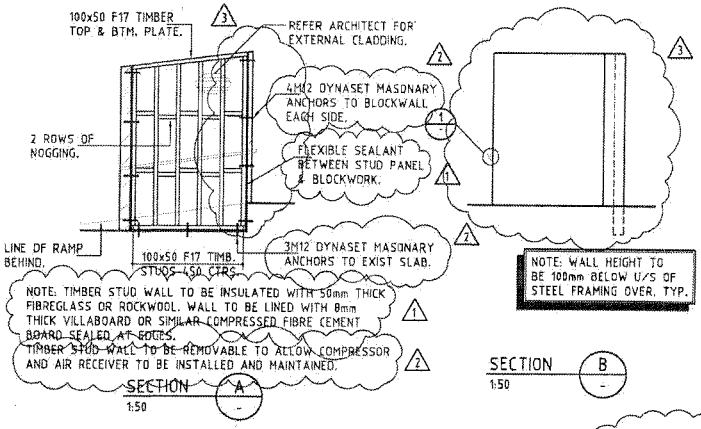

SECTION A
1:50

SECTION B
1:50

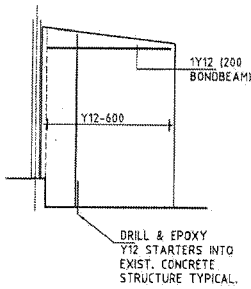

SECTION C
1:50

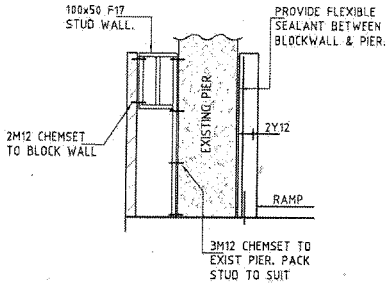

SECTION D
1:50

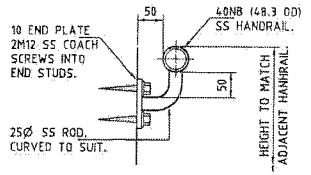

DETAIL 1
1:5

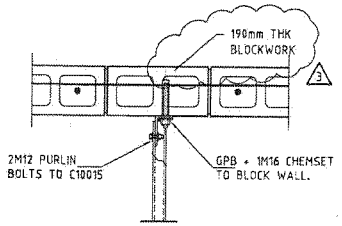

DETAIL 2
1:10

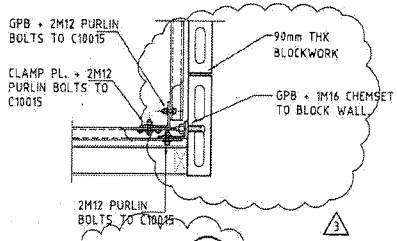

DETAIL 3
1:10

FOR INFORMATION ONLY

REV.	DATE	DESCRIPTION	P.D.
3	11/4/96	190 THK BLOCK WALL CHANGED TO 90 THK	D.L.
2	25/3/96	ISSUED FOR CONSTRUCTION	D.L.
1	15/12/95	GENERAL REVISION AS CLOUDED	D.L.
0	1/11/95	TENDER ISSUE	D.L.

1:50 1000 0 1000 2000 3000 4000mm
1:10 200 0 200 400 600 800mm
1:5 100 0 100 200 300 400mm

QUALITY RECORD	NAME	SIGNATURE	DATE
DRAFTER	D.M.		
DESIGNER CHECK	I.R.		
PROJECT DIRECTOR APPROVAL			

MAUNSELL PROPRIETARY LIMITED
Planners & Environmental Scientists.
A.C.N. 004 848 824

CLIENT: Brisbane City — Brisbane Transport

PROJECT TITLE: BRISBANE FERRY TERMINALS
DRG. TITLE: NORTH QUAY COMPRESSOR SHELTER DETAILS
DATE OF ISSUE: 11/4/96
SIZE: A1
LAST REFERENCE: 23795\DESIGN\B30-935.DWG
DRG. No.: B30-935
REV.: 3
DRG STATUS: FOR CONSTRUCTION

23

BCC.133.0037

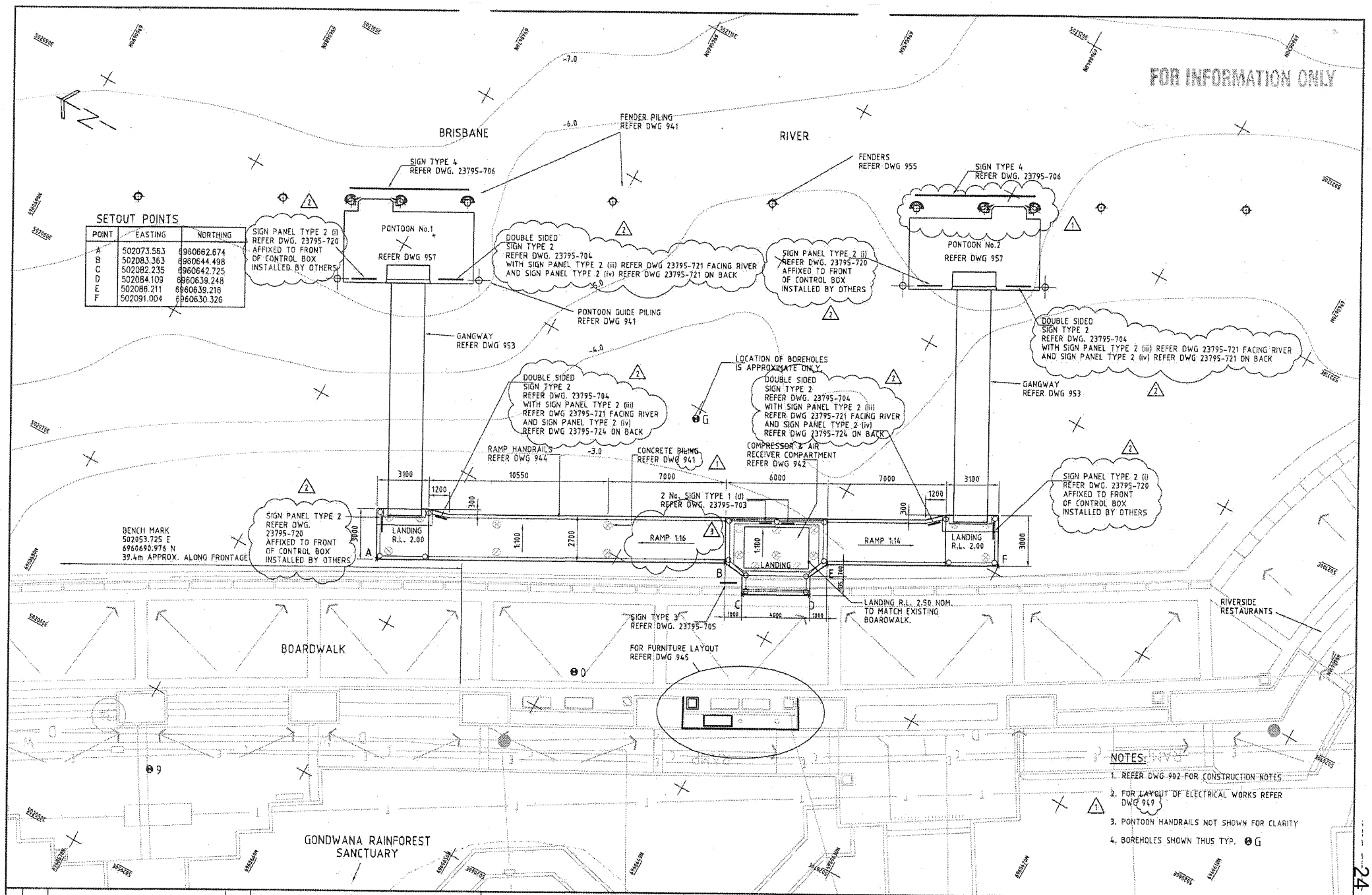

REV.	DATE	DESCRIPTION	
5	8/96	SETOUT CO-ORDS AMENDED	
4	7/96	DIMENSIONS ADDED	
3	3/5/96	GENERAL REVISION CLOUDED	D.L.
2	25/3/96	ISSUED FOR CONSTRUCTION	D.L.
1	15/12/95	GENERAL REVISION AS CLOUDED	D.L.
0	1/11/95	TENDER ISSUE	D.L.

1:100 0 2 4 6 8m (FULL SIZE)

QUALITY RECORD	NAME	SIGNATURE	DATE
DRAFTER	L.R.M.		
DESIGNER CHECK	P.H./D.L.		
PROJECT DIRECTOR APPROVAL			

MAUNSELL PROPRIETARY LIMITED
Planners & Environmental Scientists
A.C.N. 004 848 864

CLIENT: Brisbane City, Brisbane Transport

PROJECT TITLE: BRISBANE FERRY TERMINALS
DRG. TITLE: SOUTH BANK GENERAL ARRANGEMENT

DATE OF ISSUE: AUGUST 96
SIZE: A1
CAD REFERENCE: J:\23795\DESIGN\B30-940.DWG
DRG. No.: B30-940
REV.: 5
DRG. STATUS: FOR CONSTRUCTION

24

BCC.139.0038

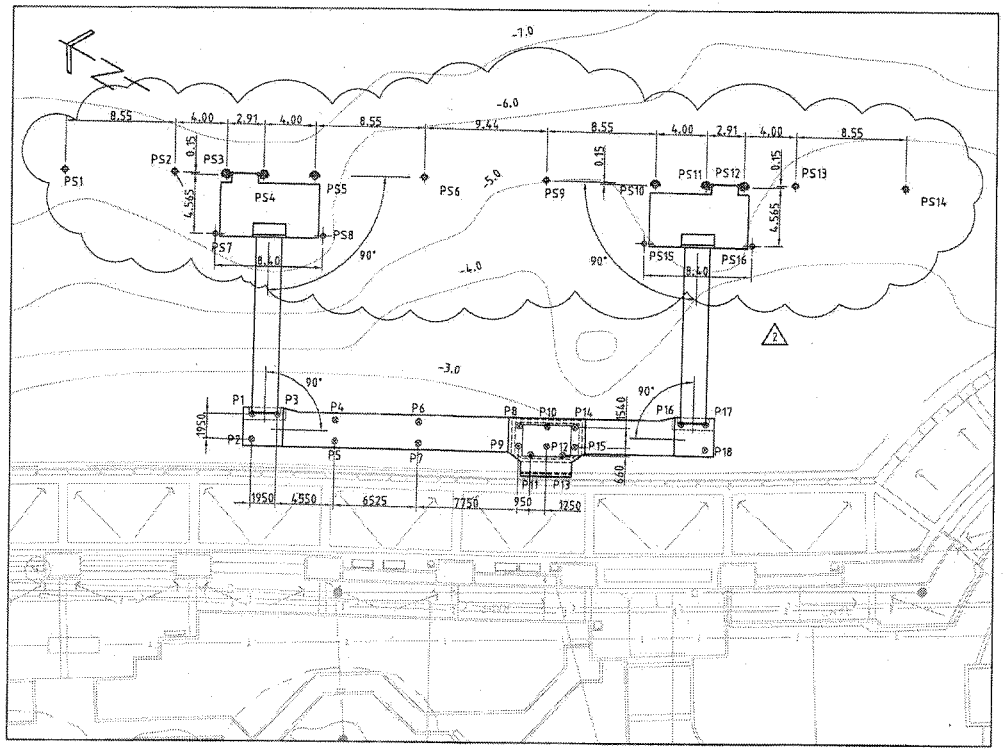

SOUTH BANK TERMINAL - GENERAL PILING ARRANGEMENT

450mm PRESTRESSED CONCRETE PILING SCHEDULE

- REFER MAIN ROADS STD. DRAWING No. S1058 FOR OCTAGONAL CONCRETE PILE DETAILS

PILE SCHEDULE ALL LEVELS GIVEN IN METRES TO A.H.D.					CO-ORDINATES		ULTIMATE PILE CAPACITY (REFER NOTE 3)
MARK.	PILE TYPE	CUT-OFF LEVEL	GROUND OR BED LEVEL	TOE LEVEL	EASTING	NORTHING	kN
P1.	VERT	1.35	-3.0	-14.0 *	502076.062	6960663.255	450
P2.	VERT	1.75	-3.0	-14.0 *	502074.346	6960662.329	450
P3.	VERT	1.35	-3.0	-14.0 *	502076.987	6960661.538	450
P4.	VERT	1.75	-3.0	-14.0 *	502078.883	6960657.391	450
P5.	VERT	1.75	-3.0	-14.0 *	502077.430	6960656.608	450
P6.	VERT	1.82	-3.0	-14.0 *	502081.980	6960651.647	450
P7.	VERT	1.82	-3.0	-14.0 *	502080.527	6960650.864	450
P8.	VERT	0.45	-3.0	-14.0 *	502085.547	6960644.767	450
P9.	VERT	0.45	-3.0	-14.0 *	502084.192	6960644.036	450
P10.	VERT	0.45	-3.0	-14.0 *	502086.591	6960642.830	450
P11.	VERT	0.45	-3.0	-14.0 *	502084.062	6960642.886	450
P12.	VERT	0.45	-3.0	-14.0 *	502085.236	6960642.099	450
P13.	VERT	0.45	-3.0	-14.0 *	502085.248	6960640.686	450
P14.	VERT	0.45	-3.0	-14.0 *	502087.635	6960640.894	450
P15.	VERT	0.45	-3.0	-14.0 *	502086.280	6960640.163	450
P16.	VERT	1.35	-3.5	-14.0 *	502091.937	6960633.812	450
P17.	VERT	1.35	-3.5	-14.0 *	502092.862	6960632.095	450
P18.	VERT	1.75	-3.5	-14.0 *	502091.145	6960631.170	450

STEEL PILING SCHEDULE

- REFER DRAWING B30-955 FOR STEEL PILE DETAILS.

PILE SCHEDULE ALL LEVELS GIVEN IN METRES TO A.H.D.					CO-ORDINATES		LENGTH OF PLATING	DISTANCE FROM TOE
MARK.	PILE TYPE	CUT-OFF LEVEL	GROUND OR BED LEVEL	TOE LEVEL	EASTING	NORTHING	Lp	Lt
PS1.	E2	3.60	-6.0	-18.0	502085.425	6960685.378		
PS2.	E1	3.60	-6.5	-18.0	502089.482	6960677.852		
PS3.	C2	5.55	-6.5	-16.0	502091.249	6960674.260		
PS4.	C1	5.55	-6.5	-16.0	502092.630	6960671.698		
PS5.	B	5.55	-6.5	-16.0	502094.528	6960668.177		
PS6.	E1	3.60	-5.5	-18.0	502098.717	6960660.723		
PS7.	A1	5.55	-6.0	-16.0	502086.877	6960672.749	7.5	4
PS8.	A1	5.55	-6.0	-16.0	502090.863	6960665.355	7.5	4
PS9.	E1	3.60	-5.0	-18.0	502103.197	6960652.414		
PS10.	B	5.55	-5.0	-16.0	502107.123	6960644.816		
PS11.	C2	5.55	-5.5	-16.0	502109.021	6960641.296		
PS12.	C1	5.55	-5.0	-16.0	502110.402	6960638.734		
PS13.	E1	3.60	-5.0	-18.0	502112.432	6960635.284		
PS14.	E3	3.60	-4.5	-18.0	502116.490	6960627.759		
PS15.	A1	5.55	-5.0	-16.0	502102.751	6960643.306	7.5	4
PS16.	A1	5.55	-5.0	-16.0	502106.737	6960635.912	7.5	4

NOTES:

1. ~~TOE LEVELS CORRESPOND TO MINIMUM PILE PENETRATION~~
2. ~~FOR 458mm PSC PILE HEAD PREPARATION REFER DWG. 952.~~
3. "ULTIMATE PILE CAPACITY" IN THE TABLES HAS BEEN SPECIFIED IN ACCORDANCE WITH AS2159-1978 AND CORRESPONDS TO THE MINIMUM TEST VALUE TO BE ACHIEVED BY HILEY CALCULATION ON ANY PILE WHEN ALL PILES PRE TESTED USING HILEY.
4. ALL CONCRETE PILES MUST EXTEND AT LEAST TO THE "HIGHEST TOE LEVEL" SHOWN ON THE TABLE. IN ADDITION THEY MUST BE DRIVEN TO A PENETRATION TO ACHIEVE THE ULTIMATE AXIAL GEOTECHNICAL STRENGTH.
5. THE STEEL PILES ARE TO BE INSTALLED TO THE "REQUIRED TOE LEVEL" AS SHOWN ON THE DRAWINGS

FOR INFORMATION ONLY

REV.	DATE	DESCRIPTION	P.D.
5	8/96	PILE CO-ORDS AMENDED	
4	7/96	PILE CO-ORDS. AMENDED	
3	17/4/96	PILE CUT OFF LEVELS AMENDED	D.L.
2	25/3/96	ISSUED FOR CONSTRUCTION	D.L.
1	15/12/95	GENERAL REVISION AS CLOUDED	D.L.
0	1/11/95	TENDER ISSUE	D.L.

1:200 (FULL SIZE)

QUALITY RECORD	NAME	SIGNATURE	DATE
DRAFTER	L.M.		
DESIGNER CHECK	P.H./D.L.		
PROJECT DIRECTOR APPROVAL			

MAUNSELL PROPRIETARY LIMITED
Planners & Environmental Scientists
A.C.N. 006 840 624

CLIENT: Brisbane City — Brisbane Transport

PROJECT TITLE: BRISBANE FERRY TERMINALS
DRG. TITLE: SOUTH BANK GENERAL ARRANGEMENT PILING SCHEDULE & SETOUT

DATE OF ISSUE: AUGUST 96 | SIZE: A1
CAD REFERENCE: J:\23795\DESIGN\B30-941.DWG
DRG. No.: B30-941 | REV.: 5
DRG STATUS: FOR CONSTRUCTION

BCC.1000039

NOTE:
NEW CONCRETE WALKWAY TO HAVE AN EXPOSED AGGREGATE FINISH TO MATCH THE EXISTING ADJACENT BOARD WALK. MIX SUPPLIED BY PIONEER.

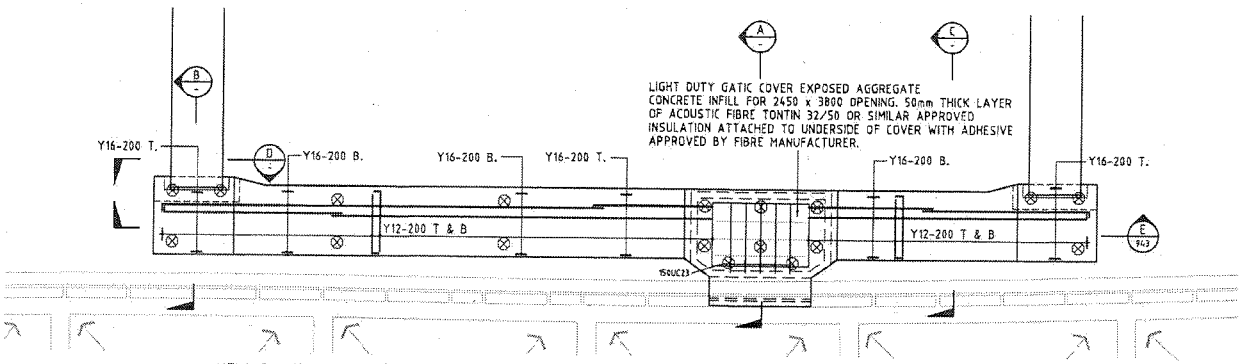

NEW CONCRETE WALKWAY LAYOUT
1:100

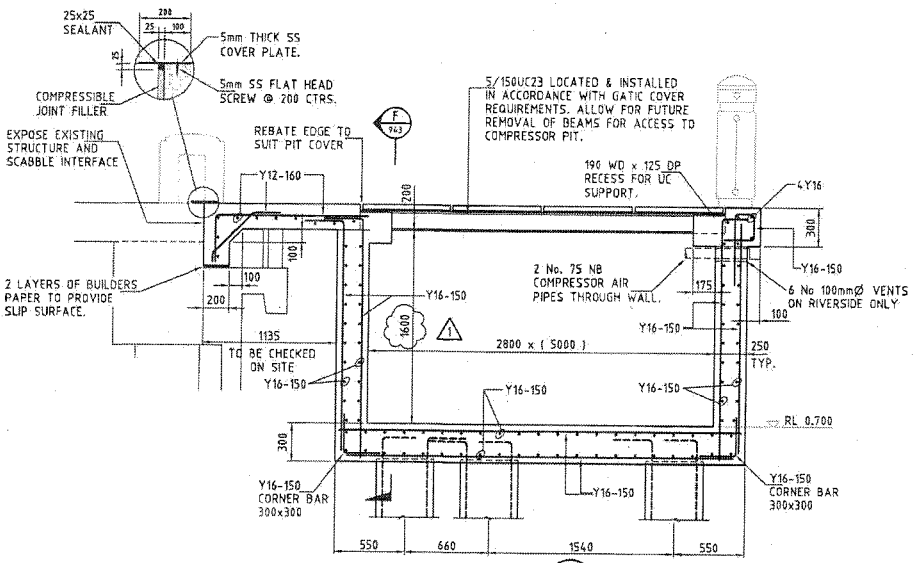

SECTION A
1:20

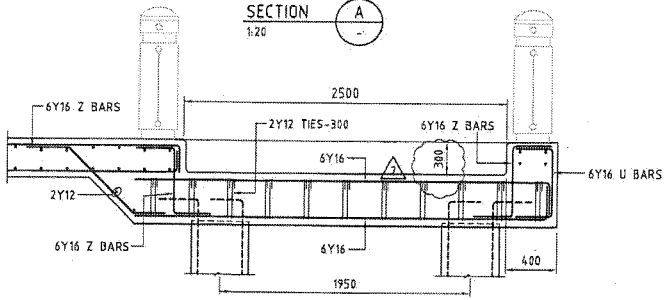

SECTION D
1:20

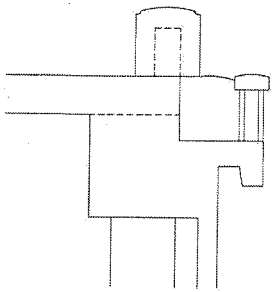

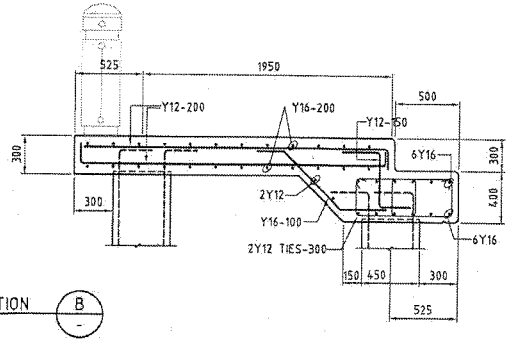

SECTION B
1:20

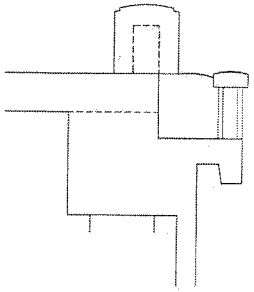

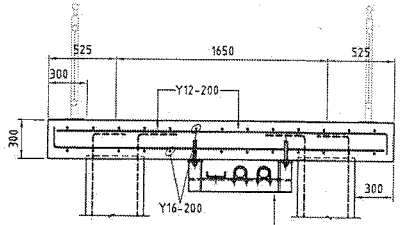

2 No. 75 NB COMPRESSOR AIR PIPES, ELECTRICAL & WATER SERVICES TO U/S OF WALKWAY. FOR SERVICES SUPPORT FRAME REFER DWG. No. 950

SECTION C
1:20

FOR INFORMATION ONLY

REV.	DATE	DESCRIPTION	P.D.
3	6/96	MINOR AMENDMENTS	D.L.
2	25/3/96	ISSUED FOR CONSTRUCTION	D.L.
1	15/12/95	GENERAL REVISION AS CLOUDED	D.L.
0	1/11/95	TENDER ISSUE	D.L.

1:100 2000 0 2000 4000 6000 8000mm
1:20 400 0 400 800 1200 1600mm

QUALITY RECORD	NAME	SIGNATURE	DATE
DRAFTER	P.J.T.		
DESIGNER CHECK	I.P.C.R.		
PROJECT DIRECTOR APPROVAL			

MAUNSELL PROPRIETARY LIMITED
Planners & Environmental Scientists
A.C.N. 004 840 824

CLIENT.
Brisbane City
Brisbane Transport

PROJECT TITLE: BRISBANE FERRY TERMINALS
DRG. TITLE: SOUTH BANK CONCRETE LAYOUT AND DETAILS SHEET 1

DATE OF ISSUE: 25/3/96
SIZE: A1
CAD REFERENCE: J:\23795\DESIGN\B30-942.DWG
DRG. No.: B30-942
REV.: 3
DRG. STATUS: FOR CONSTRUCTION

26

BCC.139.0040

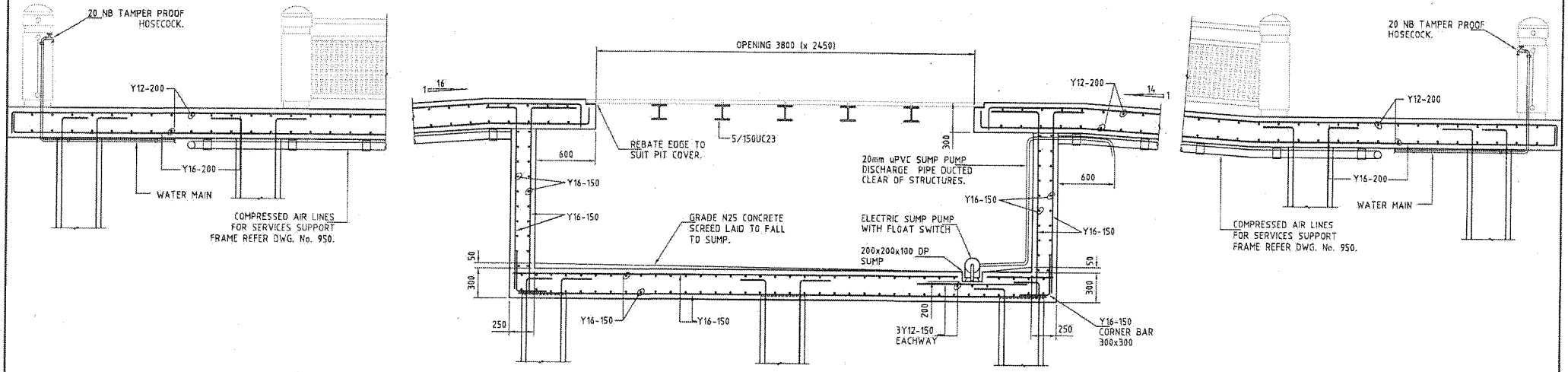

SECTION E
1:20 942

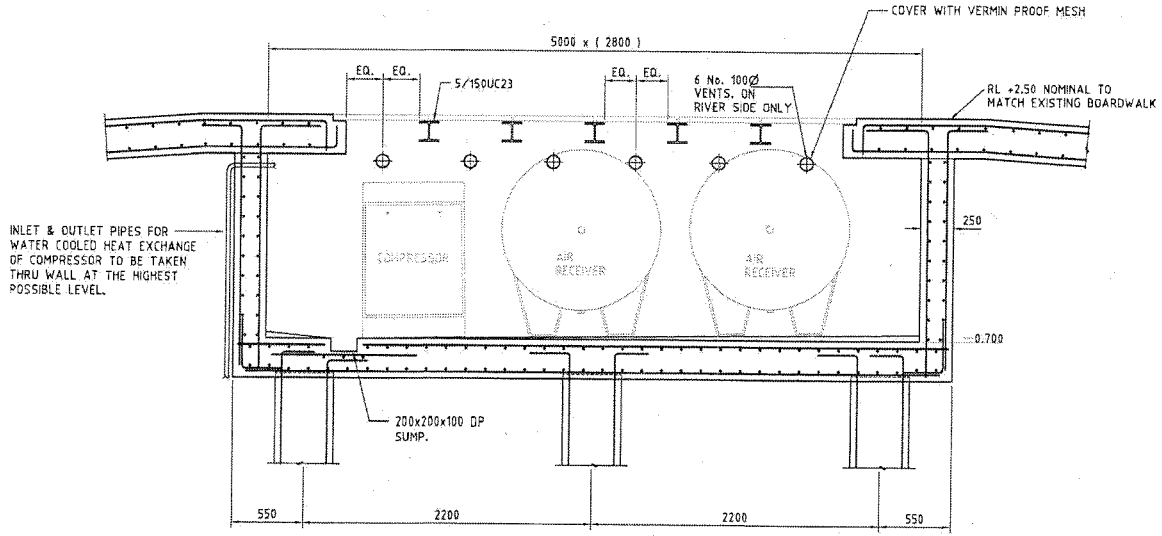

FOR INFORMATION ONLY

NOTE:
NEW CONCRETE WALKWAY TO HAVE AN EXPOSED AGGREGATE FINISH TO MATCH THE EXISTING ADJACENT BOARD WALK. MIX SUPPLIED BY PIONEER.

REV.	DATE	DESCRIPTION	P.D.
5	7/96	DIMENSIONS AMMENDED	
4	6/96	RIVER SIDE VENTS AMMENDED	
3	3/5/96	GENERAL REVISION AS CLOUDED	D.L.
2	25/3/96	ISSUED FOR CONSTRUCTION	D.L.
1	15/12/95	GENERAL REVISION AS CLOUDED	D.L.
0	1/11/95	TENDER ISSUE	D.L.

SCALE 200 0 200 400 600 800 1000mm
1 20 FULL SIZE A1

QUALITY RECORD	NAME	SIGNATURE	DATE
DRAFTER	P.J.T.		
DESIGNER CHECK	I.P.C.R.		
PROJECT DIRECTOR APPROVAL			

MAUNSELL PROPRIETARY LIMITED
Planners & Environmental Scientists.
A.C.N. 004 848 824

CLIENT: Brisbane City — Brisbane Transport

PROJECT TITLE: BRISBANE FERRY TERMINALS
DRG. TITLE: SOUTH BANK CONCRETE DETAILS SHEET 2
DATE OF ISSUE: JULY 96
SIZE: A1
CAD REFERENCE: J:\23795\DESIGN\B30-943.DWG
DRG. No.: B30-943
REV.: 5
DRG. STATUS: FOR CONSTRUCTION

BCC.100.0041

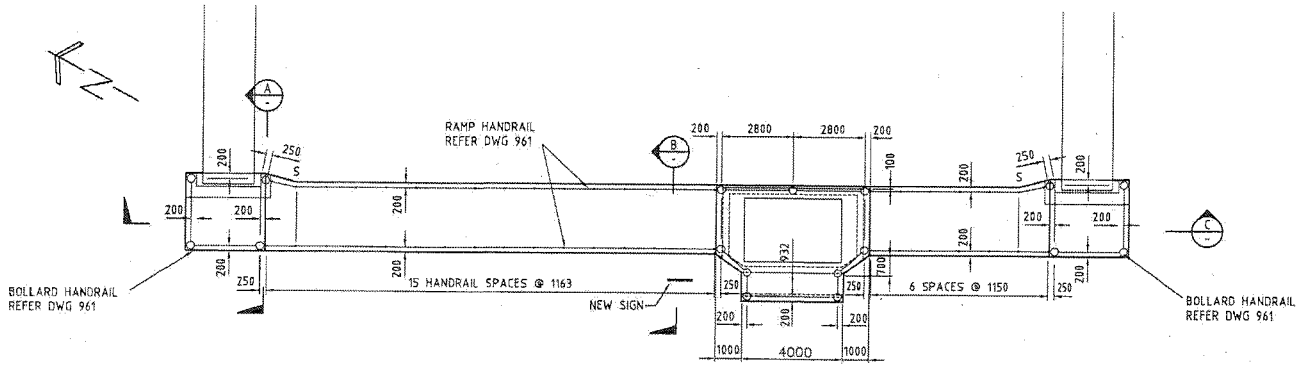

NOTE:
S - LOCATION OF SIGNS TO BE INCORPORATED IN HANDRAIL.
REFER DWG 940

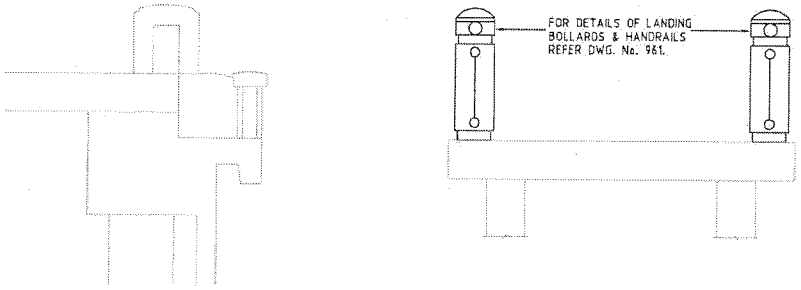

SECTION A
1:20

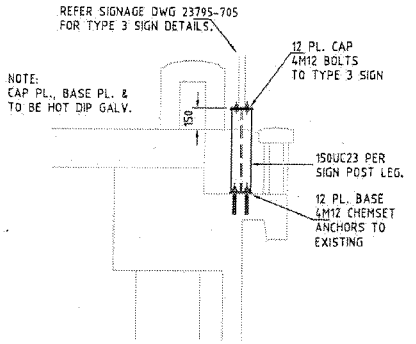

SECTION B
1:20

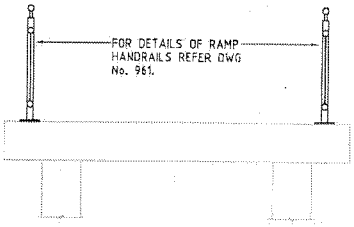

FOR INFORMATION ONLY

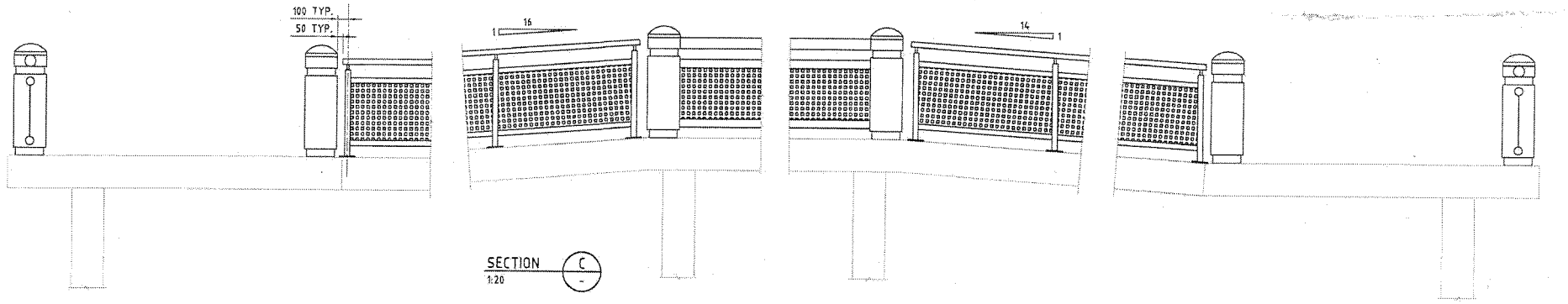

SECTION C
1:20

REV.	DATE	DESCRIPTION	P.D.
4	6/96	DIMENSION ADDED	D.L.
3	3/5/96	GENERAL REVISION AS CLOUDED	D.L.
2	25/3/96	ISSUED FOR CONSTRUCTION	D.L.
1	15/12/95	GENERAL REVISION AS CLOUDED	D.L.
0	1/11/95	TENDER ISSUE	D.L.

SCALE 1 : 20 — 200 0 200 400 600 800 1000mm — FULL SIZE A1

SCALE 1 : 100 — 1000 0 1000 2000 3000 4000 5000mm — FULL SIZE A1

QUALITY RECORD	NAME	SIGNATURE	DATE
DRAFTER	P.J.T.		
DESIGNER CHECK	I.P.C.R.		
PROJECT DIRECTOR APPROVAL			

MAUNSELL PROPRIETARY LIMITED
Planners & Environmental Scientists.
A.C.N. 004 848 824

CLIENT.
Brisbane City
Brisbane Transport

PROJECT TITLE: BRISBANE FERRY TERMINALS
DWG. TITLE: SOUTH BANK
HANDRAIL SETOUT AND DETAILS

DATE OF ISSUE: JUNE 96
SIZE: A1
CAD REFERENCE: J:\23795\DESIGN\B30-944.DWG
DRG. No.: B30-944
REV.: 4
DRG. STATUS: FOR CONSTRUCTION

BCC.139.0042

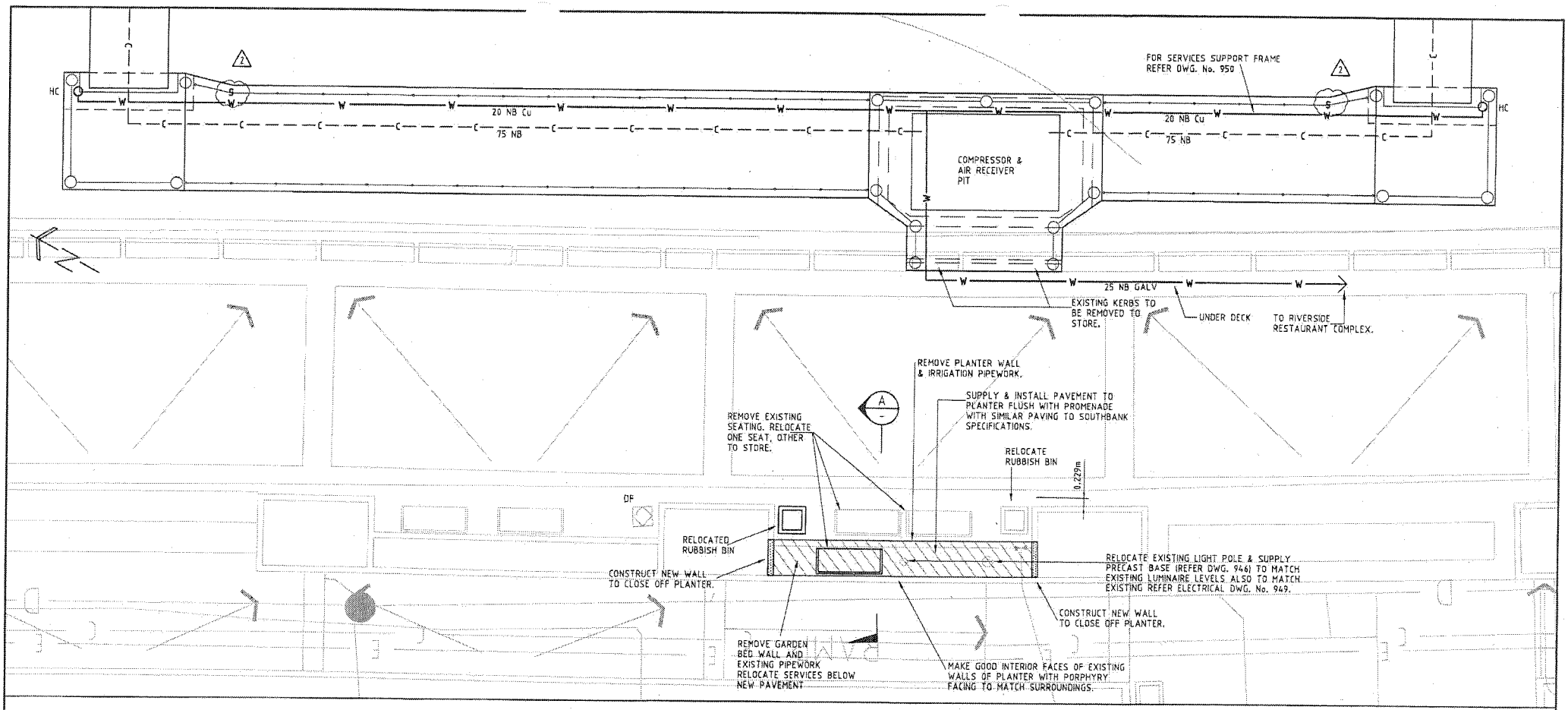

LAYOUT PLAN
1:50

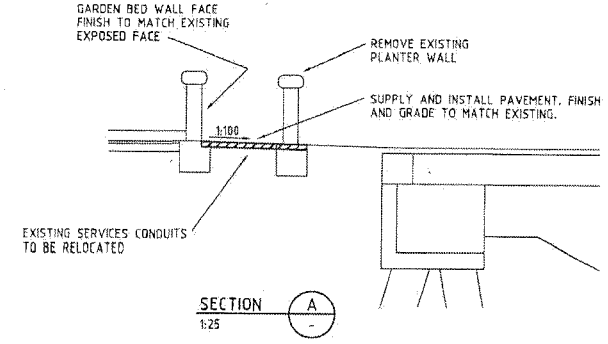

SECTION A
1:25

FOR INFORMATION ONLY

NOTES

1. ALL RECOVERABLE MATERIALS INCLUDING BOLLARDS, ELECTRICAL, & IRRIGATION FITTINGS, SEATING AND THE LIKE TO REMAIN THE PROPERTY OF SOUTH BANK CORPORATION AND STORED AS DIRECTED BY A REPRESENTATIVE OF SOUTH BANK CORPORATION
2. ALL WORK TO BE CARRIED OUT IN ACCORDANCE WITH THE DRAWINGS, RELEVANT STANDARDS, B.C.C. AND SOUTH BANK CORPORATION REQUIREMENTS

LEGEND

- S – LOCATION OF SIGN INCORPORATED IN HANDRAILING
- HC – HOSE COCK (20NB) TAMPER PROOF (AS PER EXISTING SOUTH BANK TYPE)
- DF – DRINKING FOUNTAIN
- W – WATER MAIN
- C – COMPRESSED AIR LINE & CONTROL CABLE
- CONCRETE LANDING BOLLARD (REFER DWG. 961)
- RAMP HANDRAIL (REFER DWG. 961)

REV.	DATE	DESCRIPTION	P.B.
2	25/3/96	ISSUED FOR CONSTRUCTION	D.L.
1	15/12/95	GENERAL REVISION AS CLOUDED	D.L.
0	1/11/95	TENDER ISSUE	D.L.

1:50 0 1 2 3 4m (FULL SIZE)
1:25 0 0.5 1 1.5 2m (FULL SIZE)

QUALITY RECORD	NAME	SIGNATURE	DATE
DRAFTER	L.R.M.		
DESIGNER CHECK	P.H./D.L.		
PROJECT DIRECTOR APPROVAL			

MAUNSELL PROPRIETARY LIMITED
Planners & Environmental Scientists
A.C.N. 004 848 854

CLIENT: Brisbane City / Brisbane Transport

PROJECT TITLE: BRISBANE FERRY TERMINALS
DWG. TITLE: SOUTH BANK SITE WORKS AND SERVICES
DATE OF ISSUE: 25/3/96
SIZE: A1
CAD REFERENCE: J:\23795\DESIGN\B30-945.DWG
DWG. No.: B30-945
REV.: 2
DRG. STATUS: FOR CONSTRUCTION

BCC.133.0043

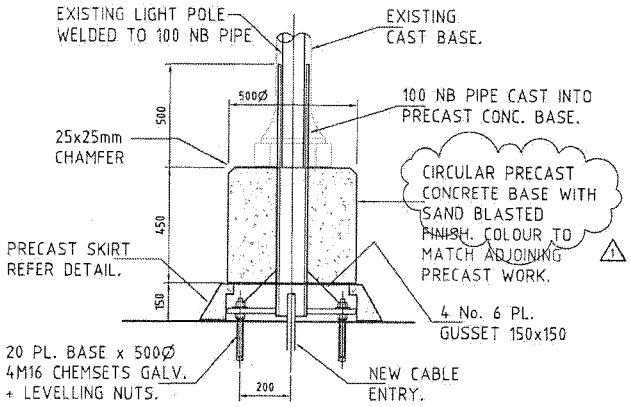

RELOCATED LIGHT POLE BASE DETAIL

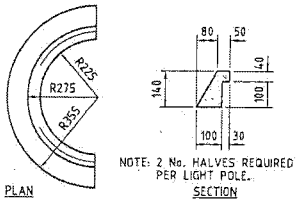

PRECAST CONCRETE SKIRT DETAIL

FOR INFORMATION ONLY

REV.	DATE	DESCRIPTION	P.D.
2	25/3/96	ISSUED FOR CONSTRUCTION	D.L.
1	15/12/95	GENERAL REVISION AS CLOUDED	D.L.
0	1/11/95	TENDER ISSUE	D.L.

QUALITY RECORD	NAME	SIGNATURE	DATE
DRAFTER	D.M.		
DESIGNER CHECK	I.R.		
PROJECT DIRECTOR APPROVAL			

MAUNSELL PROPRIETARY LIMITED
Planners & Environmental Solicitors.
A.C.N. 004 846 826

CLIENT: Brisbane City — Brisbane Transport

PROJECT TITLE: BRISBANE FERRY TERMINALS
DRG. TITLE: SOUTH BANK TERMINAL SITE WORKS DETAILS

DATE OF ISSUE: 25/3/96 | SIZE: A1
CAD REFERENCE: 23795\DESIGN\B30-946.DWG
DRG. No.: B30-946 | REV.: 2
DRG. STATUS: FOR CONSTRUCTION

30

BCC.1997.0044

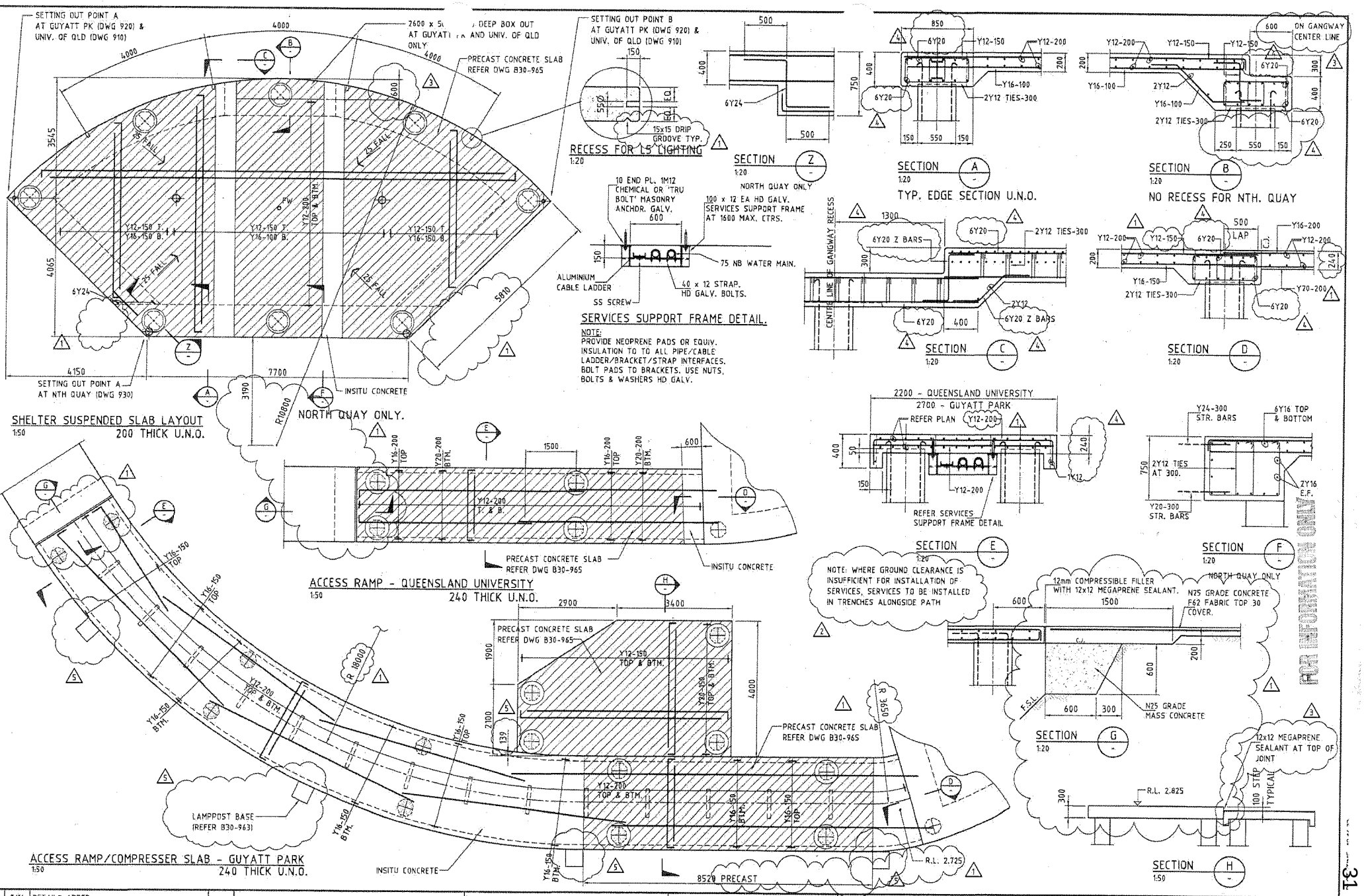

REV.	DATE	DESCRIPTION	P.D.
6	7/96	DETAILS ADDED	D.L.
5	2/5/96	LAMPPOST BASE ADDED, DIMENSION AMENDED	D.L.
4	12/4/96	INSITU CONCRETE CHANGED TO PRECASTE	D.L.
3	26/3/96	DIMENSION CHANGES	D.L.
2	25/3/96	ISSUED FOR CONSTRUCTION	D.L.
1	15/12/95	GENERAL REVISION AS CLOUDED	D.L.
0	1/11/95	TENDER ISSUE	D.L.

1:50 1000 0 1000 2000 3000 4000mm
1:20 400 0 400 800 1200 1600mm

QUALITY RECORD	NAME	SIGNATURE	DATE
DRAFTER	D.M.		
DESIGNER CHECK	L.T.		
PROJECT DIRECTOR APPROVAL			

MAUNSELL PROPRIETARY LIMITED
Planners & Environmental Scientists
A.C.N. 004 848 824

CLIENT: Brisbane City, Brisbane Transport

PROJECT TITLE: BRISBANE FERRY TERMINALS
DRG. TITLE: SHELTERS AND ACCESS RAMPS LAYOUT AND DETAILS
DATE OF ISSUE: JULY 96
SIZE: A1
CAD REFERENCE: J:\23795\DESIGN\B30-950.DWG
DRG. No.: B30-950
REV.: 6
DRG. STATUS: FOR CONSTRUCTION

31

BCC.133.0045

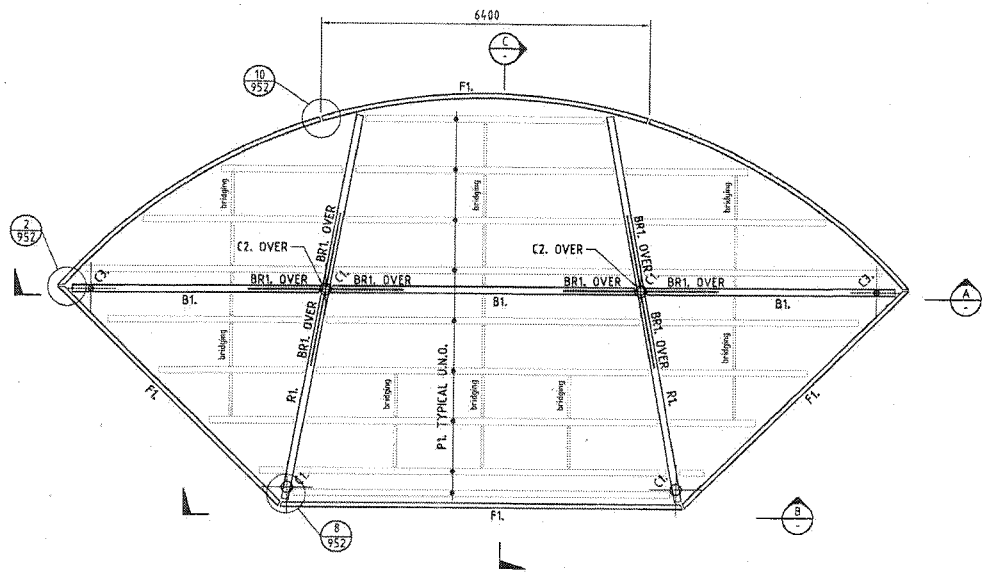

SHELTER ROOF FRAMING PLAN
1:50

NOTE: FOR LOUVRE SUPPORT DETAILS
REFER DWG. No. 981.

MEMBER SCHEDULE			
MARK.	DESCRIPTION	SIZE	GRADE
B1.	ROOF BEAM	200 UB 25.4	300+
BR1.	BRACE	Ø 48 x 5.4 C.H.S.	250
C1.	COLUMN	Ø 219 x 6.4 C.H.S.	350
C2.	COLUMN	Ø 139.7 X 5.4 C.H.S.	350
C3.	COLUMN	Ø 101.6 x 5.0 C.H.S.	250
H1.	NOT USED	-	-
T1.	NOT USED	-	-
M1.	NOT USED	-	-
S1.	SPIRE	Ø 30 ROD	-
F1.	FASCIA CHANNEL	300 x 90 P.F.C.	300+
P1.	PURLIN	Z 25019	-
R1.	RAFTER	200 UB 25.4	300+

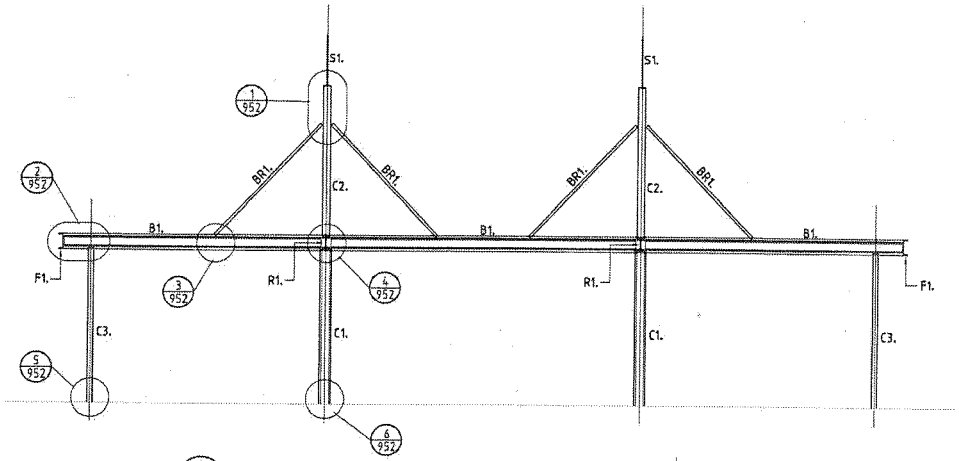

SECTION A
1:50

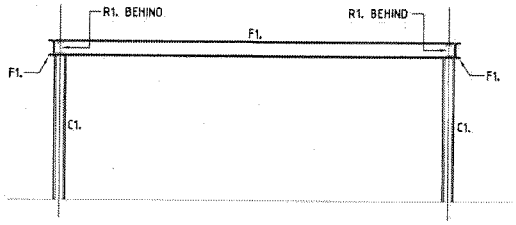

SECTION B
1:50

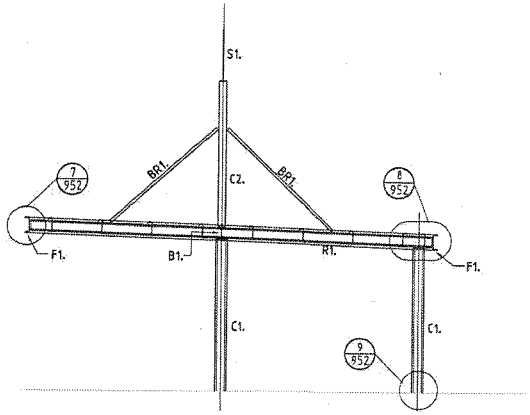

SECTION C
1:50

FOR INFORMATION ONLY

REV.	DATE	DESCRIPTION	P.O.
1	25/3/96	ISSUED FOR CONSTRUCTION	D.L.
0	1/11/95	TENDER ISSUE	D.L.

1:50 1000 0 1000 2000 3000 4000mm

QUALITY RECORD	NAME	SIGNATURE	DATE
DRAFTER	D.M.		
DESIGNER CHECK	L.T.		
PROJECT DIRECTOR APPROVAL			

MAUNSELL PROPRIETARY LIMITED
Planners & Environmental Scientists
A.C.N. 004 845 824

CLIENT: Brisbane City — Brisbane Transport

PROJECT TITLE: BRISBANE FERRY TERMINALS
DRG. TITLE: SHELTER STEELWORK FRAMING MARKING PLANS

DATE OF ISSUE: 25/3/96 | SIZE: A1
CAD REFERENCE: J:\23795\DESIGN\B30-951.DWG
DRG. No.: B30-951 | REV.: 1
DRG. STATUS: FOR CONSTRUCTION

BCC.133.0046

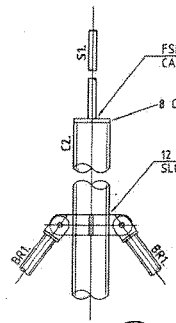

DETAIL 1 / 951 — 1:10

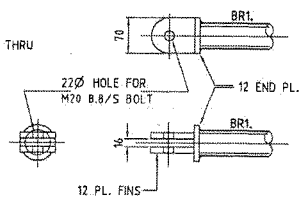

BR1 END PL.'s DETAIL — 1:5

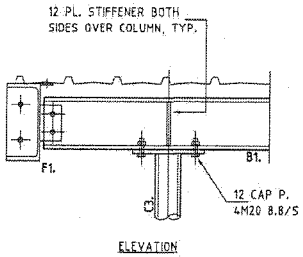

ELEVATION

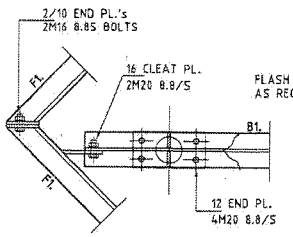

PLAN

DETAIL 2 / 951 — 1:10

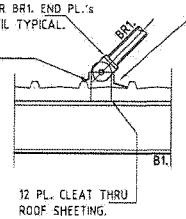

DETAIL 3 / 951 — 1:10

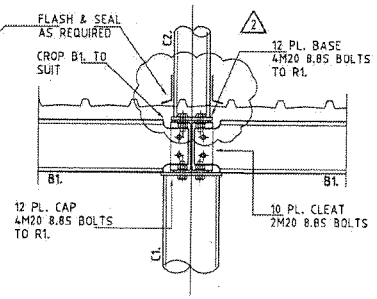

DETAIL 4 / 951 — 1:10

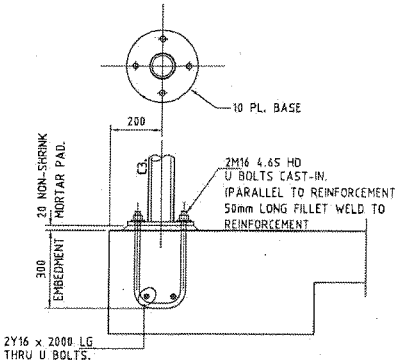

DETAIL 5 / 951 — 1:10

NOTE: LOUVRE MULLION SUPPORT SIMILAR.

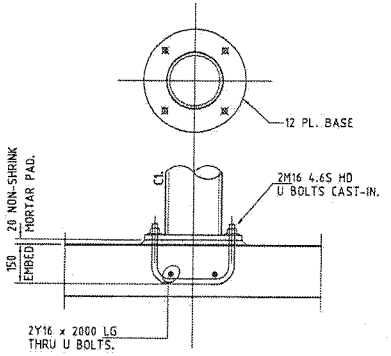

DETAIL 6 / 951 — 1:10

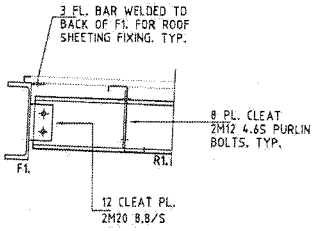

DETAIL 7 / 951 — 1:10

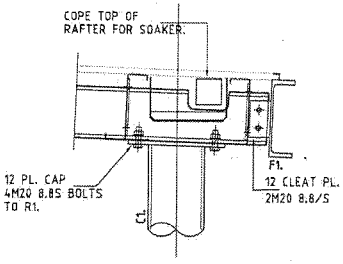

DETAIL 8 / 951 — 1:10

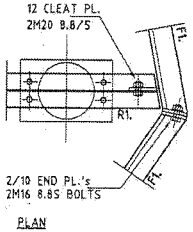

PLAN

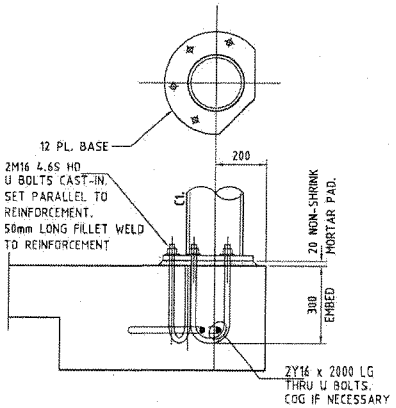

DETAIL 9 / 951 — 1:10

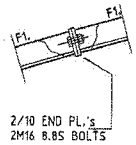

DETAIL 10 / 951 — 1:10

FOR INFORMATION ONLY

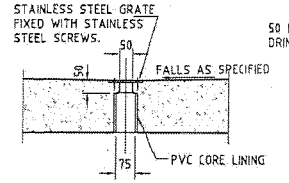

FLOOR WASTE OUTLET

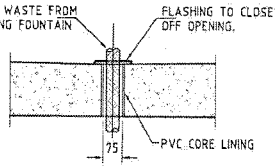

DRINKING FOUNTAIN WASTE OUTLET

REV.	DATE	DESCRIPTION	P.D.
4	12/4/96	RELOCATION OF DETAILS	D.L.
3	28/3/96	GENERAL REVISIONS	D.L.
2	25/3/96	FOR CONSTRUCTION ISSUE	D.L.
1	15/12/95	GENERAL REVISION AS CLOUDED	D.L.
0	1/11/95	TENDER ISSUE	D.L.

1:5 — 100 0 100 200 300 400mm

1:10 — 200 0 200 400 600 800mm

QUALITY RECORD	NAME	SIGNATURE	DATE
DRAFTER	P.J.T.		
DESIGNER CHECK	I.P.C.R.		
PROJECT DIRECTOR APPROVAL			

MAUNSELL PROPRIETARY LIMITED
Planners & Environmental Scientists.
A.C.N. 004 860 824

CLIENT: Brisbane City — Brisbane Transport

PROJECT TITLE: BRISBANE FERRY TERMINALS
DRG. TITLE: SHELTER DETAILS

DATE OF ISSUE: 12/4/96 — SIZE: A1
CAD REFERENCE: J:\23795\DESIGN\B30-952.DWG
DRG. No.: B30-952 — REV.: 4
DRG. STATUS: FOR CONSTRUCTION

33

BCC.133.0047

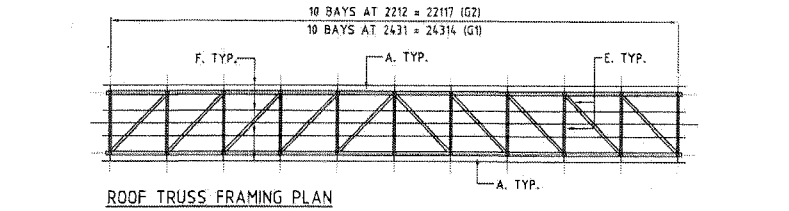

ROOF TRUSS FRAMING PLAN

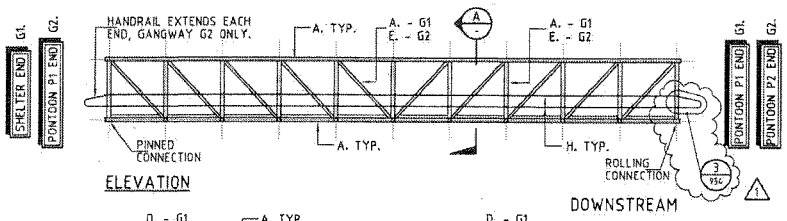

ELEVATION

DOWNSTREAM

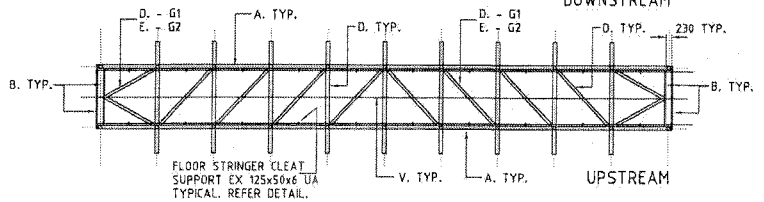

FLOOR TRUSS FRAMING PLAN - NORTH QUAY GANGWAYS

1:100 NOTE: TYPICAL GANGWAY FRAMING U.N.O.

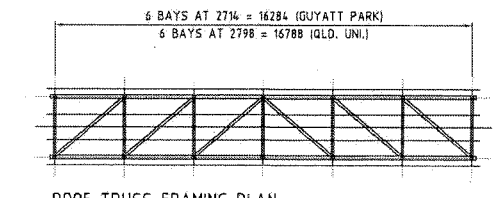

ROOF TRUSS FRAMING PLAN

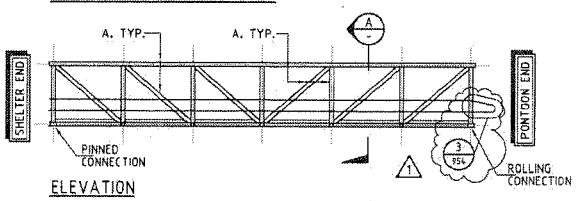

ELEVATION

DOWNSTREAM

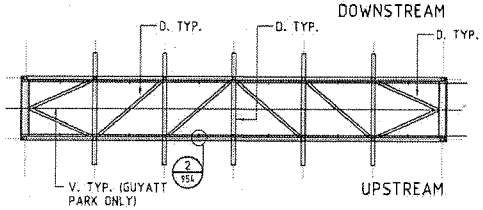

FLOOR TRUSS FRAMING PLAN - QLD. UNI. & GUYATT PARK GANGWAYS

1:100

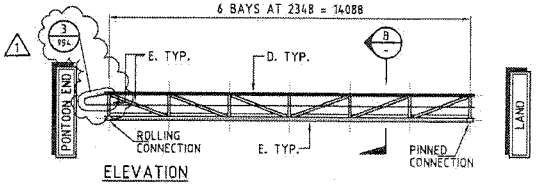

ELEVATION

DOWNSTREAM

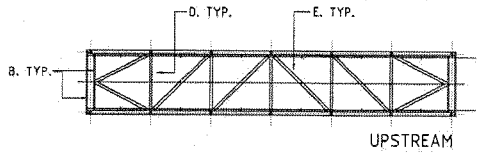

FLOOR TRUSS FRAMING PLAN - SOUTHBANK GANGWAY

1:100

MEMBER SCHEDULE			CONALCO
MARK.	DESCRIPTION	SIZE	EXTRUSION No.
A.	TRUSS FRAMING	152 x 4.75 CHS	E 40252
B.	TRUSS FRAMING	100 x 50 PFC	
C.	NOT USED		
D.	TRUSS FRAMING	100 x 5.0 CHS	E 40218
E.	TRUSS FRAMING	100 x 4.0 CHS	E 40579
F.	TRUSS FRAMING	64 x 3.2 SHS	E 6230
G.	NOT USED		
H.	HAND & KNEE RAIL	50 x 3.0 CHS	E 40543
J.	TRUSS FRAMING	50 x 4.0 CHS	E 40544
K.	NOT USED		
T.	TOE BOARD	125 x 50 x 6 UA	E 20700
U.	WALKWAY SECTION	-	E 25428
V.	STIFFENER	75 x 50 x 6 UA	E 20693

NOTES

1. ALL GANGWAY MEMBERS ARE ALUMINIUM GRADE 6061-T6.
2. G1. DENOTES GANGWAY FROM N.Q. TO PONTOON 1. G2. DENOTES GANGWAY FROM PONTOON 1 TO PONTOON 2.
3. REFER DRAWING B30-954 FOR ROLLING & PINNED GANGWAY CONNECTION DETAILS.
4. REFER ELECTRICAL DRAWINGS 919,929,939 & 949

Xref A1MPLSHT

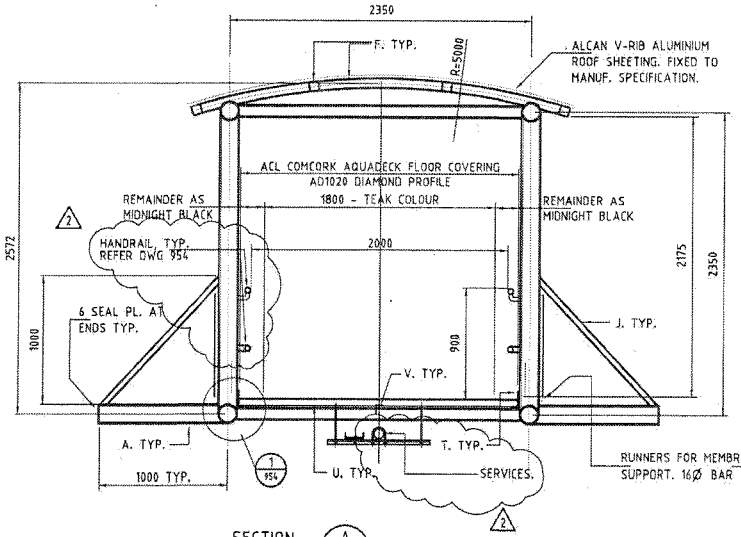

SECTION A

1:20

NOTE: FOR FLOORING COVERING & COLOURING REFER TO SECTION A. OPPOSITE.

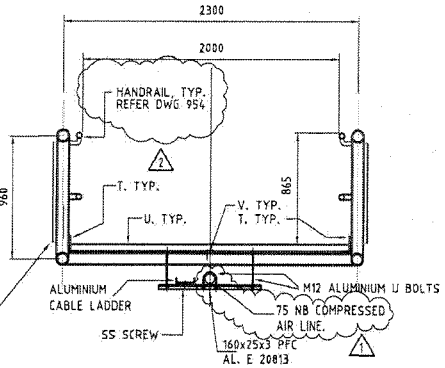

SECTION B

1:20

NOTE

PROVIDE NEOPRENE PADS OR EQUIV. INSULATION TO TO ALL PIPE/CABLE LADDER/BRACKET/STRAP INTERFACES. BOLT PADS TO BRACKETS. USE ALUMINIUM NUTS, BOLTS & WASHERS.

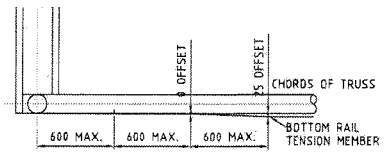

DETAIL - B

Scale 1:20

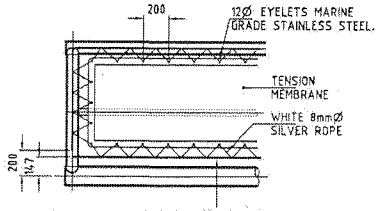

16Ø SOLID ALUMINIUM ROD WELDED TO SIDE OF GANGWAY WITH 25x6 PL. CLEATS ON TRUSS VERTICALS & DIAGONALS TO SUPPORT TOP EDGE OF TENSION MEMBRANE & AT 600 CTRS. AT ENDS & ALONG BOTTOM EDGE OF TENSION MEMBRANE.

TENSION MEMBRANE LACING DETAILS

1:20

FOR INFORMATION ONLY

REV.	DATE	DESCRIPTION	P.D.
3	7/96	DETAILS AMMENDED	
2	25/3/96	FOR CONSTRUCTION ISSUE	D.L.
1	15/12/95	GENERAL REVISION AS CLOUDED	D.L.
0	1/11/95	TENDER ISSUE	D.L.

1:100 2000 0 2000 4000 6000 8000mm

1:20 400 0 400 800 1200 1600mm

QUALITY RECORD	NAME	SIGNATURE	DATE
DRAFTER	P.J.T.		
DESIGNER CHECK	I.P.C.R.		
PROJECT DIRECTOR APPROVAL			

MAUNSELL PROPRIETARY LIMITED

Planners & Environmental Scientists.

A.C.N. 006 560 824

CLIENT: Brisbane City — Brisbane Transport

PROJECT TITLE: BRISBANE FERRY TERMINALS

DRG. TITLE: GANGWAY FRAMING PLANS AND DETAILS SHEET 1

DATE OF ISSUE: JULY '96

SIZE: A1

CAD REFERENCE: J:\23795\DESIGN\B30-953.DWG

DRG. No: B30-953

REV: 3

DRG. STATUS: FOR CONSTRUCTION

BCC.133.0048

FOR INFORMATION ONLY

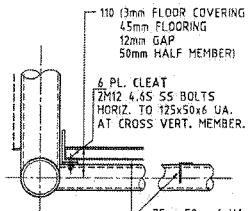

DETAIL 1 (953) 1:10

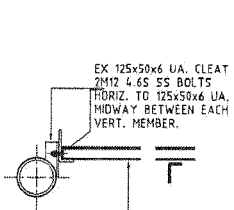

DETAIL 2 (953) 1:10

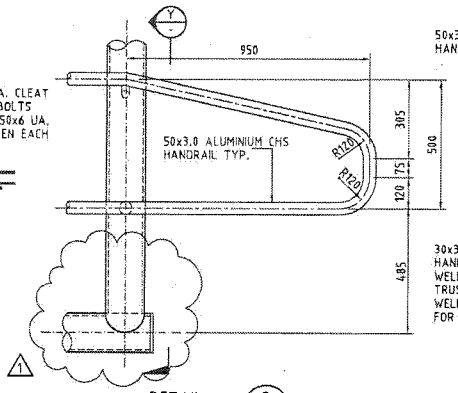

DETAIL 3 (953) 1:10

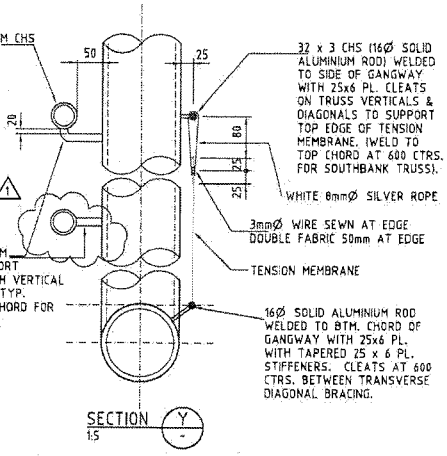

SECTION Y 1:5

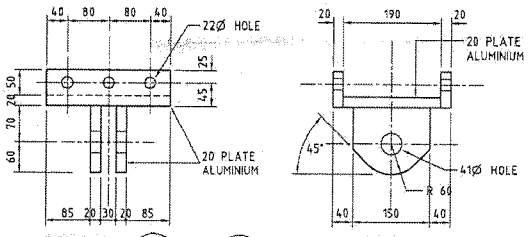

GANGWAY TOP HINGE DETAIL 1:5

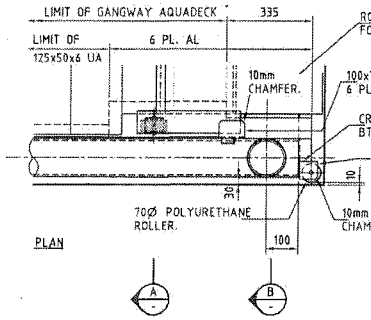

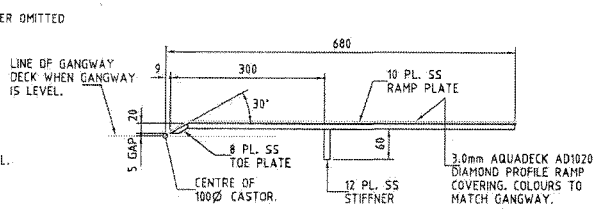

BRIDGING RAMP DETAIL 1:5

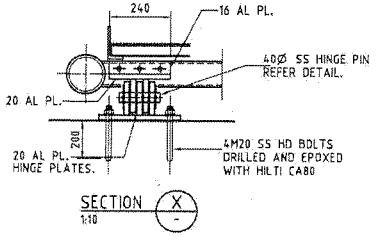

SECTION X 1:10

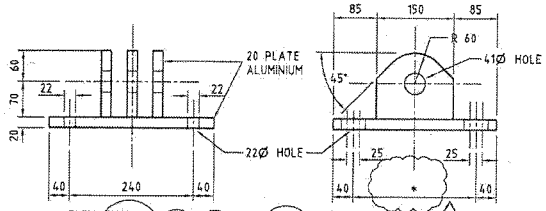

GANGWAY BOTTOM HINGE DETAIL
1:5 TOP & BOTTOM HINGES TO BE MANUFACTURED IN SETS AND CHECKED FOR FIT BEFORE INSTALLATION
* TO BE DECIDED ON SITE TO FIT AROUND CAST-IN PILE CAP

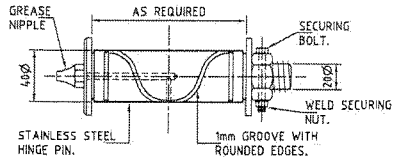

GANGWAY HINGE PIN DETAIL 1:2
SIMILAR DETAIL FOR 32mm Ø PIN FOR ROLLERS AT OTHER END OF GANGWAY.

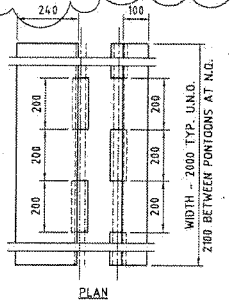

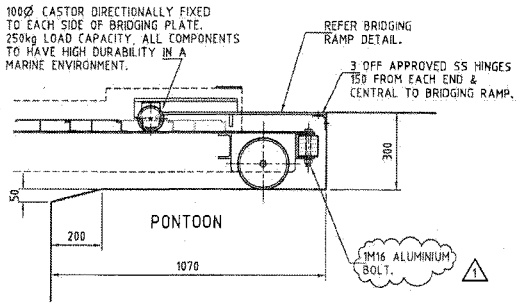

ELEVATION
GANGWAY ROLLING CONNECTION
1:10
DETAIL & DIMENSIONS ARE SETOUT WHEN GANGWAY IS LEVEL.

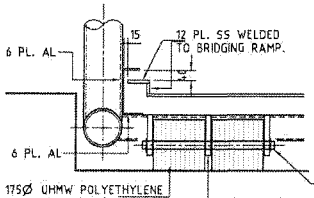

SECTION B 1:10

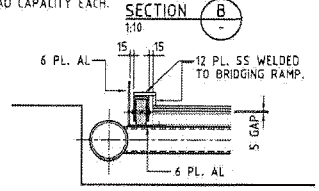

SECTION A 1:10

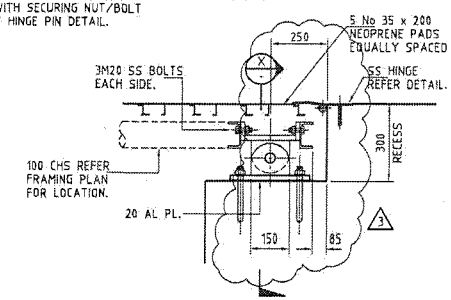

GANGWAY PINNED CONNECTION 1:10
(PINNED CONNECTION TO NORTH QUAY PONTOON SIMILAR)

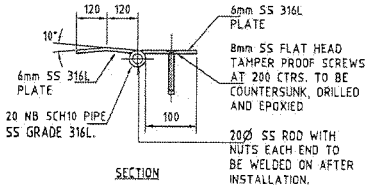

SS HINGE DETAIL
1:5

REV.	DATE.	DESCRIPTION	P.D.
4	2/5/96	DIMENSION AMENDED	D.L.
3	26/3/96	CHANGES TO BOX OUT	D.L.
2	25/3/96	ISSUED FOR CONSTRUCTION	D.L.
1	15/12/95	GENERAL REVISION AS CLOUDED	D.L.
0	1/11/95	TENDER ISSUE	D.L.

1:20 400 0 400 800 1200 1600mm
1:10 200 0 200 400 600 800mm
1:5 100 0 100 200 300 400mm

QUALITY RECORD	NAME	SIGNATURE	DATE
DRAFTER	D.M.		
DESIGNER CHECK	L.T.		
PROJECT DIRECTOR APPROVAL			

MAUNSELL PROPRIETARY LIMITED
Planners & Environmental Scientists.
A.C.N. 004 848 824

CLIENT: Brisbane City — Brisbane Transport

PROJECT TITLE	BRISBANE FERRY TERMINALS
DRG. TITLE	GANGWAY FRAMING DETAILS SHEET 2
DATE OF ISSUE	2/5//96
SIZE	A1
CAD REFERENCE	J-23795/DESIGN/B30-954.DWG
DRG. No.	B30-954
REV.	4
DRG. STATUS	FOR CONSTRUCTION

BCC.139.0049

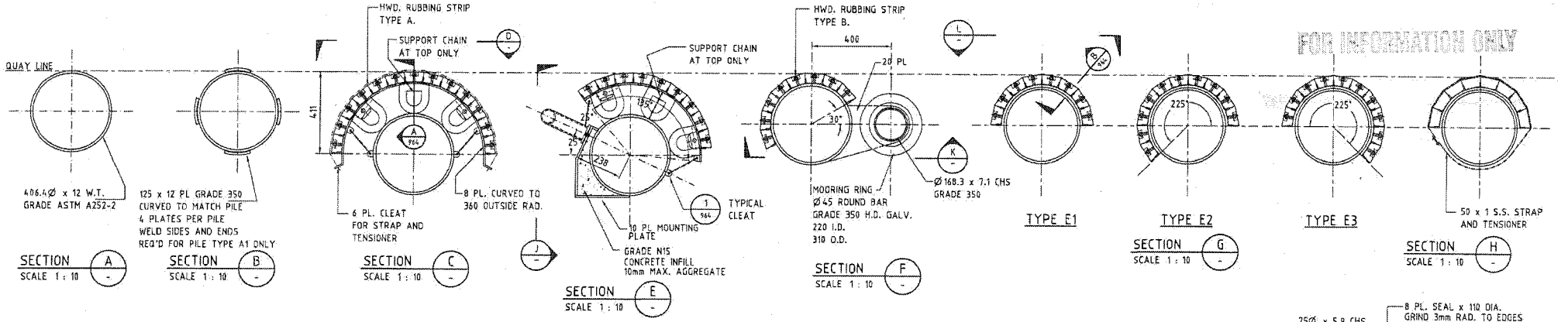

FOR INFORMATION ONLY

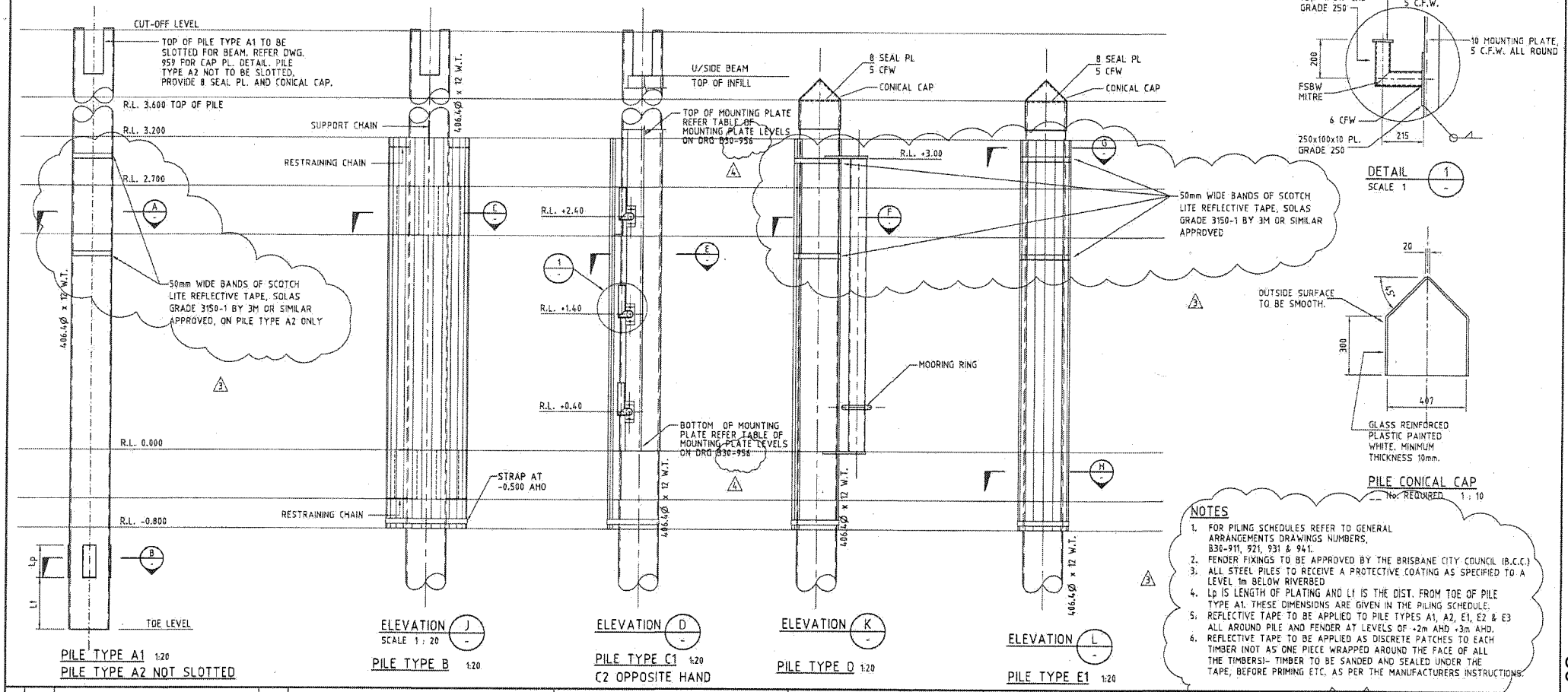

PILE TYPE A1 1:20
PILE TYPE A2 NOT SLOTTED

PILE TYPE B 1:20

PILE TYPE C1 1:20
C2 OPPOSITE HAND

PILE TYPE D 1:20

PILE TYPE E1 1:20

PILE CONICAL CAP
No. REQUIRED 1 : 10

NOTES

1. FOR PILING SCHEDULES REFER TO GENERAL ARRANGEMENTS DRAWINGS NUMBERS, B30-911, 921, 931 & 941.
2. FENDER FIXINGS TO BE APPROVED BY THE BRISBANE CITY COUNCIL (B.C.C.)
3. ALL STEEL PILES TO RECEIVE A PROTECTIVE COATING AS SPECIFIED TO A LEVEL 1m BELOW RIVERBED
4. Lp IS LENGTH OF PLATING AND Lf IS THE DIST. FROM TOE OF PILE TYPE A1. THESE DIMENSIONS ARE GIVEN IN THE PILING SCHEDULE.
5. REFLECTIVE TAPE TO BE APPLIED TO PILE TYPES A1, A2, E1, E2 & E3 ALL AROUND PILE AND FENDER AT LEVELS OF +2m AHD +3m AHD.
6. REFLECTIVE TAPE TO BE APPLIED AS DISCRETE PATCHES TO EACH TIMBER (NOT AS ONE PIECE WRAPPED AROUND THE FACE OF ALL THE TIMBERS)- TIMBER TO BE SANDED AND SEALED UNDER THE TAPE, BEFORE PRIMING ETC. AS PER THE MANUFACTURERS INSTRUCTIONS.

REV.	DATE	DESCRIPTION	P.D.
5	7/96	DETAILS AMMENDED	D.L.
4	2/5/96	DRAWING REFERENCE AMENDED	D.L.
3	28/3/96	REFLECTIVE TAPE ADDED	D.L.
2	25/3/96	REDESIGN/REDRAW FOR CONSTRUCTION	D.L.

QUALITY RECORD	NAME	SIGNATURE	DATE
DRAFTER	G.P.		
DESIGNER CHECK	I.R.		
PROJECT DIRECTOR APPROVAL			

MAUNSELL PROPRIETARY LIMITED
Planners & Environmental Scientists.
A.C.N. 004 846 824

CLIENT.
Brisbane City
Brisbane Transport

PROJECT TITLE: BRISBANE FERRY TERMINALS
DRG. TITLE: PILE AND FENDER DETAILS SHEET 1
DATE OF ISSUE: JULY 96
SIZE: A1
CAD REFERENCE: J\23795\DESIGN\B30-955.DWG
DRG. No.: B30-955
REV.: 5
DRG. STATUS: FOR CONSTRUCTION

DOC.130.0050

FOR INFORMATION ONLY

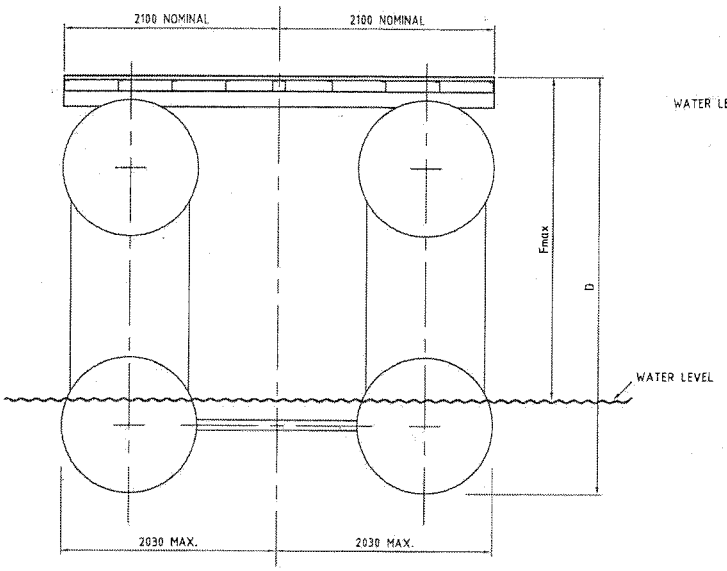

BASE PONTOON SECTION (TYPICAL)
SCALE 1:25

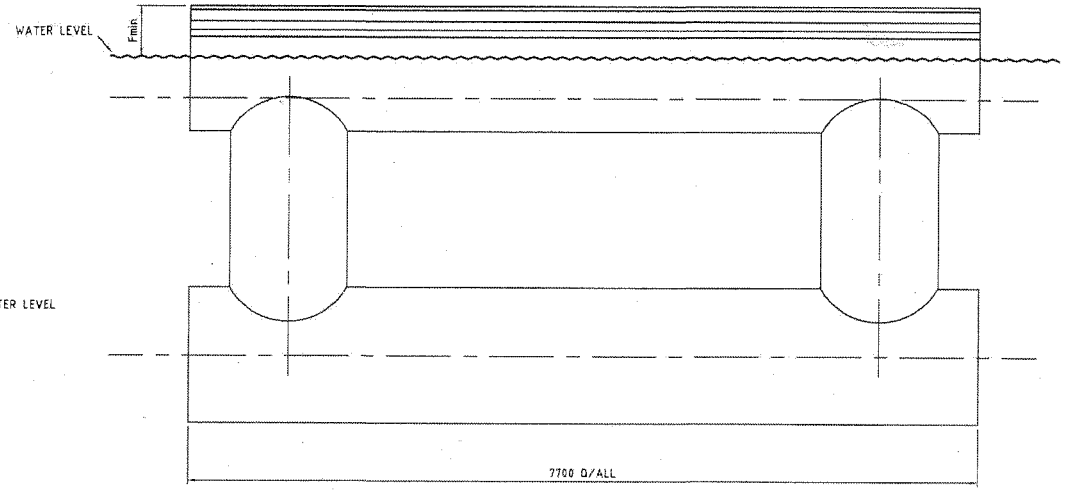

BASE PONTOON ELEVATION (TYPICAL)
SCALE 1:25

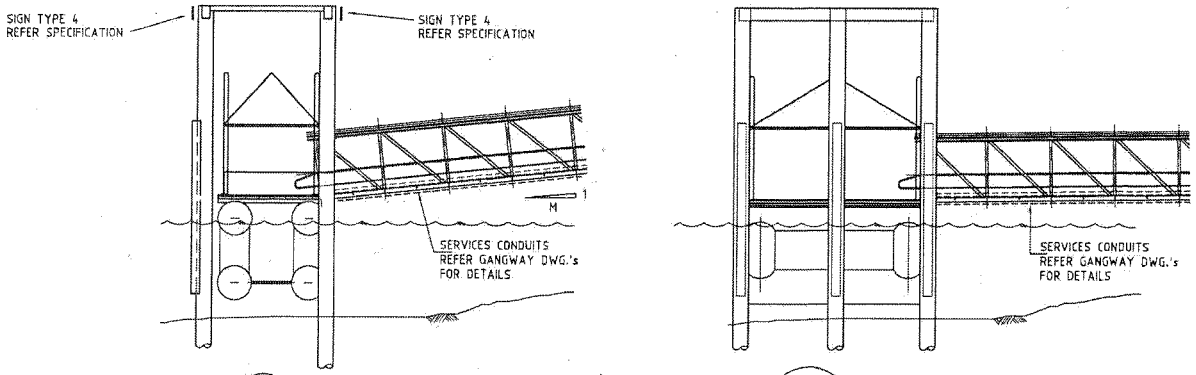

TYPICAL ELEVATIONS OF PONTOON AT NORTH QUAY

C-DOCK 195 REQUIREMENTS

PONTOON	MAXIMUM FREEBOARD (Fmax)	MINIMUM FREEBOARD (Fmin)	MAXIMUM PONTOON DEPTH (D)	UNDERKEEL CLEARANCE (m)	MINIMUM RIVERBED LEVEL (m AHD)	GANGWAY SLOPE TO A.S.1428.1 (1:M)
NORTH QUAY 1	1.4	0.5	3.2	0.3	-4.3	1:25
NORTH QUAY 2	0.95	0.95	3.2	0.3	-4.3	1:24
SOUTH BANK 1 & 2	2.1	0.5	3.4	0.3	-4.5	1:19
GUYATT PARK	2.7	0.6	3.8	0.3	-4.6	1:29
OLD UNIVERSITY	2.7	0.6	3.8	0.3	-4.6	1:28

NOTES:
1. GANGWAY SLOPES GIVEN FOR CONTROL DESIGN PURPOSES
2. PONTOON SUPPLIED BY OTHERS, THE PONTOON SHOWN ON THESE DRAWINGS IS DIAGRAMATIC ONLY.

TABLE OF LEVELS OF MOUNTING PLATE ON PILES C1, C2

TERMINAL	PILE	TOP OF MOUNTING PLATE	BOTTOM OF MOUNTING PLATE
QUEENSLAND UNIVERSITY	C1 C2	+3.2 (U/S BEAM) +7.2	0.0
GUYATT PARK	C1 C2	+3.2 (U/S BEAM) +6.4	-0.8
NORTH QUAY	2 NO C1 2 NO C2	+3.2 (U/S BEAM) +5.4	-0.8
SOUTH BANK	2 NO C1 2 NO C2	(U/S BEAM) +6.4 +3.2	-0.8

REV.	DATE	DESCRIPTION	P.D.
3	2/5/96	GENERAL REVISIONS	D.L.
2	25/3/96	ISSUED FOR CONSTRUCTION	D.L.
1	15/12/95	GENERAL REVISION AS CLOUDED	D.L.
0	1/11/95	TENDER ISSUE	D.L.

1:25 0 0.5 1 1.5 2m (FULL SIZE)
1:200 0 4 8 12 16m (FULL SIZE)

QUALITY RECORD	NAME	SIGNATURE	DATE
DRAFTER	D.M.S.		
DESIGNER/CHECK	I.P.C.R.		
PROJECT DIRECTOR APPROVAL			

MAUNSELL PROPRIETARY LIMITED
Planners & Environmental Specialists
A.C.N. 004 868 026

CLIENT: Brisbane City — Brisbane Transport

PROJECT TITLE: BRISBANE FERRY TERMINALS
ORG. TITLE: C-DOCK 195 GENERAL ARRANGEMENT

DATE OF ISSUE: 2/5/96 | SIZE: A1
CAD REFERENCE: J:\23795\DESIGN\B30-956.DWG
ORG. No.: B30-956 | REV.: 3
ORG. STATUS: FOR CONSTRUCTION

37

BCC.133.0051

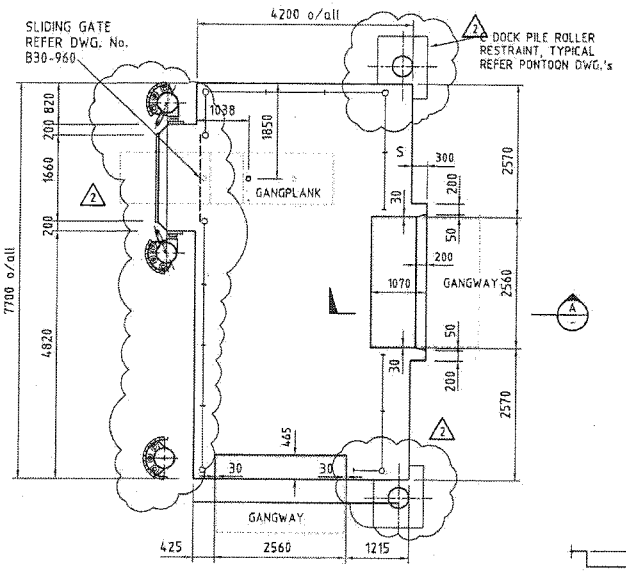

NORTH QUAY (PONTOON 1.) SCALE 1:50
PONTOON DECK SETOUT

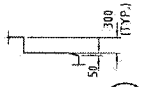

SECTION A
1:50

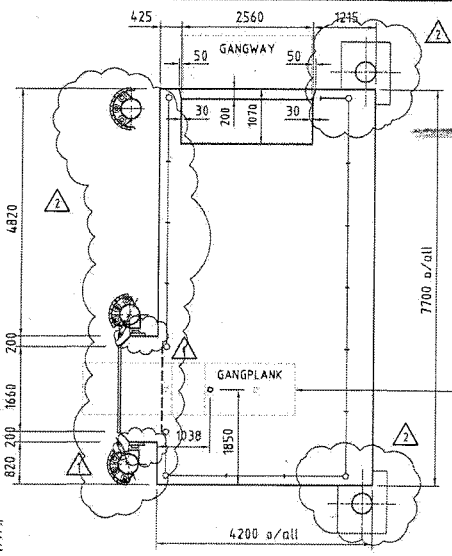

NORTH QUAY (PONTOON 2.) SCALE 1:50
PONTOON DECK SETOUT

FOR INFORMATION ONLY

GANGPLANK ANCHORING RESTRAINT FIXING POINT ON PONTOON. FIXING POINT TO BE LOCATED WITHIN A GROOVE.

FIBREGLASS GANGPLANK WITH STAINLESS STEEL HANDRAIL ON BOTH SIDES BY HUDSON BOAT BUILDERS OR EQUIVALENT (TYP.)

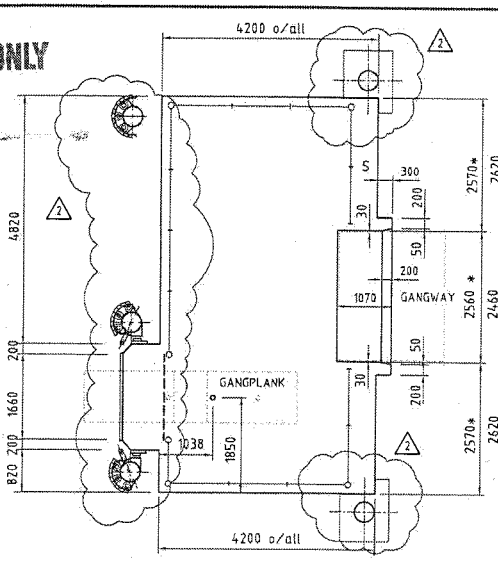

SOUTH BANK (PONTOON 1.) SCALE 1:50
QUEENSLAND UNIVERSITY, GUYATT PARK SIMILAR U.N.O. *
SOUTH BANK (PONTOON 2.) OPP. HAND
PONTOON DECK SETOUT

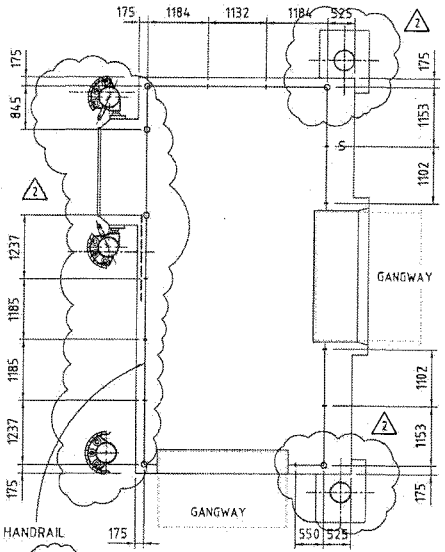

NORTH QUAY (PONTOON 1.) SCALE 1:50
PONTOON ROOF COLUMN AND HANDRAIL SETOUT

LEGEND
S - LOCATION OF SIGNS INCORPORATED INTO HANDRAILS

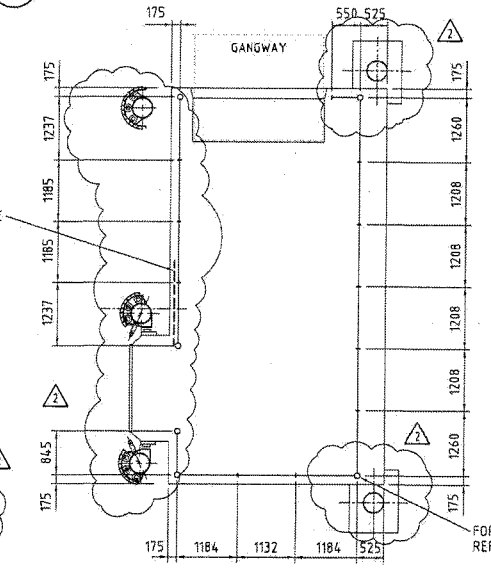

NORTH QUAY (PONTOON 2.) SCALE 1:50
PONTOON ROOF COLUMN AND HANDRAIL SETOUT

GUYATT PARK AND QUEENSLAND UNIVERSITY MOORING BOLLARDS MAX. MOORING LOAD=60kN

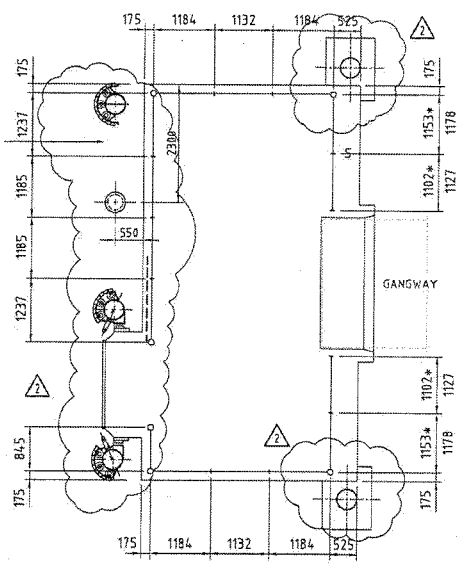

SOUTH BANK (PONTOON 1.) SCALE 1:50
QUEENSLAND UNIVERSITY, GUYATT PARK SIMILAR U.N.O. *
SOUTH BANK (PONTOON 2.) OPP. HAND (EXCEPT FOR SIGNS)
PONTOON ROOF COLUMN AND HANDRAIL SETOUT

FOR INFORMATION ONLY - PONTOONS SUPPLIED BY OTHERS & TOWED TO SITE BY B.C.C. UNDER SEPARATE CONTRACT.
HANDRAILS, ROOF & SLIDING GATE TO BE SUPPLIED & INSTALLED BY CONTRACTOR. GANGPLANKS BY OTHERS.

NOTE: ALL PONTOONS TO HAVE A TIMBER DECK SURFACE

REV.	DATE	DESCRIPTION	P.D.
2	25/3/96	ISSUED FOR CONSTRUCTION	D.L.
1	15/12/95	GENERAL REVISION	D.L.
0	1/11/95	TENDER ISSUE	D.L.

1:50 1000 0 1000 2000 3000 4000mm

QUALITY RECORD	NAME	SIGNATURE	DATE
DRAWN	P.J.T.		
DESIGNER CHECK	D.L.		
PROJECT DIRECTOR APPROVAL			

MAUNSELL PROPRIETARY LIMITED
Planners & Environmental Scientists
A.C.N. 004 848 824

CLIENT: Brisbane City, Brisbane Transport

PROJECT TITLE: BRISBANE FERRY TERMINALS
DRG. TITLE: PONTOON DECK GENERAL ARRANGEMENT
DATE OF ISSUE: 25/3/96
SIZE: A1
CAD REFERENCE: J:\23795\DESIGN\B30-957.DWG
DRG. No.: B30-957
REV.: 2
DRG. STATUS: FOR CONSTRUCTION

38

BCC.138.0052

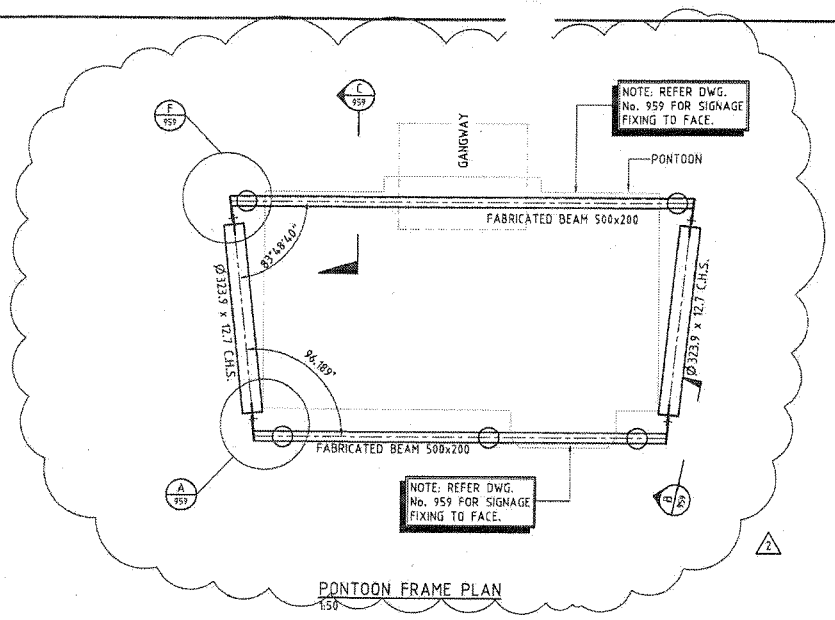

PONTOON FRAME PLAN
1:50

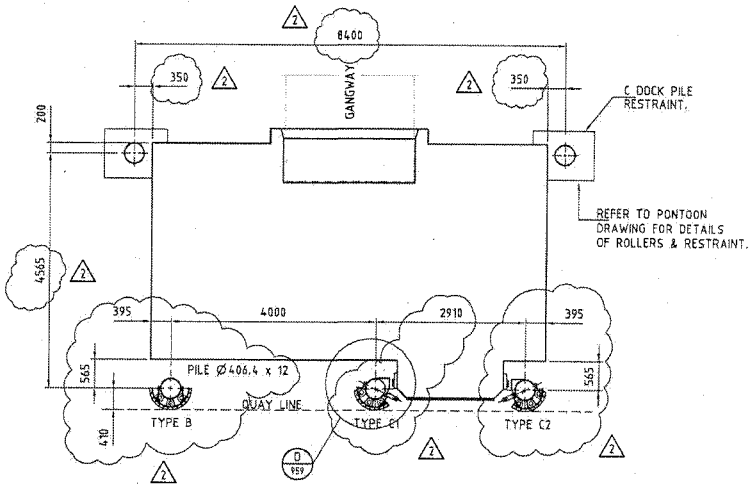

PONTOON PILE SETOUT PLAN
1:50

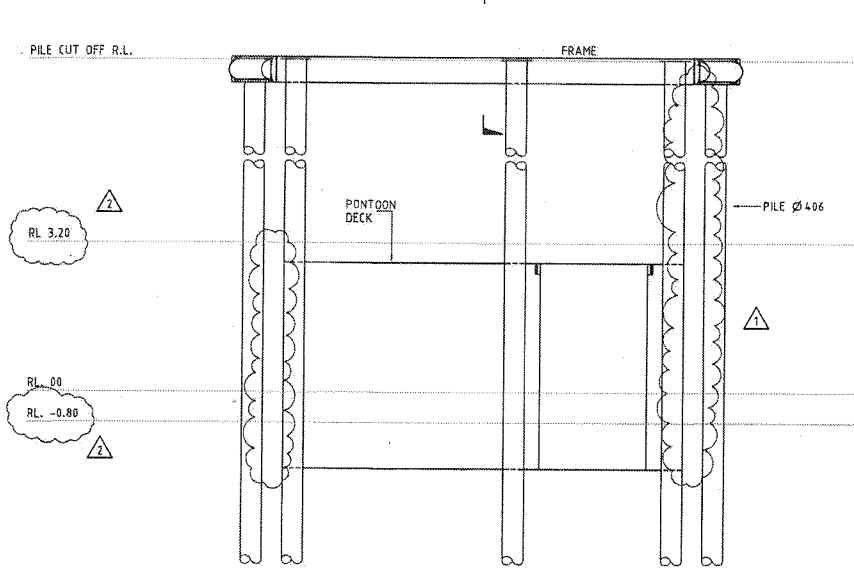

FRONT ELEVATION
1:50

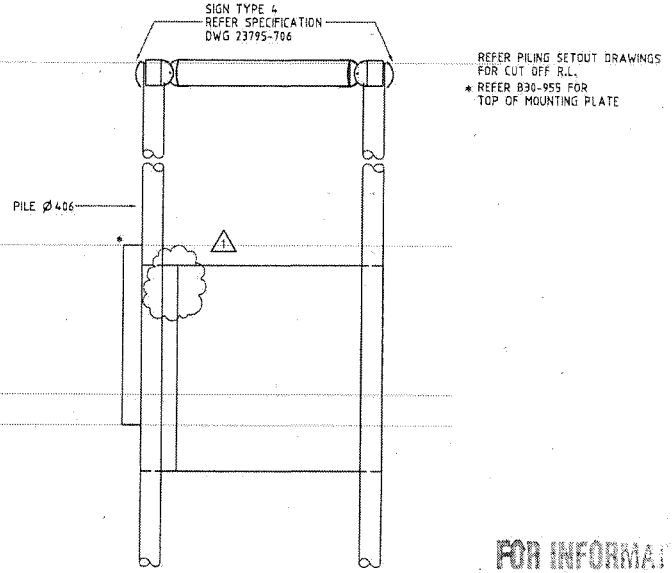

SIDE ELEVATION
1:50

FOR INFORMATION ONLY

REV.	DATE	DESCRIPTION	P.D.
3	7/96	RUBBER FENDER CHANGED	
2	25/3/96	ISSUED FOR CONSTRUCTION	D.L.
1	15/12/95	GENERAL REVISION AS CLOUDED	D.L.
0	1/11/95	TENDER ISSUE	D.L.

1:50 1000 0 1000 2000 3000 4000mm

QUALITY RECORD	NAME	SIGNATURE	DATE
DRAFTER	D.M.S.		
DESIGNER CHECK	D.L.		
PROJECT DIRECTOR APPROVAL			

MAUNSELL PROPRIETARY LIMITED
Planners & Environmental Scientists
A.C.N. 004 848 024

CLIENT: Brisbane City — Brisbane Transport

PROJECT TITLE: BRISBANE FERRY TERMINAL
DRG. TITLE: PONTOON GENERAL ARRANGEMENT OF FRAMING & RUBBING STRIPS

DATE OF ISSUE: JULY 96
SIZE: A1
CAD REFERENCE: J:\23795\DESIGN\B30-958.DWG
DRG. No.: B30-958
REV.: 3
DRG. STATUS: FOR CONSTRUCTION

BGG133.0053

FOR INFORMATION ONLY

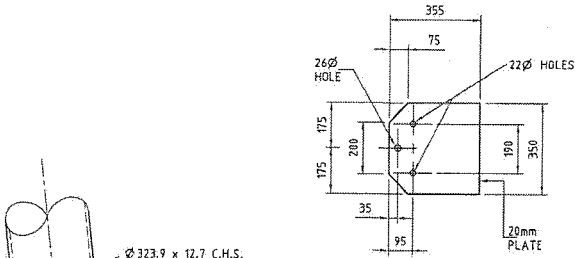

TYPE 1 - 4 No. AT EACH FRAME

CLEAT PLATE DETAILS

1:10

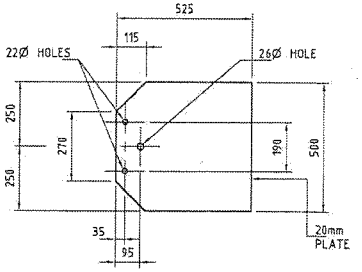

TYPE 2 - 4 No. AT EACH FRAME

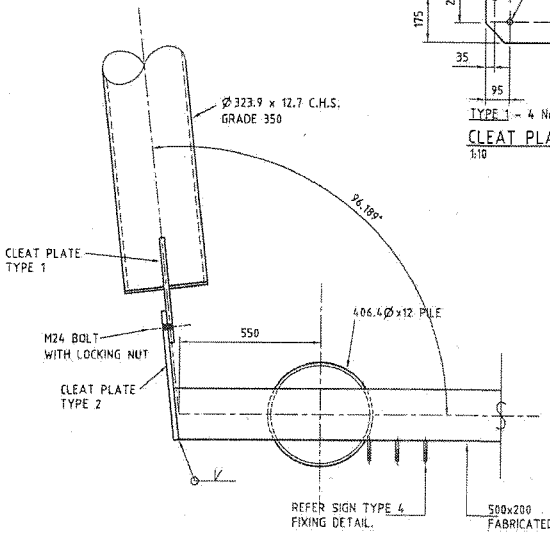

DETAIL A 1:10 958

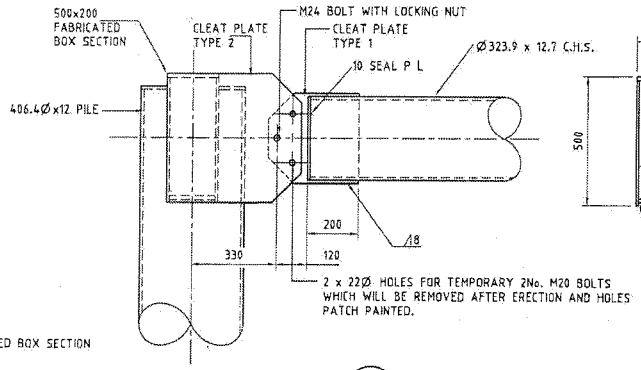

ELEVATION B 1:10 958

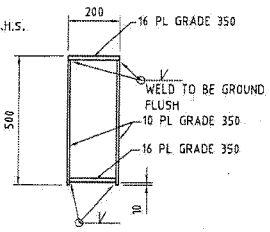

SECTION C 1:10 958

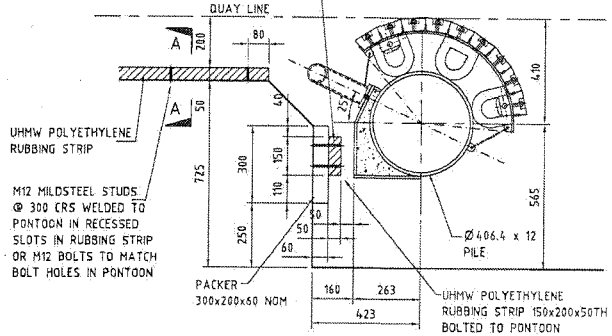

DETAIL D 1:10 958

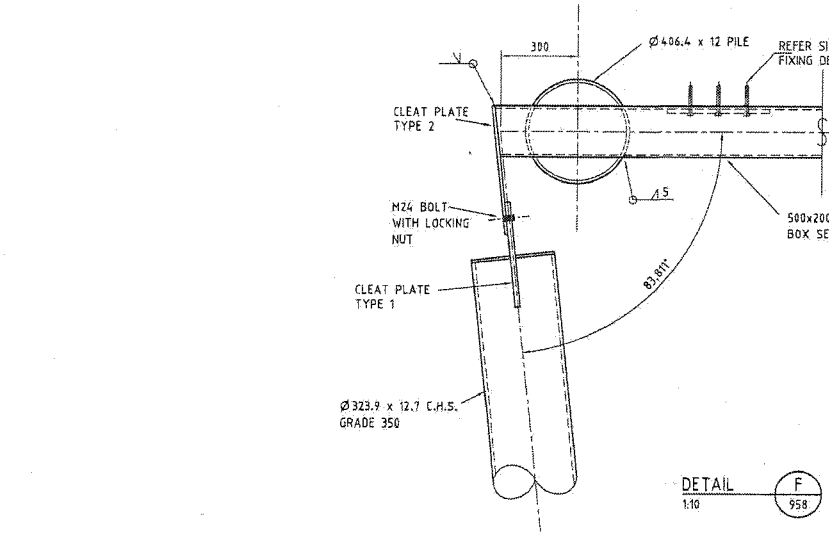

DETAIL F 1:10 958

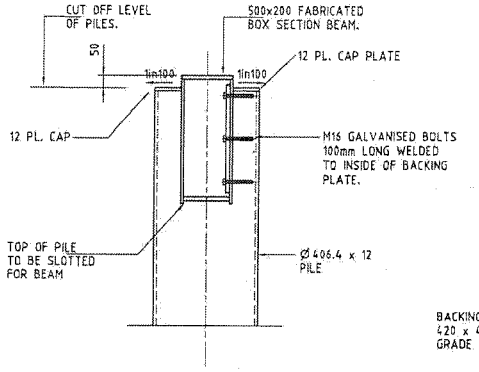

SECTION G 1:10 958

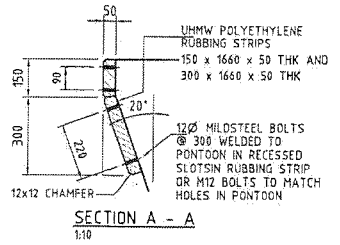

SECTION A - A

1:10

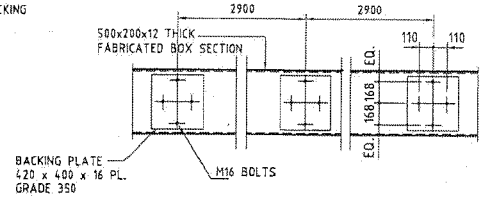

SIGN TYPE 4 FIXING DETAIL TO FACES OF PONTOON FRAME

1:20 REFER DWG 23795-706 FOR SIGN TYPE 4 DETAILS

NOTES

1. PACKERS TO BE HARDWOOD OR STEEL SHIMS.
2. ALL WELDS TO BE FULL STRENGTH BUTT WELDS TYP. U.N.O.
3. ALL HOLLOW SECTIONS TO BE SEAL WELDED

REV.	DATE	DESCRIPTION	P.D.
3	7/96	DETAILS AMMENDED	D.L.
2	25/3/96	REDESIGN/REDRAW FOR CONSTRUCTION	

1:10 200 0 200 400 600 800mm

1:20 400 0 400 800 1200 1600mm

QUALITY RECORD	NAME	SIGNATURE	DATE
DRAFTER	D.M.S		
DESIGNER CHECK	I.R.		
PROJECT DIRECTOR APPROVAL			

MAUNSELL PROPRIETARY LIMITED

Planners & Environmental Scientists.

A.C.N. 004 848 854

CLIENT.

Brisbane City

Brisbane Transport

PROJECT TITLE: BRISBANE FERRY TERMINALS

DRG. TITLE: PONTOON FRAMING & RUBBING STRIP DETAILS

DATE OF ISSUE: JULY 96

SIZE: A1

CAD REFERENCE: J:/23795/DESIGN/B30-959.DWG

DRG. No.: B30-959

REV.: 3

DRG. STATUS: FOR CONSTRUCTION

40

BCC.133.0054

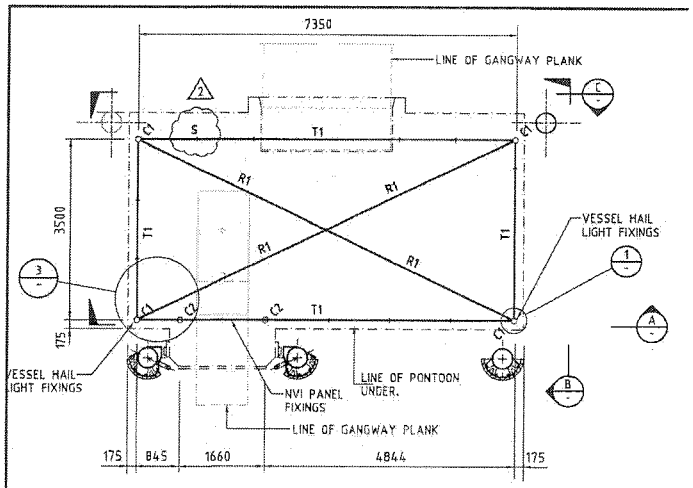

ROOF FRAMING LAYOUT
1:50

MEMBER SCHEDULE		
MARK	DESCRIPTION	
C1	COLUMN	114.3x6.0 CHS *
C2	GATE POST	76x4.5CHS GRADE 316SS
R1	RAFTER	114.3x6.0 CHS *
T1	TIE	114.3x6.0 CHS *
R2	SLIDING GATE	125x75x5 RHS *

* MEMBERS TO BE 350 GRADE HD GALV. STEEL.

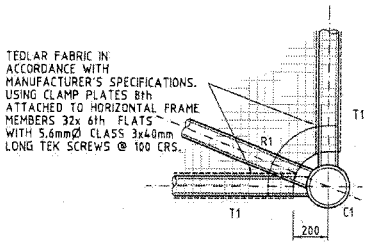

DETAIL 1
1:10

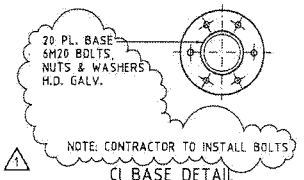

C1 BASE DETAIL
1:10



NOTE: CONTRACTOR TO INSTALL BOLTS

C2 BASE DETAIL
1:5

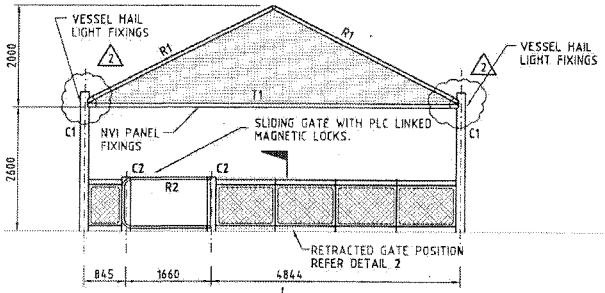

ELEVATION A
1:50

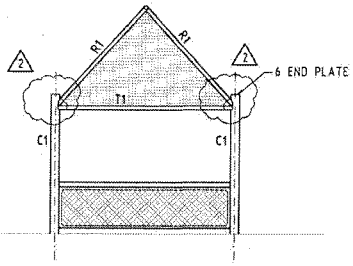

SECTION B
1:50

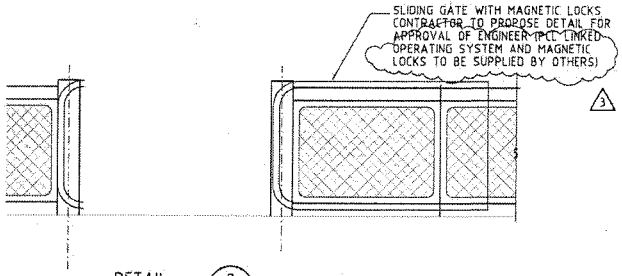

DETAIL 2
1:20

PART ELEVATION A WITH GATE IN OPEN POSITION

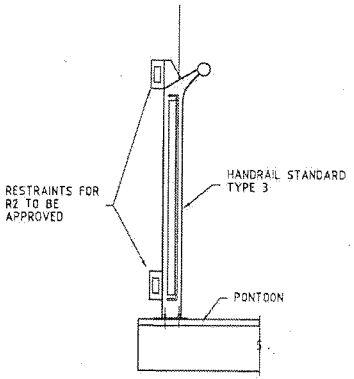

SECTION D
1:10

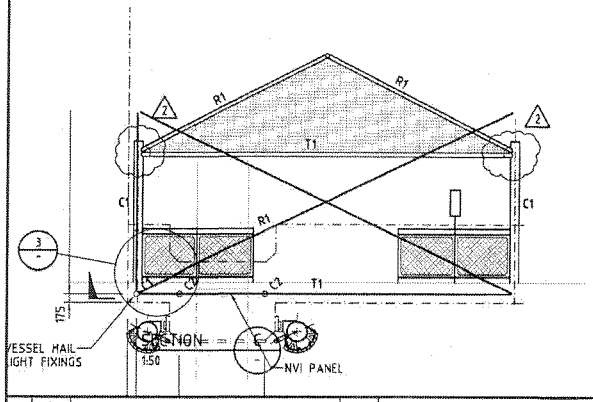

SECTION
1:50

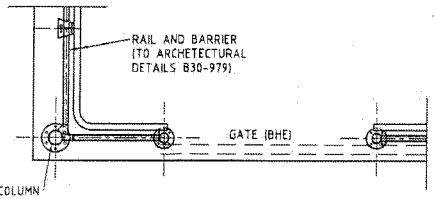

NEW TERMINALS - GATE 3
1:20

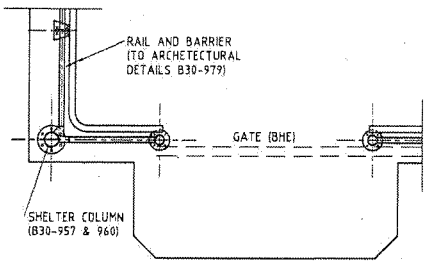

NEW TERMINALS - GATE 4
1:20

FOR INFORMATION ONLY

LEGEND

S - LOCATION OF SIGN INCORPORATED IN HANDRAIL

NOTE
FOR HANDRAIL DETAILS REFER DWG. 979.

REV.	DATE	DESCRIPTION	P.D.
3	1/4/96	NOTATION CHANGED	D.L.
2	25/3/96	ISSUED FOR CONSTRUCTION	D.L.
1	15/12/95	GENERAL REVISION AS CLOUDED	D.L.
0	1/11/95	TENDER ISSUE	D.L.

1:50 1000 0 1000 2000 3000 4000mm
1:20 400 0 400 800 1200 1600mm
1:10 200 0 200 400 600 800mm

QUALITY RECORD	NAME	SIGNATURE	DATE
DRAFTER	D.M.		
DESIGNER CHECK	L.T.		
PROJECT DIRECTOR APPROVAL			

MAUNSELL PROPRIETARY LIMITED
Planners & Environmental Scientists
A.C.N. 004 848 084

CLIENT: Brisbane Transport, Brisbane City

PROJECT TITLE: BRISBANE FERRY TERMINALS
DWG TITLE: PONTOON ROOF AND RAILING LAYOUT AND DETAILS

DATE OF ISSUE: 25/3/96
SIZE: A1
CAD REFERENCE: J:\23795\DESIGN\B30-960.DWG
DRG. No.: B30-960
REV.: 3
DRG. STATUS: FOR CONSTRUCTION

BCC.130.0055

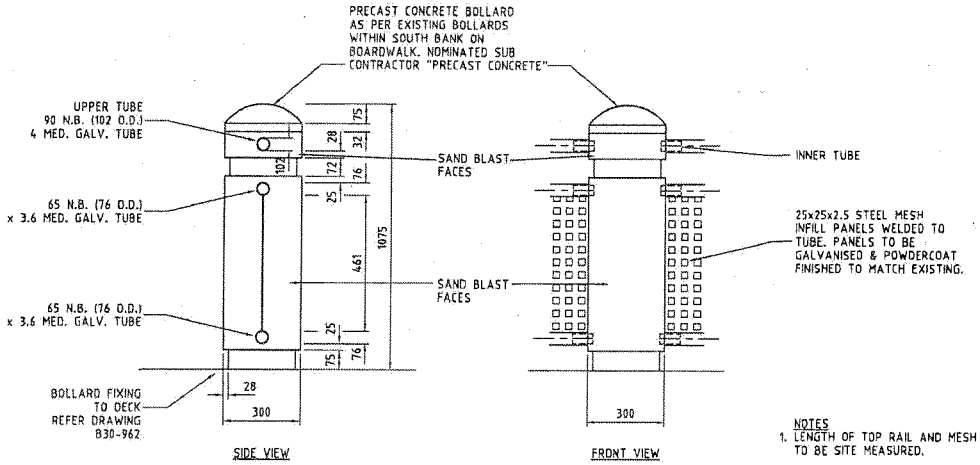

LANDING BOLLARD (SOUTH BANK ONLY)
SCALE 1:10

NOTES
1. LENGTH OF TOP RAIL AND MESH INFILL PANEL TO BE SITE MEASURED.
2. ALL METALWORK INCLUDING MESH INFILL, RAILS AND FIXINGS TO RECEIVE 2 PACK POLYURETHANE PAINT FINISH. COLOUR TO FUTURE SPECIFICATION.

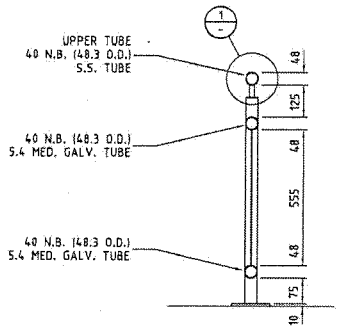

SIDE VIEW
SCALE 1:10

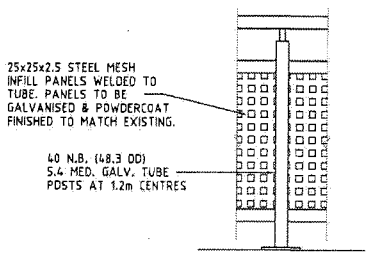

FRONT VIEW
SCALE 1:10

RAMP HANDRAIL (SOUTH BANK ONLY)

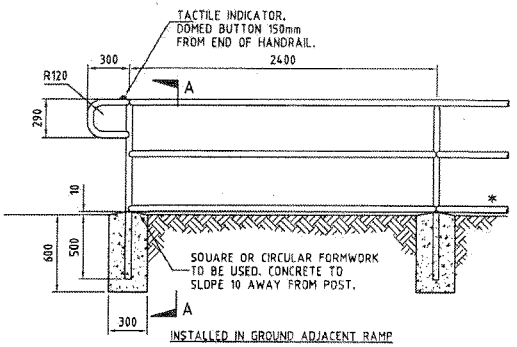

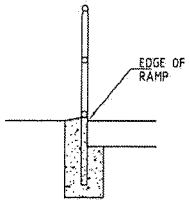

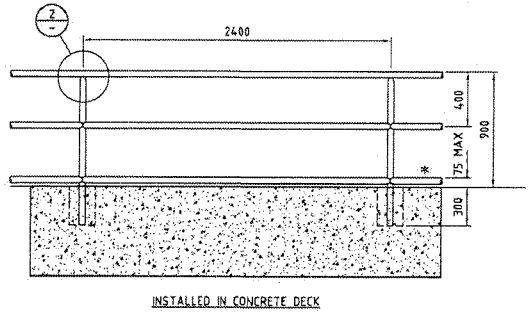

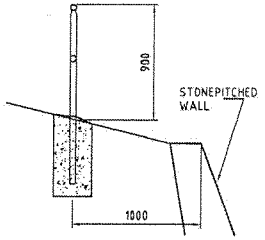

GENERAL PURPOSE GALVANISED TUBULAR RAMP HANDRAIL (FOOTPATHS AT GUYATT PARK AND QUEENSLAND UNIVERSITY)
(COMPLIES WITH AS1428.1) SCALE 1:20

* - HANDRAILS ON STONEPITCHED WALLS SIMILAR EXCEPT BOTTOM HORIZ. GALV. TUBE REMOVED. - SEE DETAIL A.

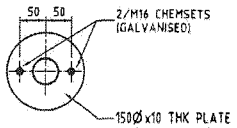

BASEPLATE DETAIL
SCALE 1:5

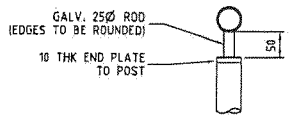

DETAIL 1
SCALE 1:5

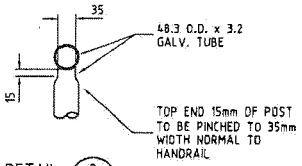

DETAIL 2
SCALE 1:5

NOTES:
1. END POSTS TO BE 50 N.B. (60.3 O.D. 3.6 THICK) GALVANISED STEEL TUBE. (AS 1163 REFERS)
2. INTERMEDIATE POSTS TO BE 40 N.B. (48.3 O.D. 3.2 THICK) GALVANISED STEEL TUBE. (AS 1163 REFERS)
3. RAILS TO BE 40 N.B. (48.3 O.D. 3.2 THICK) GALVANISED STEEL TUBE. (AS 1163 REFERS)
4. ALL WELDS TO BE 5 THICK C.F.W. (CONTINUOUS FILLET WELDS) TO AS 1554.1 WITH COLD GALVANISING TREATMENT TO COMPLETED WELDS.
5. POSTS TO BE VERTICAL.
6. ALL CONCRETE TO BE GRADE N25.
7. POSTS INSTALLED IN EXISTING CONCRETE STRUCTURES TO BE GROUTED INTO 90 DIAMETER HOLE WITH 1:3 CEMENT MORTAR AFTER THEY HAVE BEEN CAREFULLY ALIGNED.

FOR INFORMATION ONLY

REV.	DATE	DESCRIPTION	P.B.
1	25/3/96	ISSUED FOR CONSTRUCTION	D.L.
0	1/11/95	TENDER ISSUE	D.L.

QUALITY RECORD	NAME	SIGNATURE	DATE
DRAFTER	J.A.F.		
DESIGNER CHECK	P.H./D.L.		
PROJECT DIRECTOR APPROVAL			

MAUNSELL PROPRIETARY LIMITED
Planners & Environmental Scientists
A.C.N. 004 848 884

CLIENT: Brisbane City, Brisbane Transport

PROJECT TITLE: BRISBANE FERRY TERMINALS
DRG. TITLE: HANDRAIL DETAILS
DATE OF ISSUE: 25/3/96
SIZE: A1
CAD REFERENCE: J:\23795\DESIGN\B30-961.DWG
DRG. No.: B30-961
REV.: 1
DRG. STATUS: FOR CONSTRUCTION

BCC.133.0056

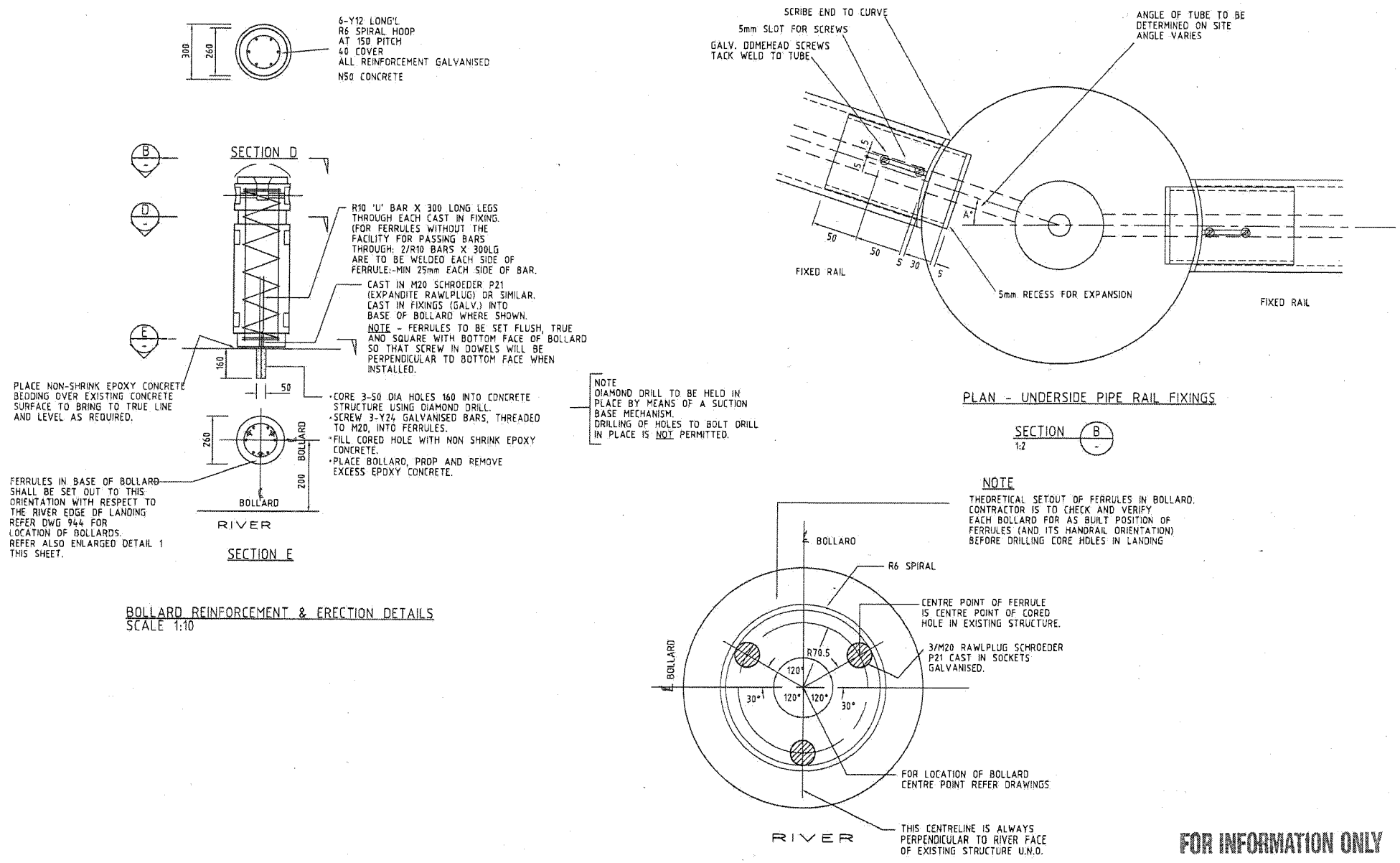

FOR INFORMATION ONLY

REV.	DATE	DESCRIPTION	P.O.
1	25/3/96	ISSUED FOR CONSTRUCTION	D.L.
0	1/11/95	TENDER ISSUE	D.L.

QUALITY RECORD	NAME	SIGNATURE	DATE
DRAFTER	J.A.F.		
DESIGNER CHECK	P.H./D.L.		
PROJECT DIRECTOR APPROVAL			

MAUNSELL PROPRIETARY LIMITED
Planners & Environmental Scientists.
A.C.N. 004 845 524

CLIENT: Brisbane City — Brisbane Transport

PROJECT TITLE: BRISBANE FERRY TERMINALS
DWG. TITLE: HANDRAIL DETAILS SHEET 2

DATE OF ISSUE: 25/3/96 — SIZE: A1
CAD REFERENCE: J:\23795\DESIGN\B30-962.DWG
DWG. No.: B30-962 — REV.: 1
DWG. STATUS: FOR CONSTRUCTION

BCC.133.0057

FOR INFORMATION ONLY

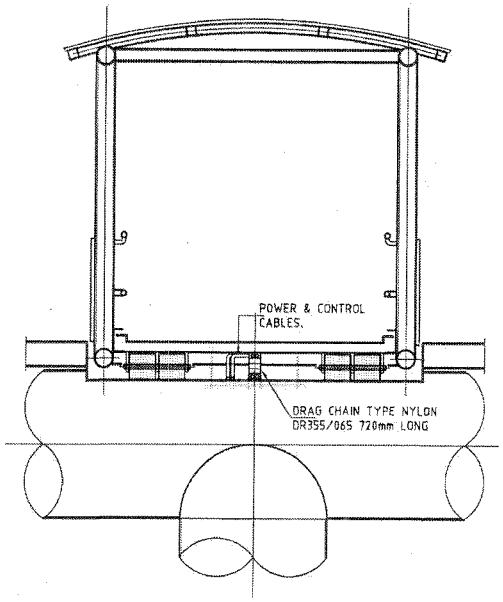

SECTION A

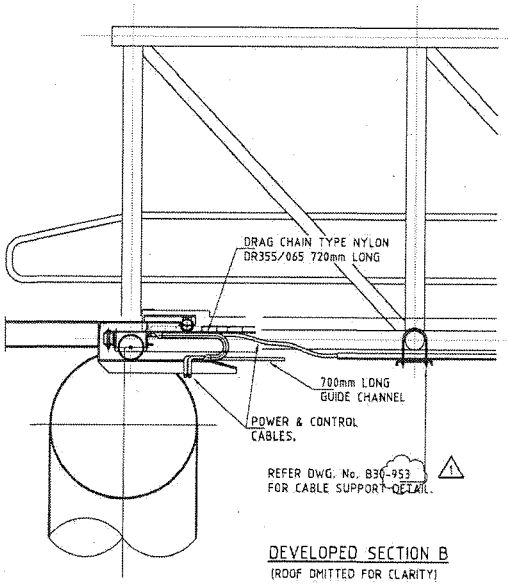

DEVELOPED SECTION B
(ROOF OMITTED FOR CLARITY)

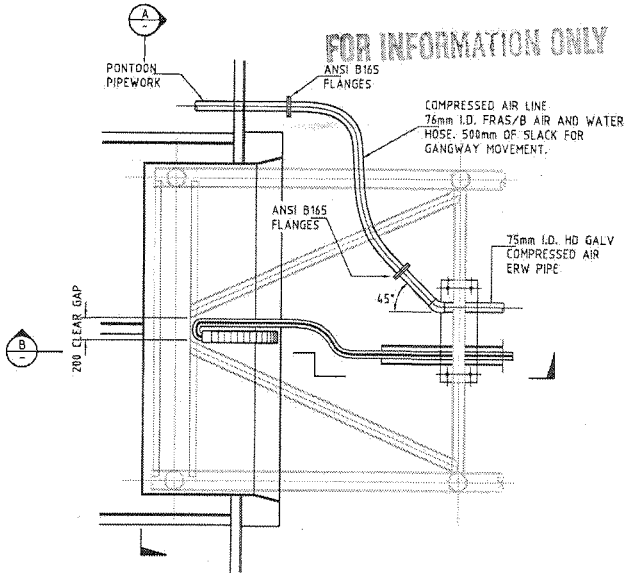

PLAN
(FLOOR & ROOF OF GANGWAY OMITTED FOR CLARITY)

GANGWAY TO PONTOON SERVICES CONNECTION
1:20

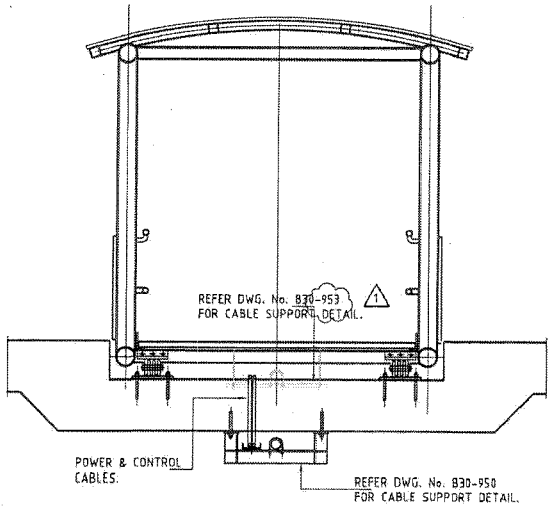

SECTION C

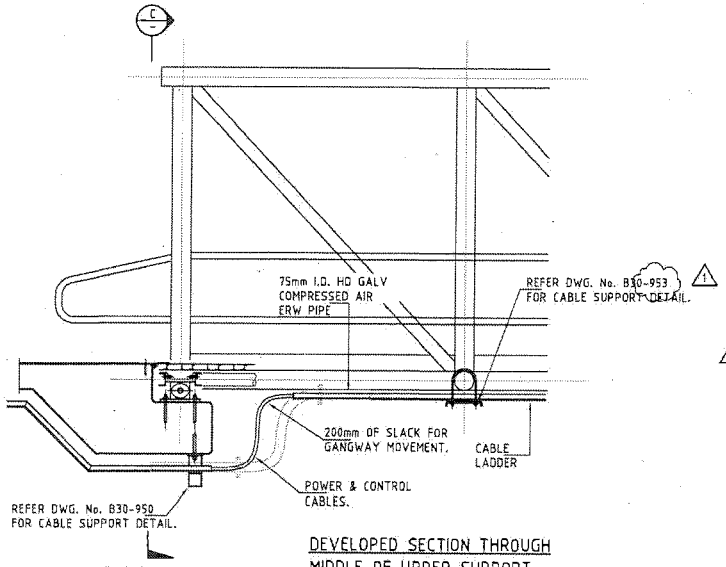

DEVELOPED SECTION THROUGH MIDDLE OF UPPER SUPPORT

GANGWAY TO SHELTER SERVICES CONNECTION
1:20

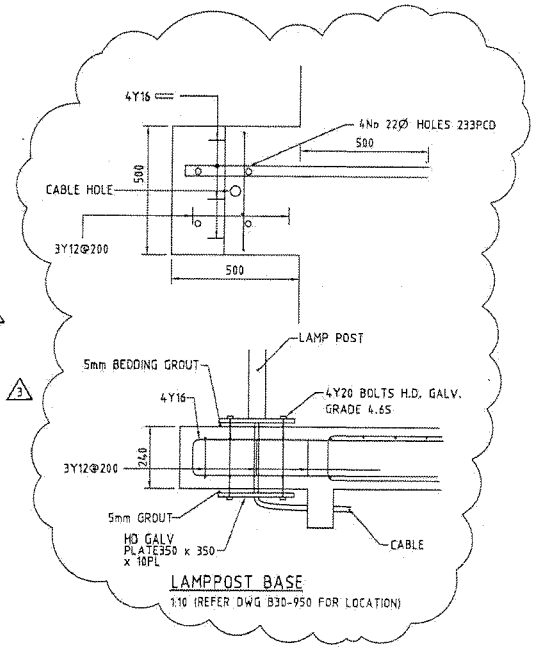

LAMPPOST BASE
1:10 (REFER DWG B30-950 FOR LOCATION)

REV.	DATE	DESCRIPTION	P.D.
4	7/96	DIMENSION ADDED	
3	2/5/96	GENERAL REVISIONS	D.L.
2	25/3/96	ISSUED FOR CONSTRUCTION	D.L.
1	15/12/95	GENERAL REVISION AS CLOUDED	D.L.
0	1/11/95	TENDER ISSUE	D.L.

1:20 400 0 400 800 1200 1600mm

QUALITY RECORD	NAME	SIGNATURE	DATE
DRAFTER	D.M.		
DESIGNER CHECK			
PROJECT DIRECTOR APPROVAL			

MAUNSELL PROPRIETARY LIMITED
Planners & Environmental Scientists.
A.C.N. 004 848 024

CLIENT: Brisbane City — Brisbane Transport

PROJECT TITLE: BRISBANE FERRY TERMINALS
DRG TITLE: SERVICES CONNECTION DETAILS

DATE OF ISSUE: JULY 96
SIZE: A1
CAD REFERENCE: J:\23795\DESIGN\B30-963.DWG
DRG. No.: B30-963
REV.: 4
DRG. STATUS: FOR CONSTRUCTION

BCC 132.0058

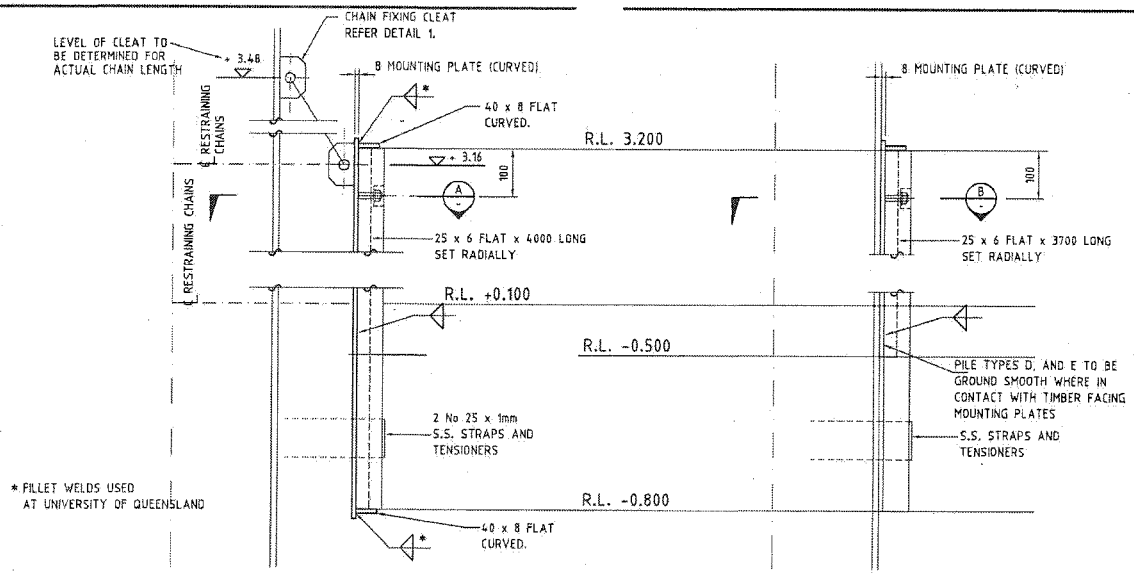

SECTION A
SCALE 1:5

SECTION B
SCALE 1:5

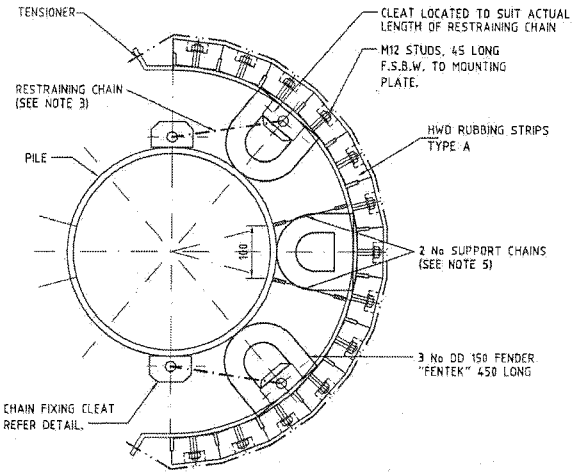

SECTION A
SCALE 1:5

FENDER FACING PANEL FOR 180° SEGMENT FOR PILE TYPE D
TYPE C SIMILAR BUT FOR 135° SEGMENT

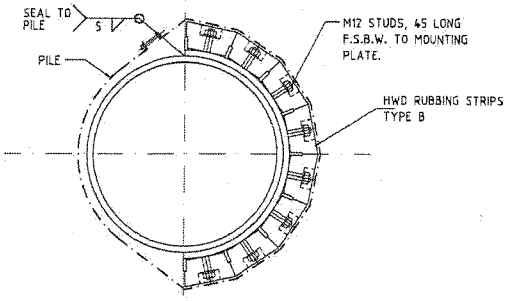

SECTION B
SCALE 1:5

FENDER FACING PANEL FOR 180° SEGMENT FOR PILE TYPE E1
TYPE E2, E3 SIMILAR BUT FOR 225° SEGMENT

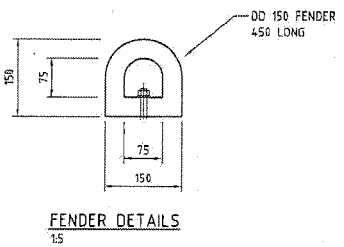

FENDER DETAILS
1:5

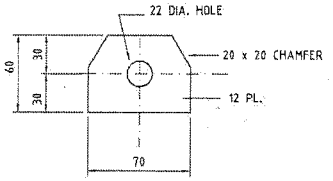

DETAIL 1 CHAIN FIXING CLEAT
SCALE 1:2

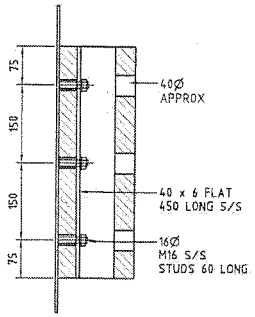

⚠ ELEVATION A
1:5

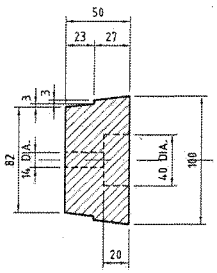

EX. 100 x 50 x 4000 HWD
HWD. RUBBING STRIP
TYPE A SCALE 1:2

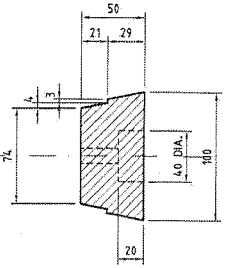

EX. 100 x 50 x 4000 HWD
HWD. RUBBING STRIP
TYPE B SCALE 1:2

NOTES

1. READ IN CONJUNCTION WITH DWG. B30-955.
2. ALL WELDS SHALL BE FULL PENETRATION BUTT WELDS UNLESS NOTED OTHERWISE
3. RESTRAINING CHAINS TO CONSIST OF 2 No 3.2t SWL ALLOY SHACKLES (SCREW PIN DEE) CHAIN WITH ONE LINK OF 20mm PROOF COIL CHAIN (MEDIUM LINKS) ALL HD GALV (NOMINAL LENGTH 194mm)
4. STUDS TO BE TAPED AND SEALED DURING PAINTING AND TOUCHED UP WITH PAINT AFTER BOLTS TIGHTENED.
5. SUPPORT CHAINS TO CONSIST OF 2 No 3.2t SWL ALLOY SHACKLES (SCREW PIN DEE) CHAIN WITH THREE LINKS OF 20mm PROOF COIL CHAIN (MEDIUM LINKS) ALL HD GALV (NOMINAL LENGTH 340mm)

FOR INFORMATION ONLY

FENDER/FACING PANEL FOR 180° SEGMENT FOR PILE
TYPE C SIMILAR BUT FOR 135° SEGMENT.

REV.	DATE	DESCRIPTION	P.D.
5	5/6/96	FENDER DETAILS AMENDED	D.L.
4	2/5/96	GENERAL REVISIONS	D.L.
3	28/3/96	NOTE ADDED	D.L.
2	25/3/96	REDESIGN/REDRAW FOR CONSTRUCTION	D.L.

SCALE 50 0 100 200mm
1 : 5 FULL SIZE A1

SCALE 20 0 20 40 60 80 100mm
1 : 2 FULL SIZE A1

QUALITY RECORD	NAME	SIGNATURE	DATE
DRAFTER	G.P.		
DESIGNER CHECK	I.R.		
PROJECT DIRECTOR APPROVAL			

MAUNSELL PROPRIETARY LIMITED
Planners & Environmental Scientists
A.C.N. 004 868 024

CLIENT: Brisbane Transport, Brisbane City

PROJECT TITLE: BRISBANE FERRY TERMINALS
DRG. TITLE: PILE AND FENDER DETAILS SHEET 2
DATE OF ISSUE: 5/6/96
SIZE: A1
CAD REFERENCE: J:\23795\DESIGN\B30-964.DWG
DRG. No.: B30-964
REV.: 5
DRG. STATUS: FOR CONSTRUCTION

BCC.133.0059

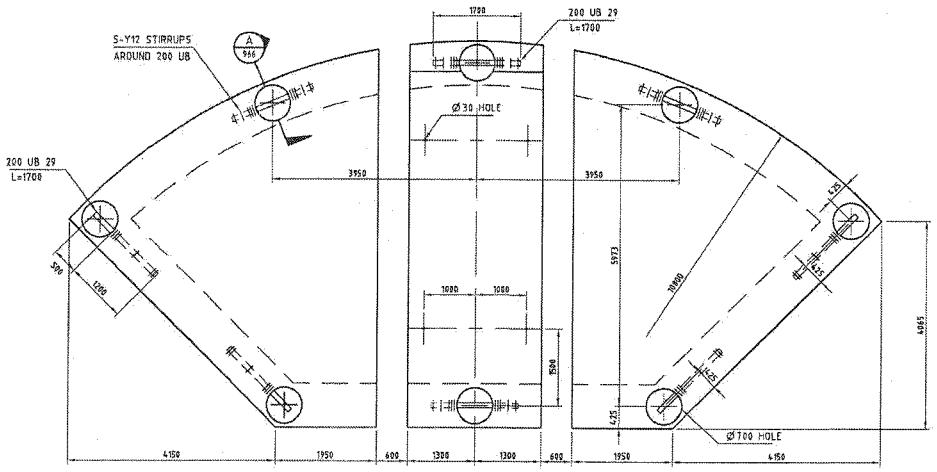

SHELTER SUSPENDED SLAB LAYOUT
SCALE 1:50

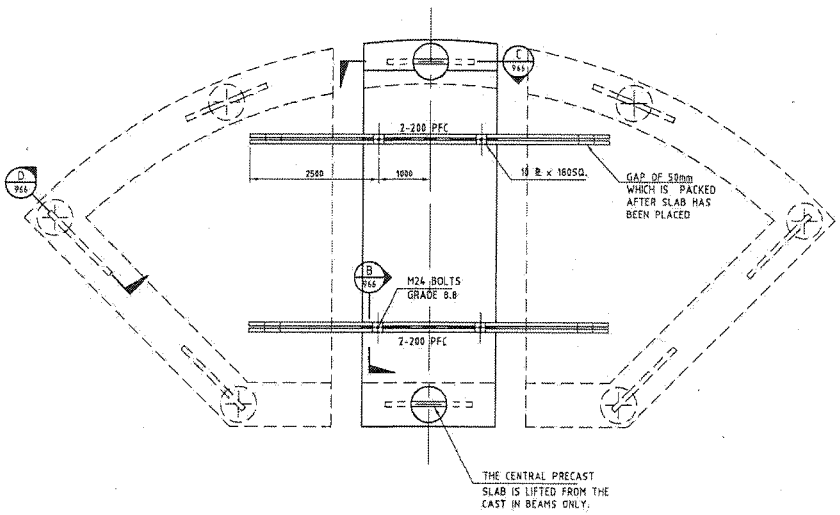

OUT OF BALANCE STRONG BACKS
SCALE 1:50

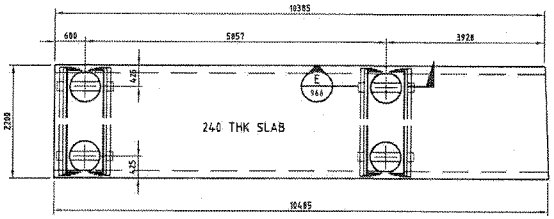

ACCESS RAMP - QUEENSLAND UNIVERSITY
SCALE 1:50

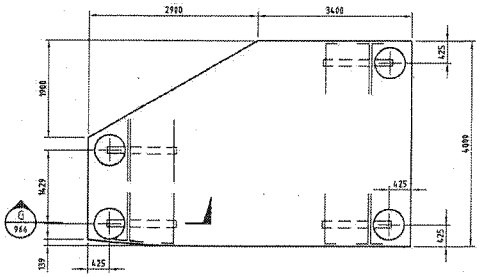

COMPRESSOR SLAB - GUYATT PART
SCALE 1:50

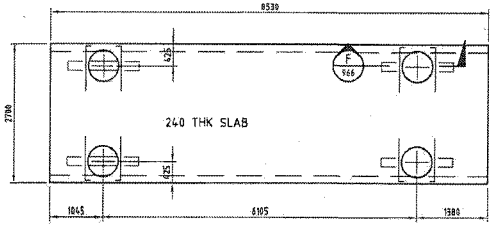

ACCESS RAMP - GUYATT PART
SCALE 1:50

FOR INFORMATION ONLY

REV.	DATE	DESCRIPTION	P.D.
1	2/5/96	GENERAL REVISIONS	D.L.
0	12/4/96	ISSUED FOR CONSTRUCTION	D.L.

SCALE 500 0 1000 2000mm
1 : 50 FULL SIZE A1

QUALITY RECORD	NAME	SIGNATURE	DATE
DRAFTER	GP		
DESIGNER CHECK	I.P.C.R.		
PROJECT DIRECTOR APPROVAL			

MAUNSELL PROPRIETARY LIMITED
Planners & Environmental Scientists.
A.C.N. 004 848 824

CLIENT.
Brisbane City
Brisbane Transport

PROJECT TITLE: BRISBANE FERRY TERMINALS
DRG. TITLE: PRECAST CONCRETE SLAB PLANS
DATE OF ISSUE: 2/5/96
SIZE: A1
CAD REFERENCE: J:\23795\B30-965.DWG
DRG. No.: B30-965
REV.: 1
DRG. STATUS: FOR CONSTRUCTION

BCC.139.0060

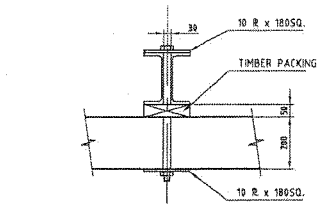

SECTION B SCALE 1:10 (965)

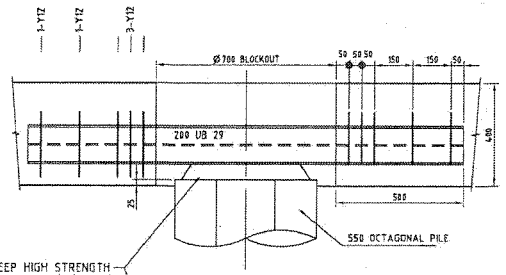

SECTION C SCALE 1:10 (965)

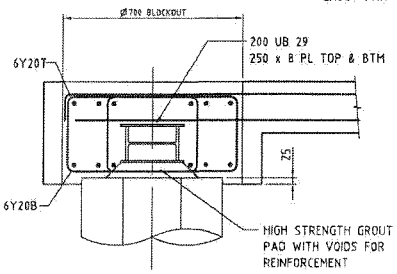

SECTION A SCALE 1:10 (965)

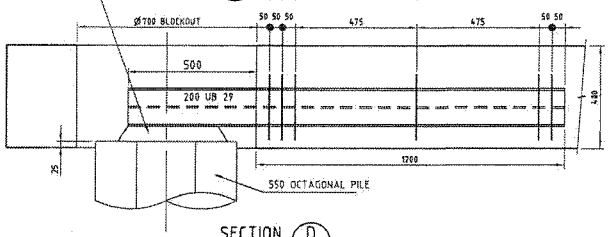

SECTION D SCALE 1:10 (965)

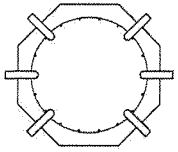

SECTION A SCALE 1:10 (-)

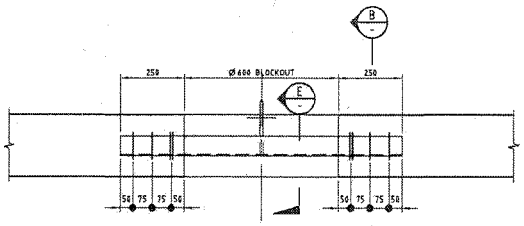

SECTION E SCALE 1:10 (965)

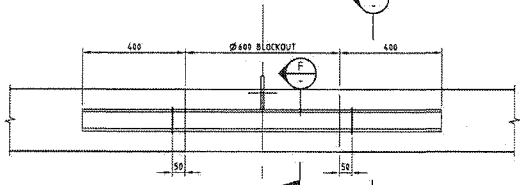

SECTION F SCALE 1:10 (965)

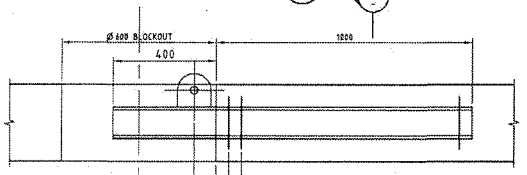

SECTION G SCALE 1:10 (965)

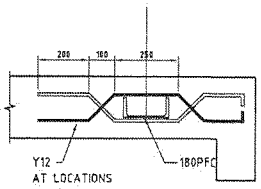

SECTION B SCALE 1:10 (-)

SECTION E SCALE 1:10 (-)

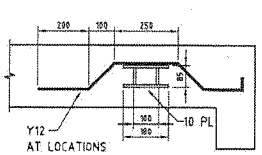

SECTION C SCALE 1:10 (-)

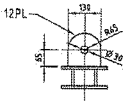

SECTION F SCALE 1:10 (-)

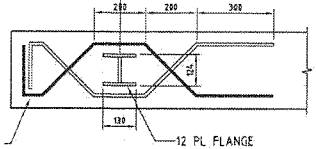

SECTION D SCALE 1:10 (-)

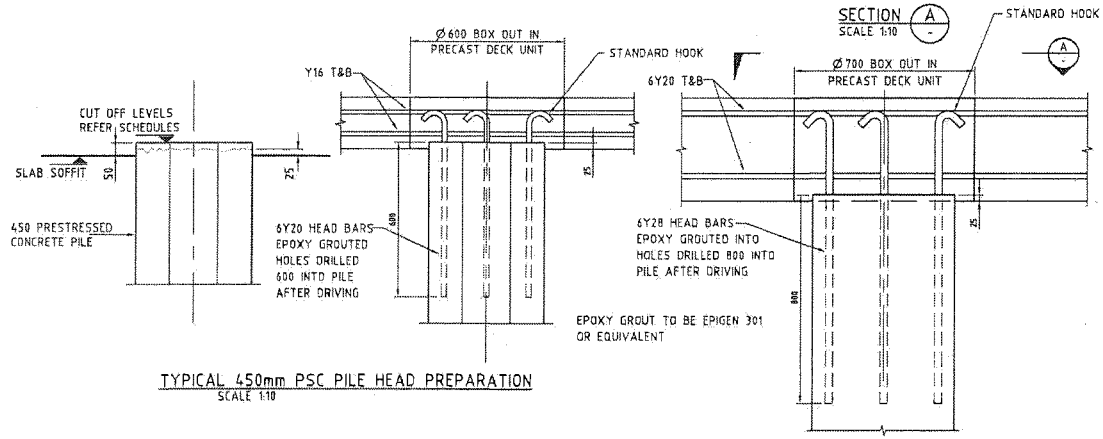

TYPICAL 450mm PSC PILE HEAD PREPARATION
SCALE 1:10

TYPICAL 550mm PSC PILE HEAD PREPARATION
SCALE 1:10

FOR INFORMATION ONLY

REV.	DATE	DESCRIPTION	P.D.
1	3/5/96	GENERAL REVISIONS	D.L.
0	12/4/96	ISSUED FOR CONSTRUCTION	D.L.

SCALE 100 0 100 200 300 400 500mm
1 : 10 FULL SIZE A1

QUALITY RECORD	NAME	SIGNATURE	DATE
DRAFTER	GP		
DESIGNER CHECK	I.P.C.R.		
PROJECT DIRECTOR APPROVAL			

MAUNSELL PROPRIETARY LIMITED
Planners & Environmental Scientists
A.C.N. 004 848 024

CLIENT: Brisbane City / Brisbane Transport

PROJECT TITLE: BRISBANE FERRY TERMINALS
DRG. TITLE: PRECAST CONCRETE SLAB DETAILS
DATE OF ISSUE: 3/5/96
SIZE: A1
CAD REFERENCE: J:\23795\DESIGN\B30-966.DWG
DRG. No.: B30-966
REV.: 1
DRG. STATUS: FOR CONSTRUCTION

47

BCC.133.0061

BRISBANE CITY COUNCIL
BRISBANE FERRY TERMINALS

CONSTRUCTION OF FOUR (4) FERRY TERMINALS

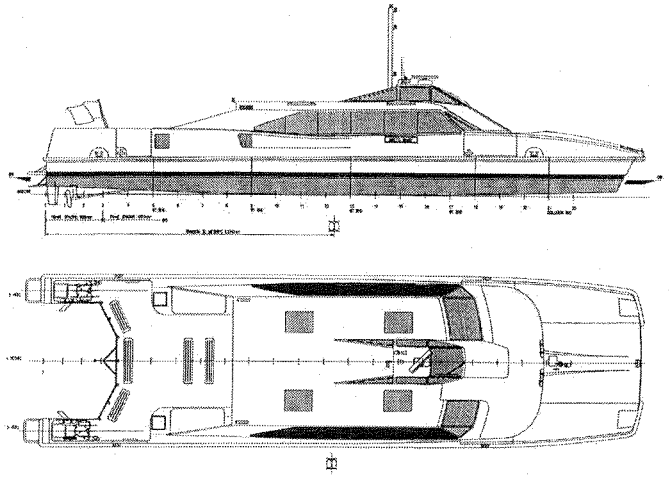

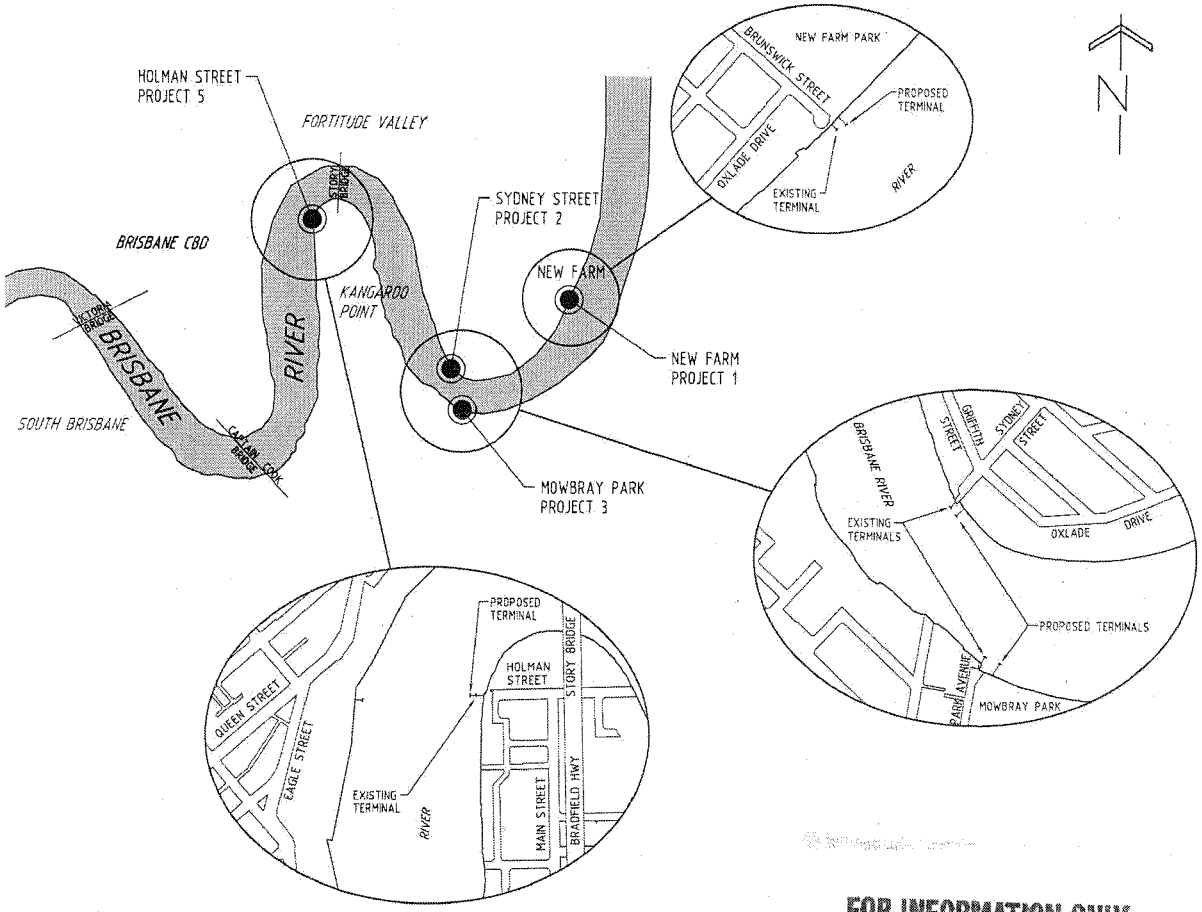

FOR INFORMATION ONLY

No.	BY	DATE	DESCRIPTION	APPD
C	JLP	07.03.01	ISSUED FOR CONSTRUCTION	
B	PJC	1.12.00	TENDER - GENERAL REVISIONS	
A	PJC	31.10.00	FOR CONSTRUCTION	

Scales

© COPYRIGHT THIS DRAWING AND DESIGN REMAINS THE PROPERTY OF MAUNSELL MCINTYRE PTY LTD AND MAY NOT BE COPIED WITHOUT PRIOR WRITTEN APPROVAL FROM THIS COMPANY

THE SIGNING OF THIS TITLE BLOCK CONFIRMS THE DESIGN AND DRAFTING OF THIS PROJECT HAVE BEEN PREPARED AND CHECKED IN ACCORDANCE WITH THE MAUNSELL MCINTYRE QUALITY ASSURANCE SYSTEM CERTIFIED TO AS/NZS ISO 9001-1994

DESIGNED	MCC	CHECKED	DDL
DRAWN	PJC	CHECKED	DDL
APPROVED	DDL	DATE	7.12.00

Cad ref: W:\Short Term\10307100\10307100_CAD\stage_2\general\G-001.dwg
Last modified: 20 Jan 11 - 13:15

Project Title: BRISBANE FERRY TERMINALS – CONTRACT No. K57/99/2001

Drawing Title: GENERAL LOCALITY PLAN

Status: FOR CONSTRUCTION | Drg No.: G-001 | Rev: C

BCC.133.0062

1-ASH-04 "

48

GENERAL

DRG No.	DRAWING TITLE
G-001	LOCALITY PLAN
G-002	DRAWING LIST
G-003	GENERAL NOTES - SHEET 1 OF 2
G-004	GENERAL NOTES - SHEET 2 OF 2

NEW FARM - PROJECT 1

DRG No.	DRAWING TITLE
PE1-001	GENERAL ARRANGEMENT
PA1-001	PATHWAY
PE1-002	PILING SCHEDULE AND SETOUT
PE1-003	LINK SLAB AND PATHWAY
PE1-004	SERVICES GENERAL ARRANGEMENT
PE1-005	LIGHTING AND POWER LAYOUT
PE1-006	SURVEY PLAN

SYDNEY STREET - PROJECT 2

DRG No.	DRAWING TITLE
PE2-001	GENERAL ARRANGEMENT
PA2-001	PATHWAY
PE2-002	PILING SCHEDULE AND SETOUT
PE2-003	LINK SLAB AND PATHWAY
PE2-004	SERVICES GENERAL ARRANGEMENT
PE2-005	LIGHTING AND POWER LAYOUT
PE2-006	SURVEY PLAN

MOWBRAY PARK - PROJECT 3

DRG No.	DRAWING TITLE
PE3-001	GENERAL ARRANGEMENT
PA3-008	PATHWAY PLAN
PE3-002	PILING SCHEDULE AND SETOUT
PE3-003	LINK SLAB AND PATHWAY - SHEET 1 OF 2
PE3-004	LINK SLAB AND PATHWAY - SHEET 2 OF 2
PE3-005	SERVICES GENERAL ARRANGEMENT
PE3-006	LIGHTING AND POWER LAYOUT
PE3-007	SHELTER LAYOUT
PE3-008	SHELTER DETAILS - SHEET 1 OF 2
PE3-009	SHELTER DETAILS - SHEET 2 OF 2
PE3-010	ROOF LAYOUT AND ELEVATIONS
PE3-011	ROOF CONNECTION DETAILS
PE3-012	SURVEY PLAN
PA3-001	WAITING AREA - PLAN AND SECTION
PA3-002	WAITING AREA - ELEVATIONS
PA3-003	WAITING AREA - ROOF PLAN AND REFLECTED CEILING PLAN
PA3-004	WAITING AREA - DETAIL SECTION
PA3-005	WAITING AREA - ROOF DETAILS
PA3-006	-
PA3-007	WAITING AREA - SEAT DETAILS
PA3-009	ENTRY STRUCTURE AND SECURITY GATE

HOLMAN STREET - PROJECT 5

DRG No.	DRAWING TITLE
PE5-001	GENERAL ARRANGEMENT
PE5-002	PILING SCHEDULE AND SETOUT
PE5-003	LINK SLAB - SHEET 1 OF 2
PE5-004	LINK SLAB - SHEET 2 OF 2
PE5-005	SERVICES GENERAL ARRANGEMENT
PE5-006	LIGHTING AND POWER LAYOUT
PE5-008	SURVEY PLAN

NORMAN PARK - PART OF PROJECT 5

DRG No.	DRAWING TITLE
PE5-007	TEMPORARY SULLAGE CONNECTION

STANDARD DRAWINGS

DRG No.	DRAWING TITLE
GA-001	WAITING AREA - PLAN AND SECTIONS
GA-002	WAITING AREA - ELEVATIONS
GA-003	WAITING AREA - ROOF PLAN AND REFLECTED CEILING PLAN
GA-004	WAITING AREA - SECTION
GA-005	WAITING AREA - ROOF DETAILS
GA-006	WAITING AREA - SEATING DETAILS
GA-007	-
GA-008	-
GA-009	-
GA-010	WAITING AREA - BALUSTRADE DETAILS TYPE 1
GA-011	WAITING AREA - BALUSTRADE DETAILS TYPE 2
GA-012	WAITING AREA - BALUSTRADE DETAILS TYPE 3
GA-013	WAITING AREA - GANGWAY ROOF PLAN & ELEVATION
GA-014	WAITING AREA - GANGWAY DETAIL SECTIONS
GA-015	WAITING AREA - PONTOON PLAN & ELEVATIONS
GA-016	WAITING AREA - PONTOON BALUSTRADE DETAILS
GA-017	WAITING AREA - LINK BRIDGES BALUSTRADE SETOUTS
GA-018	WAITING AREA - LINK BRIDGES BALUSTRADE SETOUTS
GA-019	WAITING AREA - LINK BRIDGES BALUSTRADE SETOUTS
GA-020	WAITING AREA - BALUSTRADE TYPE 4
GA-021	WAITING AREA - SLIDING DOOR ELEVATION SECTION & DETAILS
GA-022	GANGWAY - AUTOMATIC GATES
GE-001	SHELTER LAYOUT
GE-002	SHELTER DETAILS - SHEET 1 OF 2
GE-003	SHELTER DETAILS - SHEET 1 OF 2
GE-004	ROOF LAYOUT AND ELEVATIONS
GE-005	ROOF CONNECTION DETAILS
GE-006	GANGWAY FRAMING LAYOUT
GE-007	GANGWAY FRAMING DETAILS - SHEET 1 OF 2
GE-008	GANGWAY FRAMING DETAILS - SHEET 1 OF 2
GE-009	PILE AND FENDER DETAILS - SHEET 1 OF 2
GE-010	PILE AND FENDER DETAILS - SHEET 2 OF 2
GE-011	PONTOON - SHEET 1 OF 3
GE-012	PONTOON - SHEET 2 OF 3
GE-013	PONTOON - SHEET 3 OF 3
GE-014	PONTOON FRAMING LAYOUT
GE-015	PONTOON FRAMING DETAILS
GE-016	DISTRIBUTION BOARD TYPICAL SINGLE LINE DIAGRAM
GE-017	TYPICAL ELECTRICAL AND COMMUNICATIONS SERVICE INSTALLATION
GE-018	FUTURE INSTALLATION OF EQUIPMENT TYPICAL BLOCK DIAGRAM
GE-019	TYPICAL ELECTRICAL AND COMMUNICATIONS CABINET GENERAL ARRANGEMENT
GE-021	TYPICAL ELECTRICAL AND COMMUNICATION TRENCH

FOR INFORMATION ONLY

No.	BY	DATE	DESCRIPTION	APPD
C	JLP	07.03.01	ISSUED FOR CONSTRUCTION	
B	PJC	1.12.00	TENDER - GENERAL REVISIONS	
A	PJC	31.10.00	FOR CONSTRUCTION	

Scales

BRISBANE CITY

Abigroup

Maunsell McIntyre

COX RAYNER

© COPYRIGHT THIS DRAWING AND DESIGN REMAINS THE PROPERTY OF MAUNSELL MCINTYRE PTY LTD AND MAY NOT BE COPIED WITHOUT PRIOR WRITTEN APPROVAL FROM THIS COMPANY

THE SIGNING OF THIS TITLE BLOCK CONFIRMS THE DESIGN AND DRAFTING OF THIS PROJECT HAVE BEEN PREPARED AND CHECKED IN ACCORDANCE WITH THE MAUNSELL MCINTYRE QUALITY ASSURANCE SYSTEM CERTIFIED TO AS/NZS ISO 9001-1994

DESIGNED	MCC	CHECKED	DDL
DRAWN	PJC	CHECKED	DDL
APPROVED	DDL	DATE	7.12.00

Cad ref: W:\ShortTerm\10307100\10307100_CAD\stage_2\general\G-002.dwg
Last modified: 20 Jan 11 - 11:15

Project Title: BRISBANE FERRY TERMINALS – CONTRACT No. K57/99/2001

Drawing Title: GENERAL DRAWING LIST

Status: FOR CONSTRUCTION

Drg No.: G-002

Rev: C

BCC.133.0063

GENERAL

G1 THESE DRAWINGS SHALL BE READ IN CONJUNCTION WITH THE SPECIFICATION, DOCUMENTATION FROM OTHER CONSULTANTS AND WITH SUCH OTHER WRITTEN INSTRUCTIONS AS MAY BE ISSUED DURING THE COURSE OF THE CONTRACT. ALL DISCREPANCIES SHALL BE REFERRED TO THE SUPERINTENDENT'S REPRESENTATIVE FOR DECISION BEFORE PROCEEDING WITH THE WORK.

G2 ALL DIMENSIONS RELEVANT TO THE SETTING OUT AND OFF-SITE WORK SHALL BE VERIFIED BY THE CONTRACTOR BEFORE CONSTRUCTION AND FABRICATION IS COMMENCED. DRAWINGS SHALL NOT BE SCALED.

G3 DURING CONSTRUCTION THE CONTRACTOR SHALL BE RESPONSIBLE FOR MAINTAINING THE WORKS IN A STABLE CONDITION AND ENSURING NO PART SHALL BE OVERSTRESSED UNDER CONSTRUCTION ACTIVITIES. TEMPORARY BRACING OR PROPPING SHALL BE PROVIDED BY THE CONTRACTOR AS REQUIRED AND TO THE APPROVAL OF THE SUPERINTENDENT'S REPRESENTATIVE.

G4 WORKMANSHIP AND MATERIALS SHALL BE IN ACCORDANCE WITH THE RELEVANT CURRENT S.A.A. CODES, OTHER CODES REFERENCED THEREIN INCLUDING ALL AMENDMENTS. THE LOCAL STATUTORY AUTHORITIES, AND GENERALLY ACCEPTED STANDARDS OF GOOD BUILDING PRACTICE SHALL BE FOLLOWED EXCEPT WHERE VARIED BY THE CONTRACT DOCUMENTS.

G5 ALL DIMENSIONS ARE IN MILLIMETRES UNLESS STATED OTHERWISE. ALL LEVELS, METRAGES, CHAINAGES AND CO-ORDINATES ARE EXPRESSED IN METRES.

G6 NORTHING AND EASTING CO-ORDINATES ARE TO AMG AND THE LEVEL DATUM REFERRED TO IN THESE DRAWINGS IS THE AUSTRALIAN HEIGHT DATUM (A.H.D.) .

G7 BENCH MARKS (B.M.) TO BE USED FOR THIS CONTRACT ARE SHOWN ON THE GENERAL ARRANGEMENT DRAWING FOR EACH FERRY TERMINAL.

G8 EXISTING SERVICES SHOWN ON PLANS ARE NOT NECESSARILY COMPLETE NOR ARE THEIR LOCATION WITH REGARDS TO LOCATION AND DEPTH PRECISE.

G9 PROPRIETARY ITEMS SHALL BE INSTALLED IN ACCORDANCE WITH THE MANUFACTURERS SPECIFICATIONS.

FOUNDATIONS

F1 FOUNDING LEVELS ARE SUBJECT TO FINAL CONFIRMATION AFTER INSPECTION BY THE SUPERINTENDENT'S REPRESENTATIVE. BLINDING OR STRUCTURAL CONCRETE FOR STRUCTURAL ELEMENTS SHALL NOT BE PLACED UNTIL WRITTEN APPROVAL FROM THE SUPERINTENDENT'S REPRESENTATIVE HAS BEEN OBTAINED.

F2 MAINTAIN ALL EXCAVATION CLEAN AND FREE OF WATER.

F3 FOUNDING LEVELS TO HAVE MINIMUM SAFE BEARING PAD AND STRIP FOOTING PRESSURE CAPACITY OF 150KPA.

EARTHWORKS

E1 STRIP SITE TO MIN. 150MM UNDER AREAS FOR NEW PAVEMENTS, BUILDINGS AND SELECT FILL. DO NOT REUSE UNDER PAVEMENTS AND BUILDINGS.

E2 SELECT FILL TO BE A GRAVEL OR DECOMPOSED/BROKEN ROCK, FREE FROM CLAY, ORGANIC AND OTHER DELETERIOUS MATERIAL AND CONFORMING TO THE FOLLOWING:

A.S. SIEVE	% PASSING (WT)
75mm	100
9.5mm	30-100
2.36mm	15-65
0.075mm	5-25

RATIO OF "% PASSING 0.075mm" TO "% PASSING 2.36mm" TO LIE BETWEEN 0.2 AND 0.4 LINEAR SHRINKAGE 2% TO 8% COMPACT TO 95% MODIFIED MAXIMUM DRY DENSITY IN LAYERS NOT EXCEEDING 200mm THICK.

ALL WORKMANSHIP AND MATERIALS SHALL CONFORM TO AS3700 AND OTHER CODES REFERENCED THEREIN.

AQUADECK

A1 TYPE 1 - TO BE ACL COMCORK AQUADECK FLOOR COVERING AD1020 DIAMOND PROFILE TEAK COLOR

A2 TYPE 2 - TO BE ACL COMCORK AQUADECK FLOOR COVERING AD1020 DIAMOND PROFILE YELLOW & BLACK COLOR

CONCRETE

C1 ALL WORKMANSHIP AND MATERIALS SHALL BE IN ACCORDANCE WITH AS3600 EXCEPT WHERE VARIED BY CONTRACT DOCUMENTS.

C2 CONCRETE COMPONENTS AND QUALITY SHALL BE AS FOLLOWS UNLESS NOTED OTHERWISE.

C3 MINIMUM CLEAR CONCRETE COVER TO REINFORCEMENT SHALL BE AS FOLLOWS UNLESS NOTED OTHERWISE.
GENERALLY - 50mm.
CONCRETE SURFACES ABOVE GROUND INTERIOR ENVIRONMENTS - 35mm
QUICKCELL PRECAST PLANKS - 40mm

C4 ALL CONCRETE SHALL BE PROPERLY CURED BY KEEPING ALL EXPOSED SURFACES IN A MOIST OR DAMP CONDITION FOR AT LEAST THE FIRST SEVEN DAYS AFTER PLACING U.N.O. FOR ALTERNATIVE CURING METHODS, REFER SPECIFICATION. ANY CURING AGENTS SHALL BE COMPATIBLE WITH SURFACE FINISHES.

C5 NO HOLES, CHASES OR EMBEDMENT OF PIPES OTHER THAN THOSE SHOWN ON THE STRUCTURAL DRAWINGS SHALL BE MADE IN CONCRETED MEMBERS WITHOUT PRIOR APPROVAL FROM THE SUPERINTENDENT'S REPRESENTATIVE.

C6 CONSTRUCTION JOINTS SHALL BE PROPERLY FORMED EITHER HORIZONTALLY OR VERTICALLY, THOROUGHLY SCABBLED TO REMOVE LAITANCE AND POORLY COMPACTED MATERIAL, AND USED ONLY WHERE SHOWN OR SPECIFICALLY APPROVED BY THE SUPERINTENDENT'S REPRESENTATIVE.

PROPERTY	BLINDING	PILING INFILL	QUICKCELL PRECAST	FOOTPATH ON GROUND RET. WALL FTG	ALL OTHER STRUCTURAL CONCRETE
CONCRETE CLASS	N15	N45	N50	N32	N50
CEMENT TYPE	GP	GP	GP	GP	GP
MAX. AGGREGATE SIZE (MM)	20	20	10	20	20
MAX. DRYING SHRINKAGE AT 56 DAYS TO AS1012.13 (MICROSTRAINS)	-	-	-	-	700
CHARACTERISTIC STRENGTH AT 28 DAYS (MPA)	15	50	15	32	50
SLUMP RANGE (MM)	TO SUIT MIX DESIGN	TO SUIT MIX DESIGN	TO SUIT MIX DESIGN	80±15	80±15
PROJECT ASSESSMENT REQUIRED	NO	YES	YES	YES	YES

C7 REINFORCEMENT SYMBOLS:

Y HOT ROLLED DEFORMED BAR TO AS1302 GRADE 400
R STRUCTURAL GRADE PLAIN ROUND BAR TO AS1302
F HARD DRAWN STEEL WIRE REINFORCING FABRIC TO AS1304
W HARD DRAWN STEEL WIRE REINFORCING WIRE TO AS1303

THE NUMBER FOLLOWING THE BAR SYMBOL IS THE NORMAL BAR DIAMETER IN MILLIMETRES.

C8 REINFORCEMENT POSITION SYMBOLS:

T	TOP FACE	FF	FAR FACE
NF	NEAR FACE	EW	EACH WAY
B	BOTTOM FACE	EF	EACH FACE

C9 REINFORCEMENT IS REPRESENTED DIAGRAMMATICALLY AND IS NOT NECESSARILY SHOWN IN TRUE PROJECTION.

C10 WELDING OF REINFORCEMENT SHALL NOT BE PERMITTED WITHOUT THE PRIOR APPROVAL OF THE SUPERINTENDENT'S REPRESENTATIVE.

C11 ALL REINFORCEMENT SHALL BE FIRMLY SUPPORTED ON PLASTIC OR CLASS N50 CONCRETE OR APPROVED METAL CHAIRS AT NOT GREATER THAN 900 CENTRES BOTH WAYS. BARS SHALL BE TIED AT ALTERNATE INTERSECTIONS.

C12 SPLICES IN REINFORCEMENT SHALL BE MADE ONLY IN THE POSITIONS SHOWN OR AS OTHERWISE APPROVED IN WRITING BY THE SUPERINTENDENT'S REPRESENTATIVE WHERE NOT SPECIFICALLY DESIGNATED. LAP SPLICES SHALL BE AS FOLLOWS:

REINFORCEMENT TYPE	GRADE/DIA.	MINIMUM LENGTH LAP
PLAIN BARS	250 R	40 BARS DIAMETERS
FABRIC	450 F	2 TRANSVERSE BARS PLUS 25mm
DEFORMED BARS	400/Y12 400/Y16 400/Y20 400/Y24	300mm 400mm 500mm 600mm

C13 FORMWORK SHALL BE DESIGNED AND CONSTRUCTED IN ACCORDANCE WITH AS3610.

C14 FORMWORK TO BE CLASS 2 FOR EXPOSED SURFACES OTHERWISE CLASS 3 FOR HIDDEN VERTICAL FACES AND CLASS 4 FOR SOFFITS.

C15 ALL FORMED EXPOSED AND RE-ENTRANT CORNERS SHALL BE CHAMFERED OR FILLETED 25mm U.N.O.

C16 MINIMUM STRIPPING TIMES USING GENERAL PURPOSE PORTLAND CEMENT TYPE GP SHALL BE AS FOLLOWS:

SURFACE ORIENTATION AND TYPE		MINIMUM STRIPPING TIME FOR AVERAGE AIR TEMPERATURE CURING PERIOD		
		1 DAY	2 DAYS	3 DAYS
HORIZONTAL (BEAM AND SLAB SOFFITS)	FORMS	4 DAYS	6 DAYS	8 DAYS
	SUPPORTING MEMBERS	12 DAYS	18 DAYS	24 DAYS

THIS TABLE IS BASED ON COMPLIANCE WITH THE CONDITIONS SPECIFIED IN CLAUSES 5.4.3.2 A, B, AND C OF AS3610. CLAUSE 5.4.3.2B OF AS3610 SHALL ALSO APPLY TO SPECIAL - CLASS CONCRETE. IF THESE CONDITIONS CANNOT BE ACCOMMODATED, THE CASE SHALL BE REFERRED TO THE SUPERINTENDENT'S REPRESENTATIVE.

C17 MEMBER SIZES ARE THE MINIMUM TO BE ACHIEVED AND EXCLUDE APPLIED FINISHES.

C18 ALL FOOTPATHS TO BE REINFORCED WITH A SINGLE LAYER OF F72 FABRIC U.N.O.

FOR INFORMATION ONLY

© COPYRIGHT THIS DRAWING AND DESIGN REMAINS THE PROPERTY OF MAUNSELL MCINTYRE PTY LTD AND MAY NOT BE COPIED WITHOUT PRIOR WRITTEN APPROVAL FROM THIS COMPANY

No.	BY	DATE	DESCRIPTION	APPD
C	JLP	07.03.01	ISSUED FOR CONSTRUCTION	
B	PJC	1.12.00	TENDER - GENERAL REVISIONS	
A	PJC	31.10.00	FOR CONSTRUCTION	

Scales

BRISBANE CITY

Abigroup

Maunsell McIntyre

COX RAYNER

THE SIGNING OF THIS TITLE BLOCK CONFIRMS THE DESIGN AND DRAFTING OF THIS PROJECT HAVE BEEN PREPARED AND CHECKED IN ACCORDANCE WITH THE MAUNSELL MCINTYRE QUALITY ASSURANCE SYSTEM CERTIFIED TO AS/NZS ISO 9001-1994

DESIGNED	MCC	CHECKED	DDL
DRAWN	PJC	CHECKED	DDL
APPROVED	DDL	DATE	7.12.00

Cad ref: M:\ShortTerm\10307101\10307108_CAD\stage_2\general\G-003.dwg
Last modified: 20 Jan 11 - 11:37

Project Title: BRISBANE FERRY TERMINALS - CONTRACT No. K57/99/2001

Drawing Title: GENERAL
GENERAL NOTES
SHEET 1 OF 2

Status: FOR CONSTRUCTION

Org No.: G-003

Rev: C

50

BCC.133.0064

GENERAL METALWORK NOTES

GM1 ALL HOLLOW SECTIONS TO HAVE CAP PLATES 6mm THICK, FULLY SEALED.

GM2 ALL BOLTS, NUTS AND WASHERS SHALL BE GRADE 316 STAINLESS STEEL UNLESS OTHERWISE NOTED.

GM3 ALL METALWORK SHALL BE NEATLY FINISHED WITH ALL SHARP EDGES GROUND SMOOTH.

GM4 ALL WELDS SHALL BE 6MM CONTINUOUS FILLET WELDS WHERE POSSIBLE OTHERWISE FULL PENETRATION BUTT WELDS, UNLESS OTHERWISE NOTED. ALL WELDED JOINTS MUST BE FULLY SEALED.

GM5 THERE SHALL BE NO DIRECT CONTACT BETWEEN DISSIMILAR METALS. SEPARATION SHALL BE PROVIDED BY AN APPROVED SYNTHETIC INSULATION.

GM6 ALL BASE PLATES, CLEATS, ETC. BEARING AGAINST CONCRETE SHALL BE SEATED ON A 3mm THICK NEOPRENE PAD, OF THE SAME PROFILE AS THE BEARING PLATE.

GM7 ALL COPPER PIPES SHALL BE WRAPPED IN "DENSO" TAPE PETROLATUM SYSTEM WHERE UNDERGROUND AND "DENSO" TAPE COVERCOAT SYSTEM WHERE EXPOSED.

ALUMINIUM NOTES

A1 ALL WORKMANSHIP AND MATERIALS SHALL COMPLY WITH AS1664.

A2 ALUMINIUM SECTIONS SHALL COMPLY WITH AS1734, AS1866 OR AS1867.

A3 ALL WELDING SHALL COMPLY WITH AS1665.

A4 ALL WELDING SHALL BE CARRIED OUT USING ARGON GAS SHIELDING.

A5 ALUMINIUM EXTRUSIONS SHALL BE ALLOY 6061T6.

A6 PLATE IS TO BE ALLOY 5083 H321.

A7 TREAD PLATE IS TO BE ALLOY 5251 H34.

A8 BOLTS SHALL BE INSULATED FROM ALUMINIUM BY THE USE OF A 1mm NYLON SLEEVE ON THE BOLT SHANK AND 3mm THICK NYLON WASHERS UNDER BOLT HEAD AND NUT.

STEELWORK NOTES

S1 THE FABRICATION AND ERECTION OF ALL STEELWORK SHALL BE IN ACCORDANCE WITH THE SPECIFICATION AND AS4100.

S2 SHOP DRAWINGS SHALL BE SUBMITTED TO THE SUPERINTENDENT'S REPRESENTATIVE FOR REVIEW. (REFER SPECIFICATION FOR RESPONSIBILITIES). FABRICATION SHALL NOT COMMENCE UNTIL APPROVAL HAS BEEN GIVEN.

S3 THE FOLLOWING MATERIAL GRADES SHALL BE USED UNLESS NOTED OTHERWISE.

HOT ROLLED SECTIONS	GRADE 300 TO AS3679
PLATES	GRADE 300 TO AS3678
HOLLOW SECTIONS	GRADE 350 TO AS1163
COLD FORMED SECTIONS	GRADE G450-2430 TO AS1538 AND AS1397

S4 UNLESS NOTED OTHERWISE STEEL BOLTS TO BE CLASS 8.8/S AND TO BE HOT DIP GALVANISED.

S5 ALL WELDING ELECTRODES SHALL BE GRADE E48XX IN ACCORDANCE WITH AS1553 AND ALL WELDING SHALL BE IN ACCORDANCE WITH AS1554/1.

S6 ALL WELDS SHALL BE CATEGORY SP.

S7 ALL BUTT WELDS SHALL BE COMPLETE PENETRATION.

S8 ALL COMPLETE PENETRATION BUTT WELDS SHALL BE ULTRASONIC TESTED IN ACCORDANCE WITH AS2207. 15% OF FILLET WELDS SHALL BE MAGNETIC PARTICLE EXAMINED IN ACCORDANCE WITH AS1171.

S9 'LYSAGHT' Z OR C SECTIONS SHALL BE HOT DIP GALVANISED, U.N.O., MANUFACTURED FROM HOT DIP ZINC COATED STEEL COIL CONFORMING TO AS1397 IN THE FOLLOWING GRADES AND COATING CLASSES:

BMT	GRADE	COATING CLASS
1.0	G550	Z200
1.2	G550	Z200
1.5, 1.9	G450	Z200
2.4, 3.0	G450	Z200

S10 PROVIDE ALL CLEATS, BRACKETS, FIXING HOLES, ETC. REQUIRED BY THE SERVICES DRAWINGS.

S11 ALL STEELWORK SHALL BE PAINTED OR GALVANISED OR BOTH IN ACCORDANCE WITH THE SPECIFICATION.

S12 ALL STAINLESS STEEL "SS" SHALL BE GRADE 316L WELDING TO COMPLY TO AS1554 USING GRADE 316L ELECTRODES.

S13 CHEMSET ANCHORS SHALL BE 'RAMSET' STAINLESS STEEL ANCHORS, OR EQUIVALENT.

S14 ALL STAINLESS STEEL NUTS AND BOLTS SHALL BE WELDED TOGETHER AFTER TIGHTENING.

S15. ALL STEEL PILES TO RECEIVE A PROTECTIVE COATING AS SPECIFIED TO A LEVEL 2m BELOW RIVERBED.

DEMOLITION

DM1. ALL MATERIAL TO BE DEMOLISHED SHALL BE DISPOSED OFF SITE, (AND NOT IN THE RIVER), IN ACCORDANCE TO THE SUPERINTENDENT'S REPRESENTATIVE DIRECTIONS. THE PILES AND ANY PILES STUBS, MUST BE COMPLETELY REMOVED. WHERE IT IS NOT POSSIBLE TO FULLY EXTRACT ANY OF THE PILES, THE PILES AND PILE STUBS MUST BE CUT OFF AT A LEVEL:-
- > AT LEAST ONE (1) METRE BELOW THE BED LEVEL OF THE WATERWAY OR 600mm BELOW ANY EXPOSED LEVEL OF ROCK; OR
- > AT A GREATER DEPTH THAN DETAILED ABOVE, IF REQUIRED BY THE REGIONAL HARBOUR MASTER.

MASONRY

M1 ALL WORKMANSHIP AND MATERIALS SHALL BE IN ACCORDANCE WITH AS3700 EXCEPT WHERE VARIED BY CONTRACT.

M2 ALL BLOCKS TO GRADE 12 U.N.O. MORTAR TYPE TO BE C.L.S - 1:1:6.

M3 ALL BLOCKWORK CORES SHALL BE CONCRETE FILLED U.N.O. CONCRETE CLASS N20 10mm AGGREGATE.

M4 CLEANOUT BLOCKS SHALL BE USED FOR BOTTOM COURSE OF GROUTED BLOCKWORK WALLS.

M5 REFER STRUCTURAL STEEL NOTES FOR MASONARY ANCHORS.

DESIGN DATA

ENVIRONMENTAL LOADS

D1 WAVE LOADS
MAXIMUM WAVE HEIGHT 0.8M WITH A PERIOD OF 2 TO 4 SECONDS.

D2 CURRENT
MAXIMUM CURRENT FLOOD VELOCITY OF 3M/S PARALLEL TO QUAY LINE.

D3 WIND
FORCES CALCULATED IN ACCORDANCE WITH AS1170 PART 2.
BASIC WIND SPEED VP = 49M/S IN TERRAIN CATEGORY 2 IN ANY DIRECTION.

LIVE LOADS

D4 WAITING AREA SLAB: 5.0KPA DISTRIBUTED, 4.5KN CONCENTRATED

D5 PONTOON AND GANGWAY: UNIFORM DISTRIBUTED LOAD 3.0 KPA, CONCENTRATED LOAD 4.5 KN

VESSEL LOADS

D6 VESSELS
- CITY CAT DISPLACEMENT 26 TONS, 25M LOA, APPROACH VELOCITY = 0.3M/S
- CITYCAT ACCIDENTAL APPROACH VELOCITY = 3m/s AT 45° ANGLE TO BERTH
- CITY FERRIES (MONOHULL'S) DISPLACEMENT 12 TONS, 12M LOA APPROACH VELOCITY = 0.4M/S

D7 MOORING
22 DIAMETER POLYPROPYLENE ROPE 60KN BREAKING LOAD.

TIDAL RANGE

(TIDE LEVEL IN METRES.)

2.87 — HIGHEST ASTRONOMICAL TIDE (H.A.T.) (+1.72 AHD)

2.29 — MEAN HIGH WATER SPRINGS (M.H.W.S.) (+1.14 AHD)

1.87 — MEAN HIGH WATER NEAPS (M.H.W.N.) (+0.72 AHD)

1.34 — MEAN SEA LEVEL (M.S.L.)

RL 0.00 A.H.D. 1.24M ABOVE (L.A.T.)

0.79 — MEAN LOW WATER NEAPS (M.L.W.N.) (-0.36 AHD)

0.37 — MEAN LOW WATER SPRINGS (M.L.W.S.) (-0.78 AHD)

0.00 — PORT DATUM (-1.15 AHD) / LOWEST ASTRONOMICAL TIDE (L.A.T.)

FLOOD LEVELS

FLOOD (ARI YRS)	LOCATION (LEVELS IN METRES TO A.H.D.)				
	RIVERSIDE	MOWBRAY PARK	SYDNEY STREET	NEW FARM	HOLMAN STREET
25	2.0	1.7	1.7	1.6	2.0
100	3.8	3.2	3.1	2.7	3.7

FOR INFORMATION ONLY

No.	BY	DATE	DESCRIPTION	APPD
C	AJP	07.03.01	ISSUED FOR CONSTRUCTION	
B	PJC	7.12.00	TENDER - GENERAL REVISIONS	
A	PJC	31.10.00	FOR CONSTRUCTION	

Scales

BRISBANE CITY

Abigroup

Maunsell McIntyre

COX RAYNER

© COPYRIGHT THIS DRAWING AND DESIGN REMAINS THE PROPERTY OF MAUNSELL MCINTYRE PTY LTD AND MAY NOT BE COPIED WITHOUT PRIOR WRITTEN APPROVAL FROM THIS COMPANY

THE SIGNING OF THIS TITLE BLOCK CONFIRMS THE DESIGN AND DRAFTING OF THIS PROJECT HAVE BEEN PREPARED AND CHECKED IN ACCORDANCE WITH THE MAUNSELL MCINTYRE QUALITY ASSURANCE SYSTEM CERTIFIED TO AS/NZS ISO 9001-1994

DESIGNED	MCC	CHECKED	DDL
DRAWN	PJC	CHECKED	DDL
APPROVED	DDL	DATE	7.12.00

Cad ref: W:\ShortTerm\10307105\10307160_CAD\stage_2\general\G-004.dwg
Last modified: 20 Jan 11 - 11:37

Project Title: BRISBANE FERRY TERMINALS – CONTRACT No. K57/99/2001

Drawing Title: GENERAL
GENERAL NOTES
SHEET 2 OF 2

Status: FOR CONSTRUCTION

Drg No.: G-004

Rev: C

DOC.133.0065

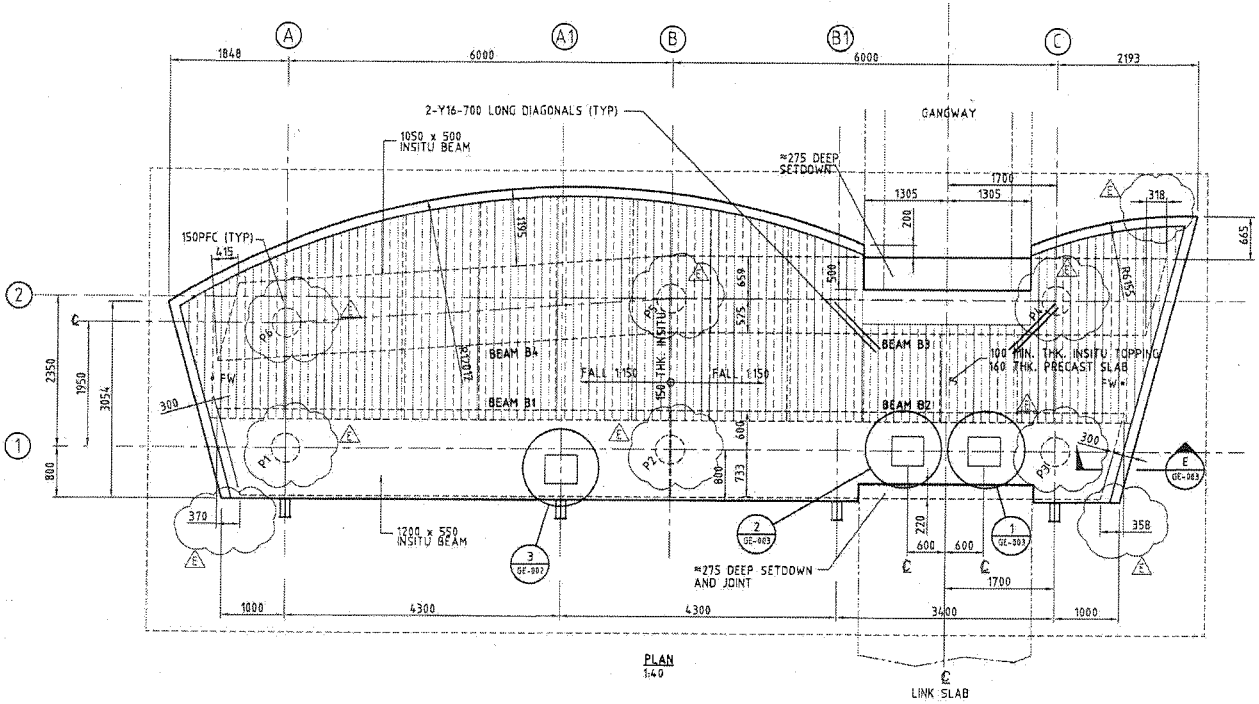

PLAN
1:40

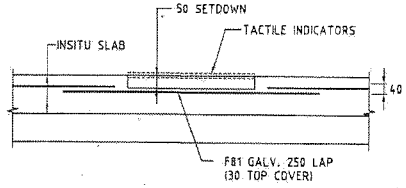

SLAB SETDOWN FOR TACTILES (TYP)
1:10
(REFER GA DRAWINGS FOR LOCATION OF TACTILES)

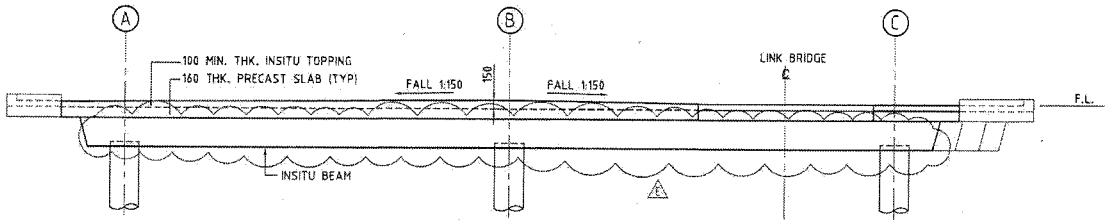

ELEVATION GRID 1
1:40

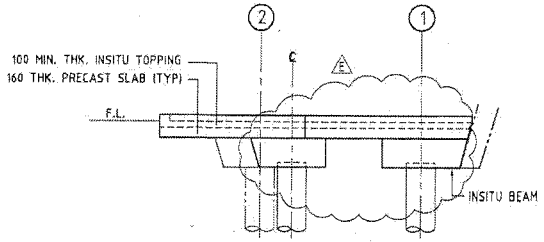

ELEVATION GRID A
1:40

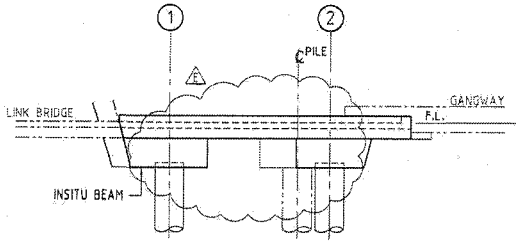

ELEVATION GRID C
1:40

FOR INFORMATION ONLY

NOTE
FW - FLOOR WASTE REFER SPECIFICATION AND NOMINAL 100Ø PVC PIPE CAST INTO PLANKS WITH 1-Y12 500 LONG LOCATED EACH LEG OF AN EQUAL TRIANGLE AROUND HOLE IN INSITU-SLAB
DF - 50Ø HOLE CAST BELOW DRINKING FOUNTAIN AS WATER OUTLET

No.	BY	DATE	DESCRIPTION	APPD
E	PJC	19.03.01	PRECAST TO INSITU HEADSTOCK CHANGE	
D	PJC	12.03.01	GENERAL REVISIONS	
C	JLP	07.03.01	ISSUED FOR CONSTRUCTION	
B	PJC	1.12.00	TENDER - GENERAL REVISIONS	
A	ET	31.10.00	FOR CONSTRUCTION	

Scales
0.4 0 0.4 0.8 1.2 1.6 2.0m
1:40 FULL SIZE A1

© COPYRIGHT THIS DRAWING AND DESIGN REMAINS THE PROPERTY OF MAUNSELL MCINTYRE PTY LTD AND MAY NOT BE COPIED WITHOUT PRIOR WRITTEN APPROVAL FROM THIS COMPANY

THE SIGNING OF THIS TITLE BLOCK CONFIRMS THE DESIGN AND DRAFTING OF THIS PROJECT HAVE BEEN PREPARED AND CHECKED IN ACCORDANCE WITH THE MAUNSELL MCINTYRE QUALITY ASSURANCE SYSTEM CERTIFIED TO AS/NZS ISO 9001-1994

DESIGNED	CCV	CHECKED	DDL
DRAWN	ET	CHECKED	DDL
APPROVED	DDL	DATE	7.12.00

Cad ref: W:\Short Term\10307100\10307100_CAD\stage_2\general\GE-001.dwg
Last modified: 20 Jan 11 - 11:38

Project Title: BRISBANE FERRY TERMINALS – CONTRACT No. K57/99/2001
Drawing Title: STANDARD DRAWINGS - ENGINEERING SHELTER LAYOUT
Status: FOR CONSTRUCTION
Drg No.: GE-001
Rev: E

BCC.133.0066

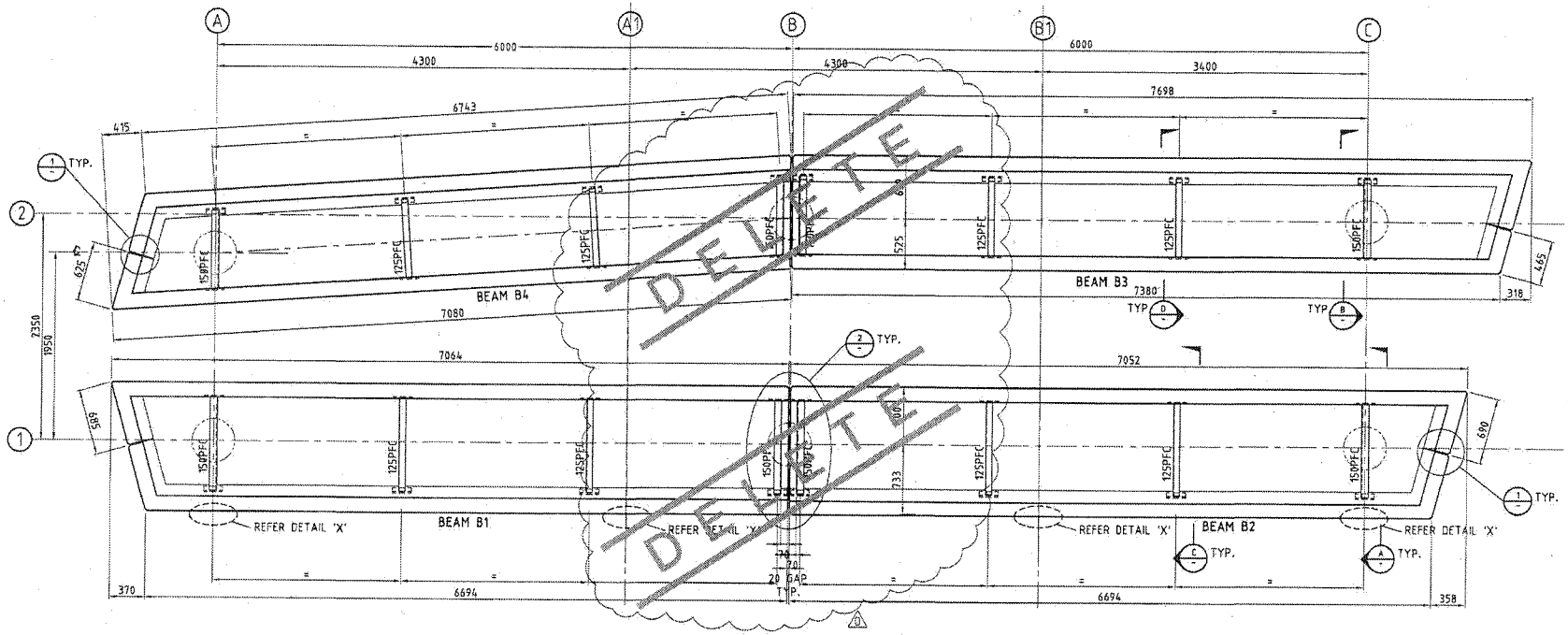

PRECAST/INSITU BEAMS LAYOUT
1:25 (INSITU BEAM DETAILS REFER DWG GE-003)

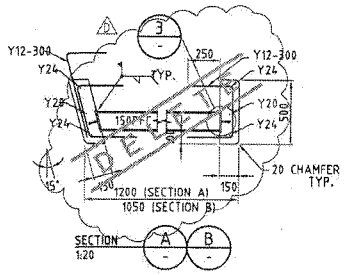

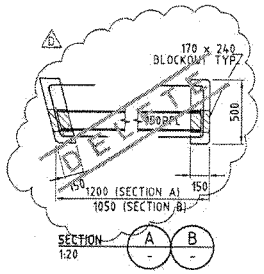

(ALTERNATIVE)

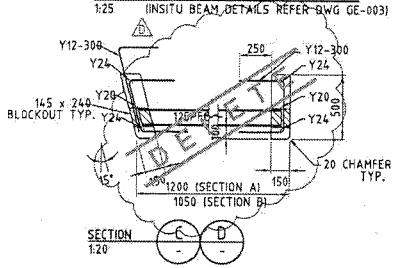

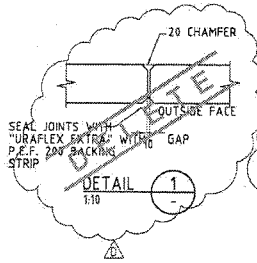

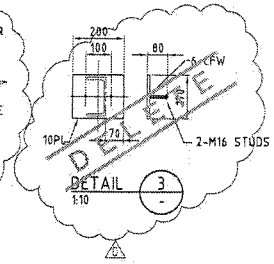

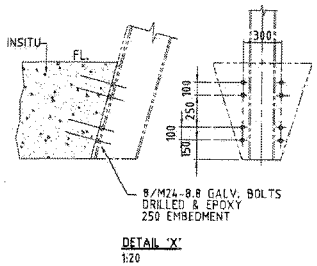

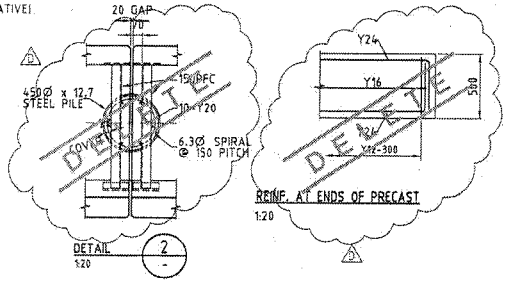

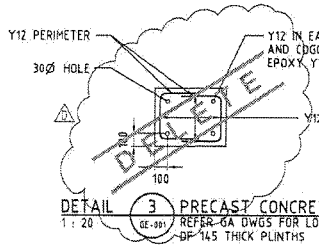

FOR INFORMATION ONLY

No.	BY	DATE	DESCRIPTION	APPD
D	PJC	19.03.01	PRECAST TO INSITU HEADSTOCK CHANGE	
C	AP	07.03.01	ISSUED FOR CONSTRUCTION	
B	PJC	1.12.00	TENDER - GENERAL REVISIONS	
A	ET	31.10.00	FOR CONSTRUCTION	

Scales
0.2 0 0.2 0.4 0.6 0.8 1.0m
1 : 20 FULL SIZE A1

BRISBANE CITY

Abi group

Maunsell McIntyre
COX RAYNER

© COPYRIGHT THIS DRAWING AND DESIGN REMAINS THE PROPERTY OF MAUNSELL MCINTYRE PTY LTD AND MAY NOT BE COPIED WITHOUT PRIOR WRITTEN APPROVAL FROM THIS COMPANY

THE SIGNING OF THIS TITLE BLOCK CONFIRMS THE DESIGN AND DRAFTING OF THIS PROJECT HAVE BEEN PREPARED AND CHECKED IN ACCORDANCE WITH THE MAUNSELL MCINTYRE QUALITY ASSURANCE SYSTEM CERTIFIED TO AS/NZS ISO 9001-1994

DESIGNED	CCV	CHECKED	DDL
DRAWN	ET	CHECKED	DDL
APPROVED	DDL	DATE	7.12.00

Cad ref: M:\ShortTerm\10307108\10307108_CAD\stage_2\general\GE-002.dwg
Last modified: 20 Jan 11 - 11:36

Project Title: BRISBANE FERRY TERMINALS – CONTRACT No. K57/99/2001
Drawing Title: STANDARD DRAWINGS - ENGINEERING SHELTER DETAILS SHEET 1 OF 2
Status: FOR CONSTRUCTION
Drg No.: GE-002
Rev: D

BCC 133 0067

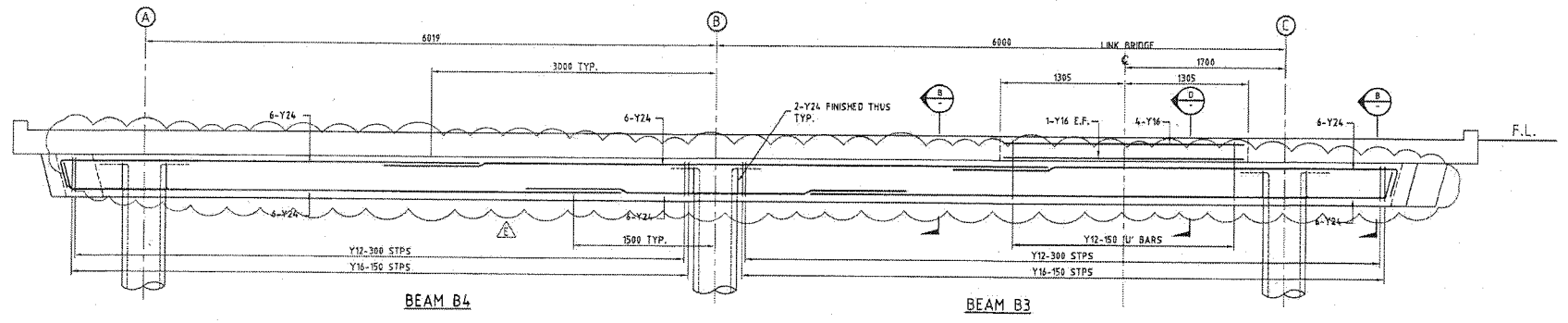

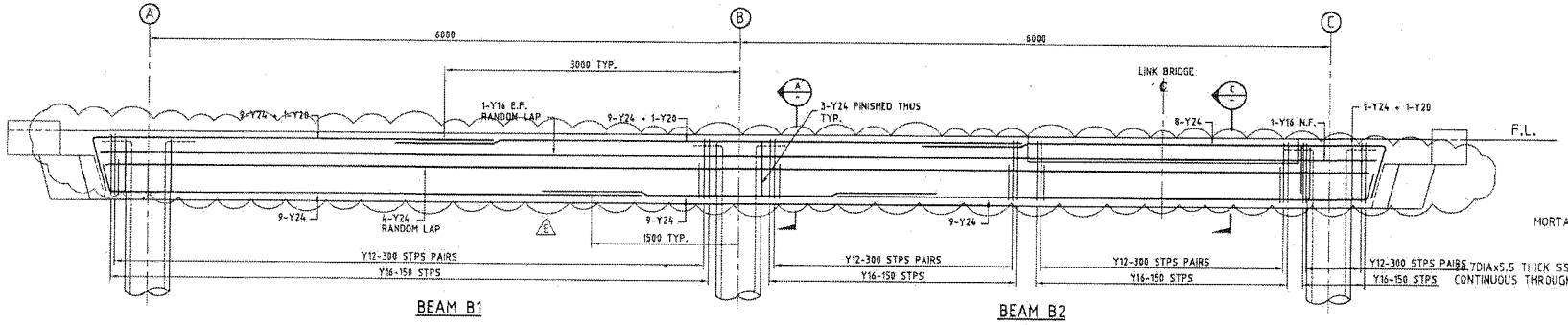

PRECAST/INSITU BEAM ELEVATIONS

1:25 (PRECAST BEAMS LAYOUT REFER DWG GE-002)

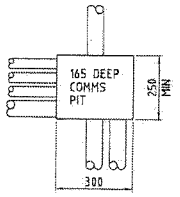

DETAIL 2 / 1 : 10 / GE-003

ELECTRICAL PIT WITH TACTILES ADHERED TO REMOVABLE LID

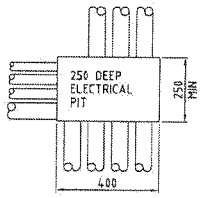

DETAIL 1 / 1 : 10 / GE-003

COMMUNICATION PIT WITH TACTILES ADHERED TO REMOVABLE LID

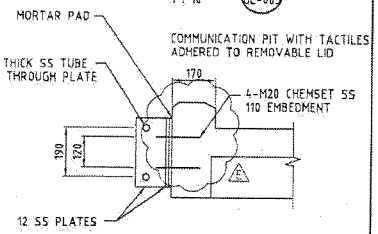

BALUSTRADE FIXINGS

1:10

FIXINGS FOR BALUSTRADES TYPE 1, 2 AND 3 TYP. REFER GA DRAWINGS

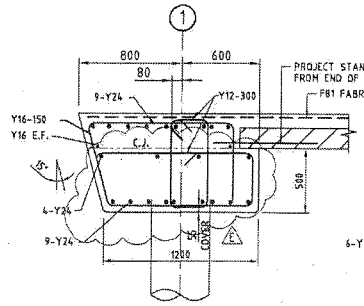

SECTION A / 1:20

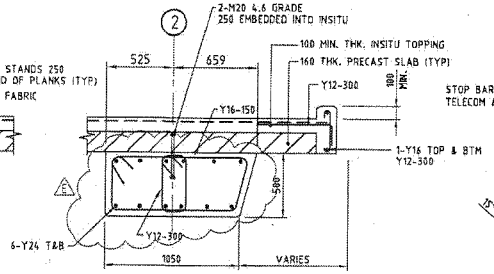

SECTION B / 1:20

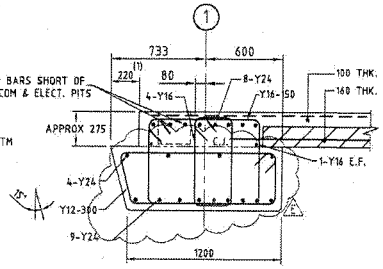

SECTION C / 1:20

(1) RECESS TO BE CAST WITH LATHAM JOINT FIXTURES REFER DETAIL 3/PE1-003

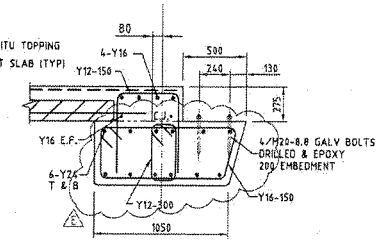

SECTION D / 1:20

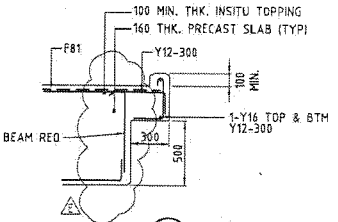

SECTION E / 1:20 / GE-003

FOR INFORMATION ONLY

No.	BY	DATE	DESCRIPTION	APPD
E	PJC	19.03.01	PRECAST TO INSITU HEADSTOCK CHANGE	
D	PJC	12.03.01	GENERAL REVISIONS	
C	JLP	07.03.01	ISSUED FOR CONSTRUCTION	
B	PJC	1.12.00	TENDER - GENERAL REVISIONS	
A	ET	31.10.00	FOR CONSTRUCTION	

Scales: 0.2 0 0.2 0.4 0.6 0.8 1.0m — 1 : 20 FULL SIZE A1

BRISBANE CITY

Abi group

Maunsell McIntyre

COX RAYNER

© COPYRIGHT THIS DRAWING AND DESIGN REMAINS THE PROPERTY OF MAUNSELL MCINTYRE PTY LTD AND MAY NOT BE COPIED WITHOUT PRIOR WRITTEN APPROVAL FROM THIS COMPANY

THE SIGNING OF THIS TITLE BLOCK CONFIRMS THE DESIGN AND DRAFTING OF THIS PROJECT HAVE BEEN PREPARED AND CHECKED IN ACCORDANCE WITH THE MAUNSELL MCINTYRE QUALITY ASSURANCE SYSTEM CERTIFIED TO AS/NZS ISO 9001-1994

DESIGNED	CEV	CHECKED	DDL
DRAWN	ET	CHECKED	DDL
APPROVED	DDL	DATE	7.12.00

Cad ref: W:\ShortTerm\10307100\10367100_CAD\stage_2\general\SE-003.dwg
Last modified: 20 Jan 11 - 15:38

Project Title: BRISBANE FERRY TERMINALS – CONTRACT No. K57/99/2001

Drawing Title: STANDARD DRAWINGS - ENGINEERING SHELTER DETAILS SHEET 2 OF 2

Status: FOR CONSTRUCTION

Drg No.: GE-003

Rev: E

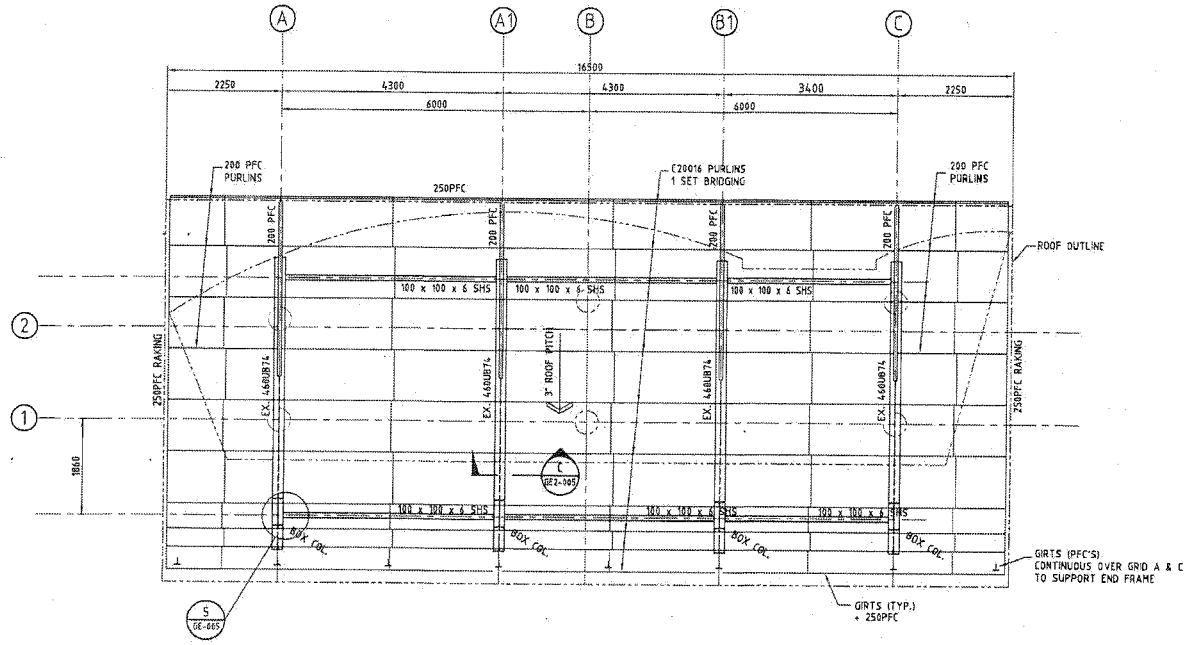

ROOF LAYOUT

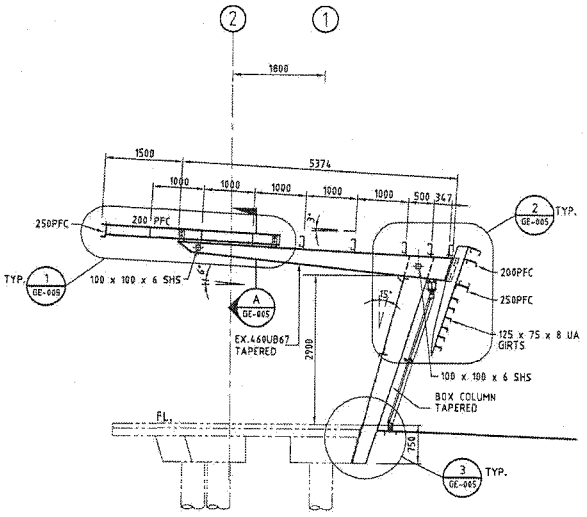

ELEVATION GRID A1 & B1

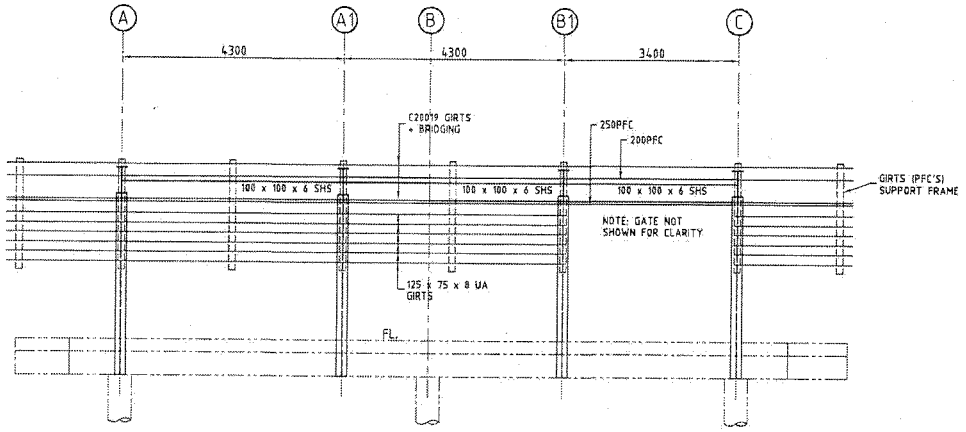

ELEVATION

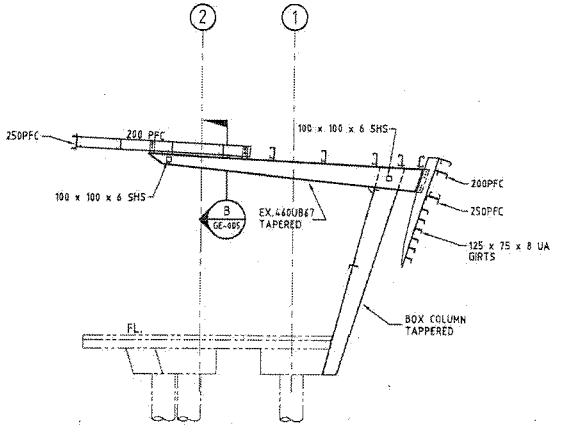

ELEVATION GRID A

ELEVATION GRID C (OPP.H.)

FOR INFORMATION ONLY

NOTE: ALL BOLT FIXINGS TO STEELWORK WHICH ARE VISIBLE ARE TO BE STAINLESS STEEL DOUBLE SIDED ACORN-HEADED STUD TYPE UNO.

0.5 0 1 2m
1 : 50 FULL SIZE A1

No.	BY	DATE	DESCRIPTION	APPD
C	JLP	07.03.01	ISSUED FOR CONSTRUCTION	
B	PJC	1.12.00	TENDER - GENERAL REVISIONS	
A	ET	31.10.00	FOR CONSTRUCTION	

Scales

BRISBANE CITY

Abi group

Maunsell McIntyre

COX RAYNER

© COPYRIGHT THIS DRAWING AND DESIGN REMAINS THE PROPERTY OF MAUNSELL MCINTYRE PTY LTD AND MAY NOT BE COPIED WITHOUT PRIOR WRITTEN APPROVAL FROM THIS COMPANY

THE SIGNING OF THIS TITLE BLOCK CONFIRMS THE DESIGN AND DRAFTING OF THIS PROJECT HAVE BEEN PREPARED AND CHECKED IN ACCORDANCE WITH THE MAUNSELL MCINTYRE QUALITY ASSURANCE SYSTEM CERTIFIED TO AS/NZS ISO 9001-1994

DESIGNED	CCV	CHECKED	DDL
DRAWN	ET	CHECKED	DDL
APPROVED	DDL	DATE	7.12.00

Cad ref: W:\ShortTerm\10307101\10307160_CAD\sfage_7\general\GE-004.dwg
Last modified: 20 Jan 11 - 11:38

Project Title: BRISBANE FERRY TERMINALS – CONTRACT No. K57/99/2001

Drawing Title: STANDARD DRAWINGS - ENGINEERING ROOF LAYOUT AND ELEVATIONS

Status: FOR CONSTRUCTION

Drg No.: GE-004

Rev:

BCC.133.0069

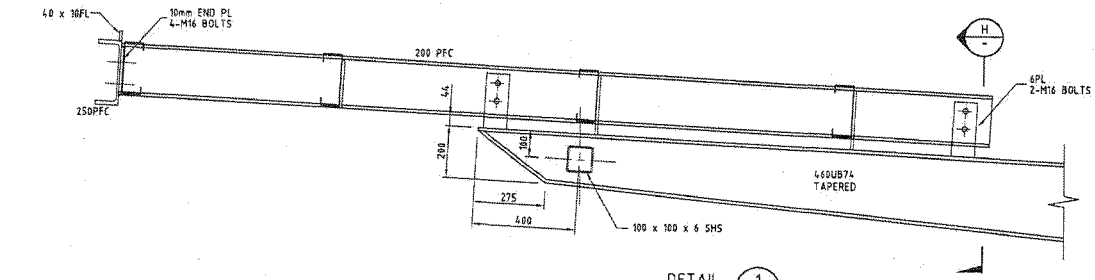

DETAIL 1 1:10 GE-004

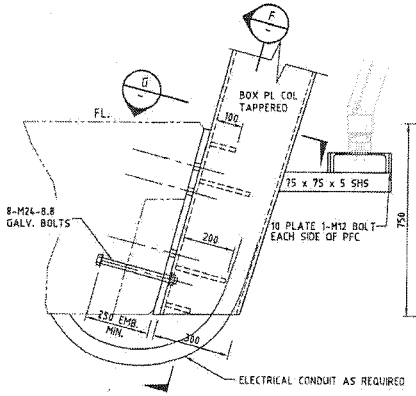

DETAIL 3 1:10 GE-004

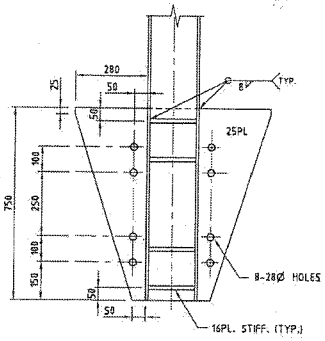

SECTION F 1:10

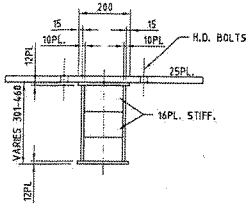

SECTION G 1:10

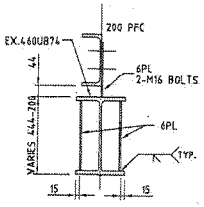

SECTION H 1:10

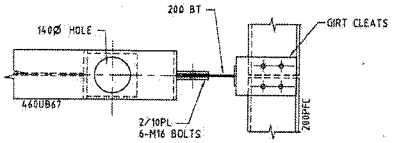

SECTION E 1:10

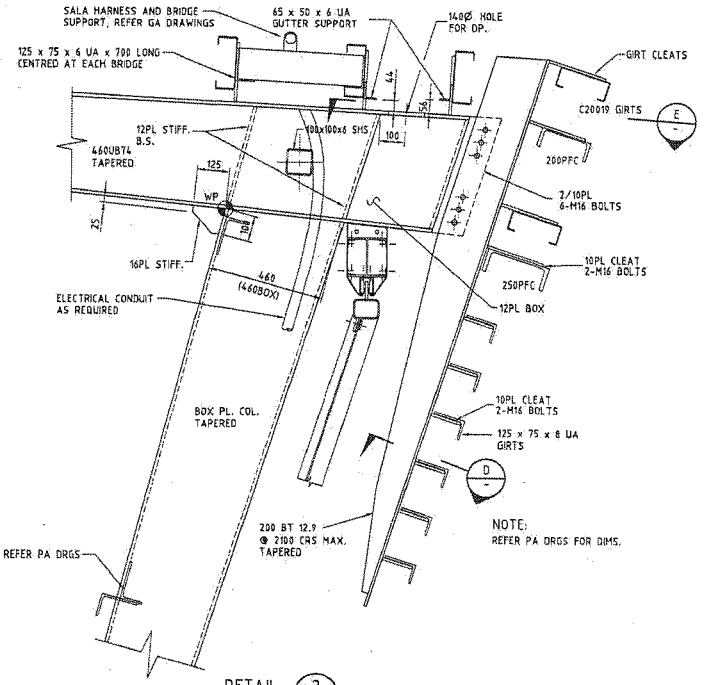

DETAIL 2 1:10 GE-004

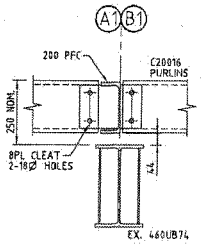

SECTION A 1:10 GE-004

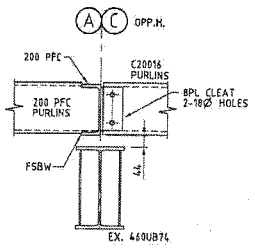

SECTION B 1:10 GE-004

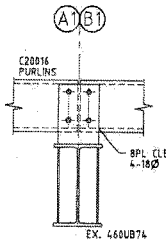

SECTION C 1:10 GE-004

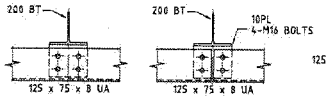

SECTION D 1:10

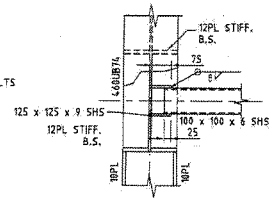

DETAIL 5 1:10 GE-004

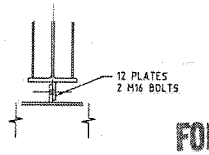

SECTION J 1:10

FOR INFORMATION ONLY

NOTE: ALL BOLT FIXINGS TO STEELWORK WHICH ARE VISIBLE ARE TO BE STAINLESS STEEL DOUBLE SIDED ACORN-HEADED STUD TYPE.

100 0 100 200 300 400 500mm
1 : 10 FULL SIZE A1

© COPYRIGHT THIS DRAWING AND DESIGN REMAINS THE PROPERTY OF MAUNSELL McINTYRE PTY LTD AND MAY NOT BE COPIED WITHOUT PRIOR WRITTEN APPROVAL FROM THIS COMPANY

No.	BY	DATE	DESCRIPTION	APPD
C	JLP	07.03.01	ISSUED FOR CONSTRUCTION	
B	PJC	1.12.00	TENDER - GENERAL REVISIONS	
A	ET	31.10.00	FOR CONSTRUCTION	

Scales

BRISBANE CITY

Abigroup

Maunsell McIntyre

COX RAYNER

THE SIGNING OF THIS TITLE BLOCK CONFIRMS THE DESIGN AND DRAFTING OF THIS PROJECT HAVE BEEN PREPARED AND CHECKED IN ACCORDANCE WITH THE MAUNSELL McINTYRE QUALITY ASSURANCE SYSTEM CERTIFIED TO AS/NZS ISO 9001:1994

DESIGNED	CCV	CHECKED	DDL
DRAWN	ET	CHECKED	DDL
APPROVED	DDL	DATE	7.12.00

Cad ref: W:\ShortTerm\10307100\10307100_CAD\stage_2\general\GE-005.dwg
Last modified: 28 Jan 11 - 11:38

Project Title: BRISBANE FERRY TERMINALS – CONTRACT No. K57/99/2001

Drawing Title: STANDARD DRAWINGS - ENGINEERING
ROOF CONNECTION DETAILS

Status: FOR CONSTRUCTION

Drg No.: GE-005

Rev: C

BCC.133.0070

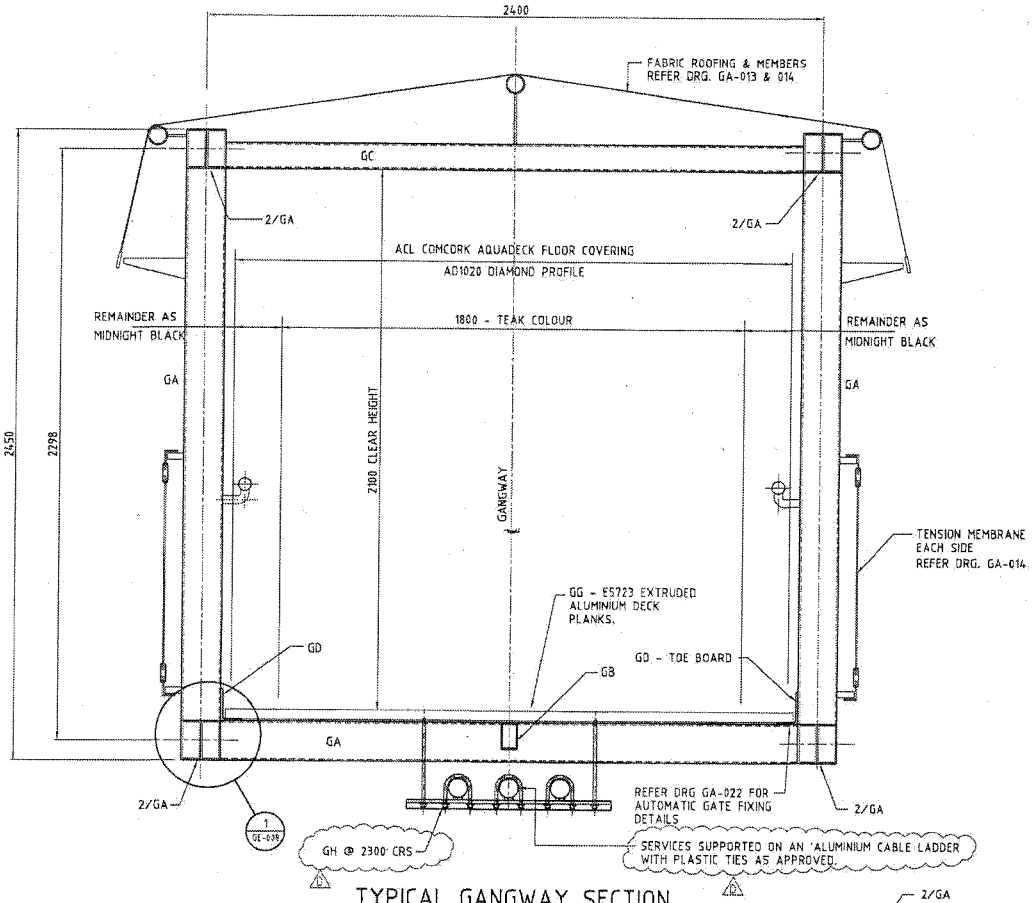

TYPICAL GANGWAY SECTION

SCALE 1 : 10

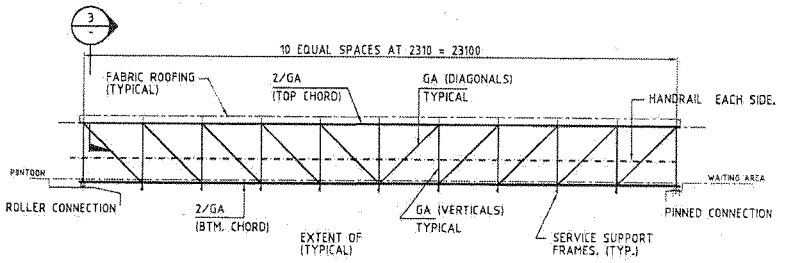

ELEVATION - GANGWAY TRUSS

SCALE 1 : 100

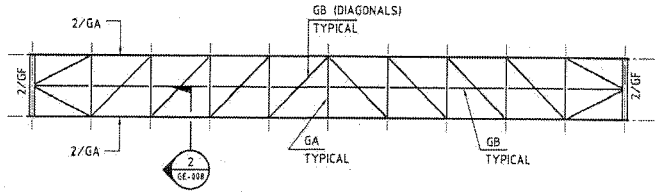

PLAN - GANGWAY TRUSS BTM. FRAME

SCALE 1 : 100

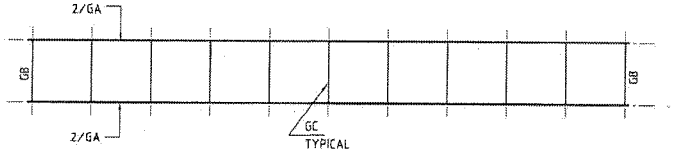

PLAN - GANGWAY TRUSS TOP FRAME

SCALE 1 : 100

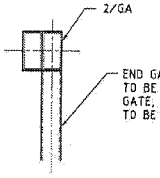

SECTION 3 / 1 : 10

MEMBER SCHEDULE - ALUMINIUM

MARK	DESCRIPTION	SIZE	EXTRUSION No.
GA	TRUSS FRAMING	152.4 x 76.2 x 6.4 RHS	E3267
GB	TRUSS FRAMING	101.6 x 63.5 x 4.0 RHS	E2801
GC	TRUSS FRAMING	101.6 x 63.5 x 6.4 RHS	E8500
GD	TOE BOARD	125x80x8 ANGLE	E20711
GE	(NOT USED)		
GF	TRUSS FRAMING	133.4x88.9 PFC	ES804
GG	FLOOR DECKING PLANKS	-	ES723
GH	SERVICES SUPPORT FRAME	125x50x6 ANGLE	

NOTES

1. PROVIDE NEOPRENE PADS OR EQUIV. INSULATION TO ALL PIPE CABLE LADDER/BRACKET/STRAP INTERFACE BOLT PADS TO BRACKETS. USE ALUMINIUM NUTS, BOLTS & WASHERS. PLANKS.
2. ALL GANGWAY MEMBERS ARE ALUMINUM GRADE 6061-T6.
3. GANGWAY TYPE APPLIES FOR PROJECTS 1-3 AND 5.

FOR INFORMATION ONLY

No.	BY	DATE	DESCRIPTION	APPD
D	PJC	12.03.01	GENERAL REVISIONS	
C	JLP	07.03.01	ISSUED FOR CONSTRUCTION	
B	PJC	1.12.00	TENDER - GENERAL REVISIONS	
A	ET	31.10.00	FOR CONSTRUCTION	

Scales

© COPYRIGHT THIS DRAWING AND DESIGN REMAINS THE PROPERTY OF MAUNSELL MCINTYRE PTY LTD AND MAY NOT BE COPIED WITHOUT PRIOR WRITTEN APPROVAL FROM THIS COMPANY

Maunsell McIntyre
COX RAYNER

THE SIGNING OF THIS TITLE BLOCK CONFIRMS THE DESIGN AND DRAFTING OF THIS PROJECT HAVE BEEN PREPARED AND CHECKED IN ACCORDANCE WITH THE MAUNSELL McINTYRE QUALITY ASSURANCE SYSTEM CERTIFIED TO AS/NZS ISO 9001-1994

DESIGNED	MCC	CHECKED	DDL
DRAWN	PJC	CHECKED	DDL
APPROVED	DDL	DATE	7.12.00

Cad ref: W:\ShortTerm\10307100\10307100_CAD\stage_2\general\GE-006.dwg
Last modified: 20 Jan 11 - 11:38

Project Title: BRISBANE FERRY TERMINALS – CONTRACT No. K57/99/2001

Drawing Title: STANDARD DRAWINGS - ENGINEERING GANGWAY FRAMING LAYOUT

Status: FOR CONSTRUCTION

Drg No: GE-006

Rev: D

BCC133.0071

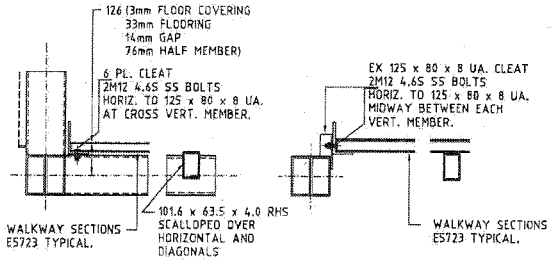

DETAIL 1 (GE-007) 1:10

SECTION 2 (GE-007) 1:10

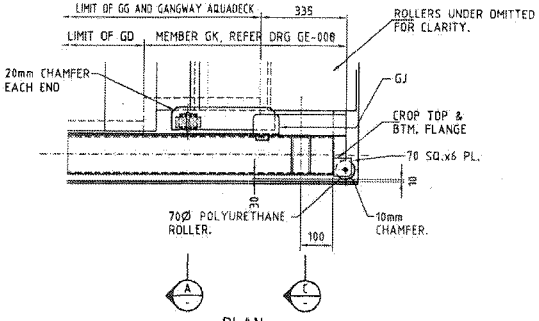

PLAN 1:10

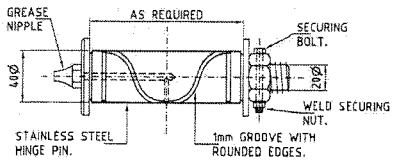

GANGWAY HINGE PIN DETAIL
1:2
SIMILAR DETAIL FOR 32mm Ø PIN FOR ROLLERS AT OTHER END OF GANGWAY.

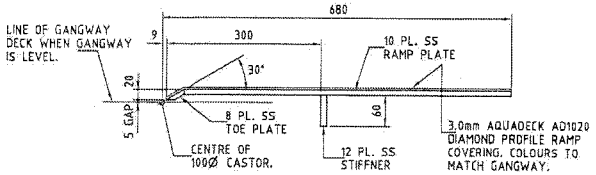

BRIDGING RAMP DETAIL
1:5

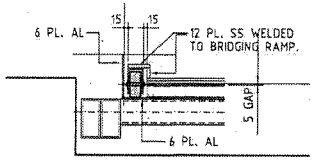

SECTION A 1:10

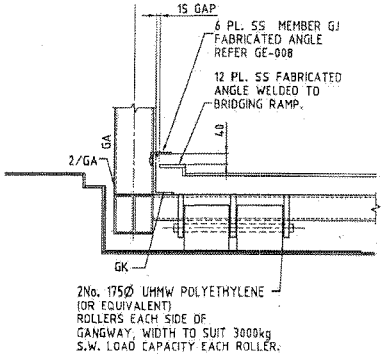

SECTION C 1:10

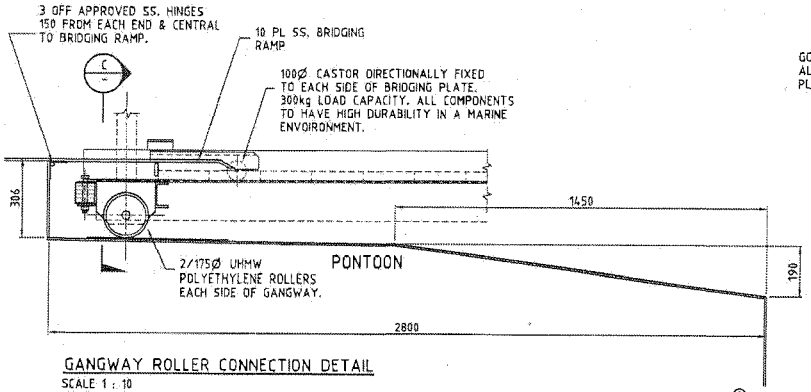

GANGWAY ROLLER CONNECTION DETAIL
SCALE 1 : 10

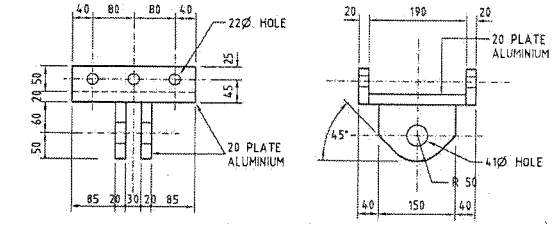

GANGWAY TOP HINGE DETAIL
1:5 NOTE: 4.5 THK. 90Ø NYLON WASHERS (OR EQUAL) TO BE INSTALLED BETWEEN MOVING PLATES

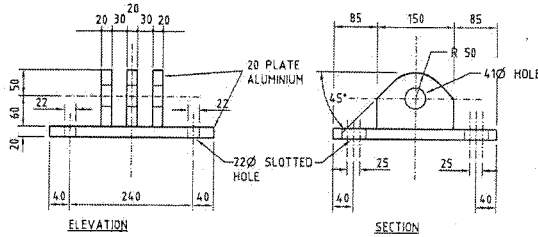

GANGWAY BOTTOM HINGE DETAIL
1:5 TOP & BOTTOM HINGES TO BE MANUFACTURED IN SETS AND CHECKED FOR FIT BEFORE INSTALLATION

FOR INFORMATION ONLY

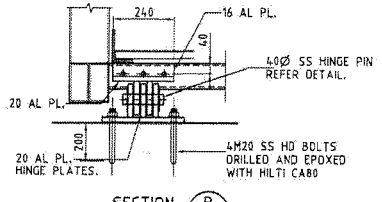

SECTION B 1:10

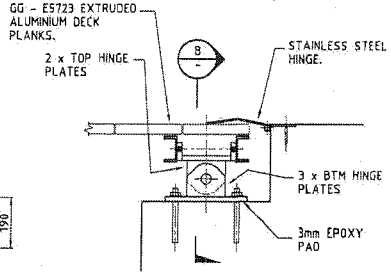

GANGWAY PINNED CONNECTION DETAIL
SCALE 1 : 10

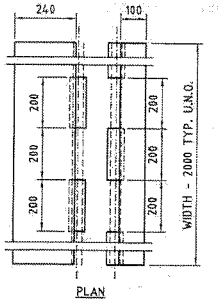

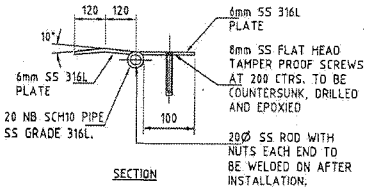

SS HINGE DETAIL
1:5

© COPYRIGHT THIS DRAWING AND DESIGN REMAINS THE PROPERTY OF MAUNSELL MCINTYRE PTY LTD AND MAY NOT BE COPIED WITHOUT PRIOR WRITTEN APPROVAL FROM THIS COMPANY

No.	BY	DATE	DESCRIPTION	APPD
C	JLP	07.03.01	ISSUED FOR CONSTRUCTION	
B	PJC	1.12.00	TENDER - GENERAL REVISIONS	
A	ET	31.10.00	FOR CONSTRUCTION	

Scales

THE SIGNING OF THIS TITLE BLOCK CONFIRMS THE DESIGN AND DRAFTING OF THIS PROJECT HAVE BEEN PREPARED AND CHECKED IN ACCORDANCE WITH THE MAUNSELL MCINTYRE QUALITY ASSURANCE SYSTEM CERTIFIED TO AS/NZS ISO 9001-1994

DESIGNED	MCC	CHECKED	DDL
DRAWN	PJC	CHECKED	DDL
APPROVED	DDL	DATE	7.12.00

Cad ref: W:\ShortTerm\10307100\10307100_CAD\stage_2\general\GE-007.dwg
Last modified: 20 Jan 15 - 11:38

Project Title: BRISBANE FERRY TERMINALS – CONTRACT No. K57/99/2001

Drawing Title: STANDARD DRAWINGS - ENGINEERING
GANGWAY FRAMING DETAILS
SHEET 1 OF 2

Status: FOR CONSTRUCTION

Drg No.: GE-007

Rev: C

BCC133.0072

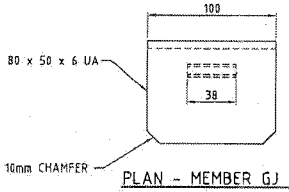

PLAN - MEMBER GJ (AL)
1 : 2
REFER SECTION C/GE-007

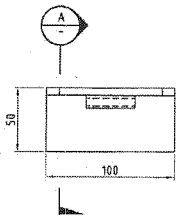

ELEVATION
1 : 2

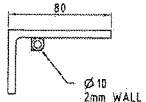

SECTION A
1 : 2

NOTE:
MEMBER GJ IS TO 'LOCK IN' THE BRIDGE RAMP.
UNDERSIDE PINS ALLOW FOR A MORE UN-NOTICABLE REMOVAL MECHANISM.

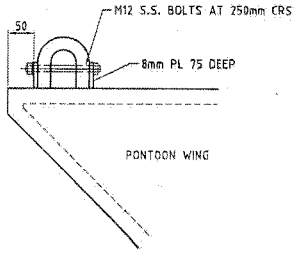

DETAIL 3/011
1 : 5

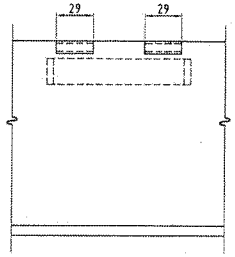

ELEVATION
1 : 2

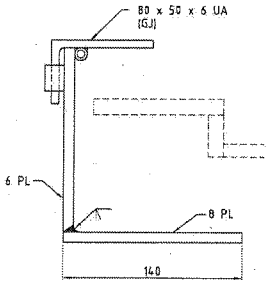

SECTION B
1 : 2

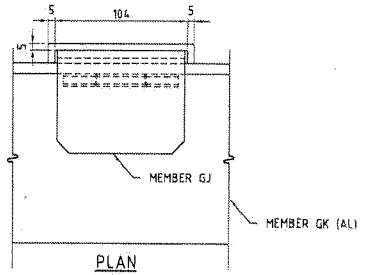

PLAN
1 : 2
REFER SECTION C/GE-007

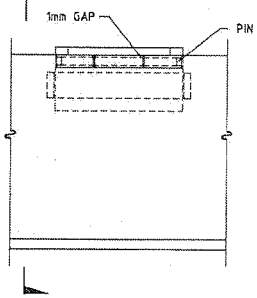

ELEVATION
1 : 2

FOR INFORMATION ONLY

© COPYRIGHT THIS DRAWING AND DESIGN REMAINS THE PROPERTY OF MAUNSELL MCINTYRE PTY LTD AND MAY NOT BE COPIED WITHOUT PRIOR WRITTEN APPROVAL FROM THIS COMPANY

No.	BY	DATE	DESCRIPTION	APPD
B	AJP	07.03.01	ISSUED FOR CONSTRUCTION	
A	ET	1.12.00	FOR CONSTRUCTION	

Scales

BRISBANE CITY

Abi group

Maunsell McIntyre
COX RAYNER

THE SIGNING OF THIS TITLE BLOCK CONFIRMS THE DESIGN AND DRAFTING OF THIS PROJECT HAVE BEEN PREPARED AND CHECKED IN ACCORDANCE WITH THE MAUNSELL MCINTYRE QUALITY ASSURANCE SYSTEM CERTIFIED TO AS/NZS ISO 9001-1994

DESIGNED	MCC	CHECKED	DDL
DRAWN	PJC	CHECKED	DDL
APPROVED	DDL	DATE	7.12.00

Cad ref: W:\Short Term\10307100\10307100_CAD\xrefs_2\general\GE-008.dwg
Last modified: 20 Jan 11 - 11:38

Project Title: BRISBANE FERRY TERMINALS - CONTRACT No. K57/99/2001

Drawing Title: STANDARD DRAWINGS - ENGINEERING
GANGWAY FRAMING DETAILS
SHEET 2 OF 2

Status: FOR CONSTRUCTION

Drg No.: GE-008

Rev: B

BCC.133.0073

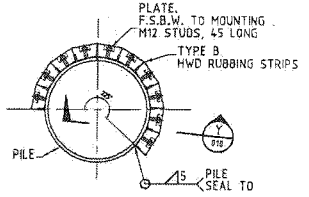

SECTION A
SCALE 1:10

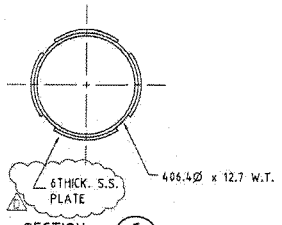

SECTION C
SCALE 1 : 10

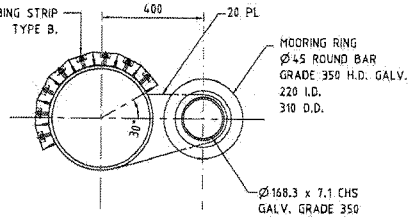

SECTION D
SCALE 1 : 10

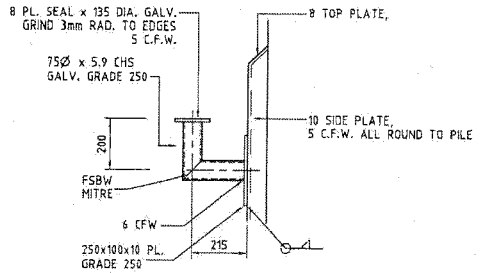

DETAIL 1
SCALE 1:10

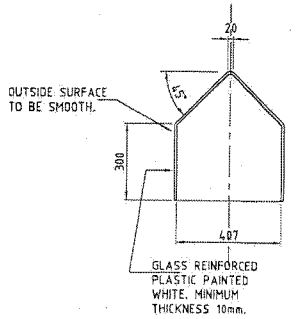

PILE CONICAL CAP
SCALE 1 : 10

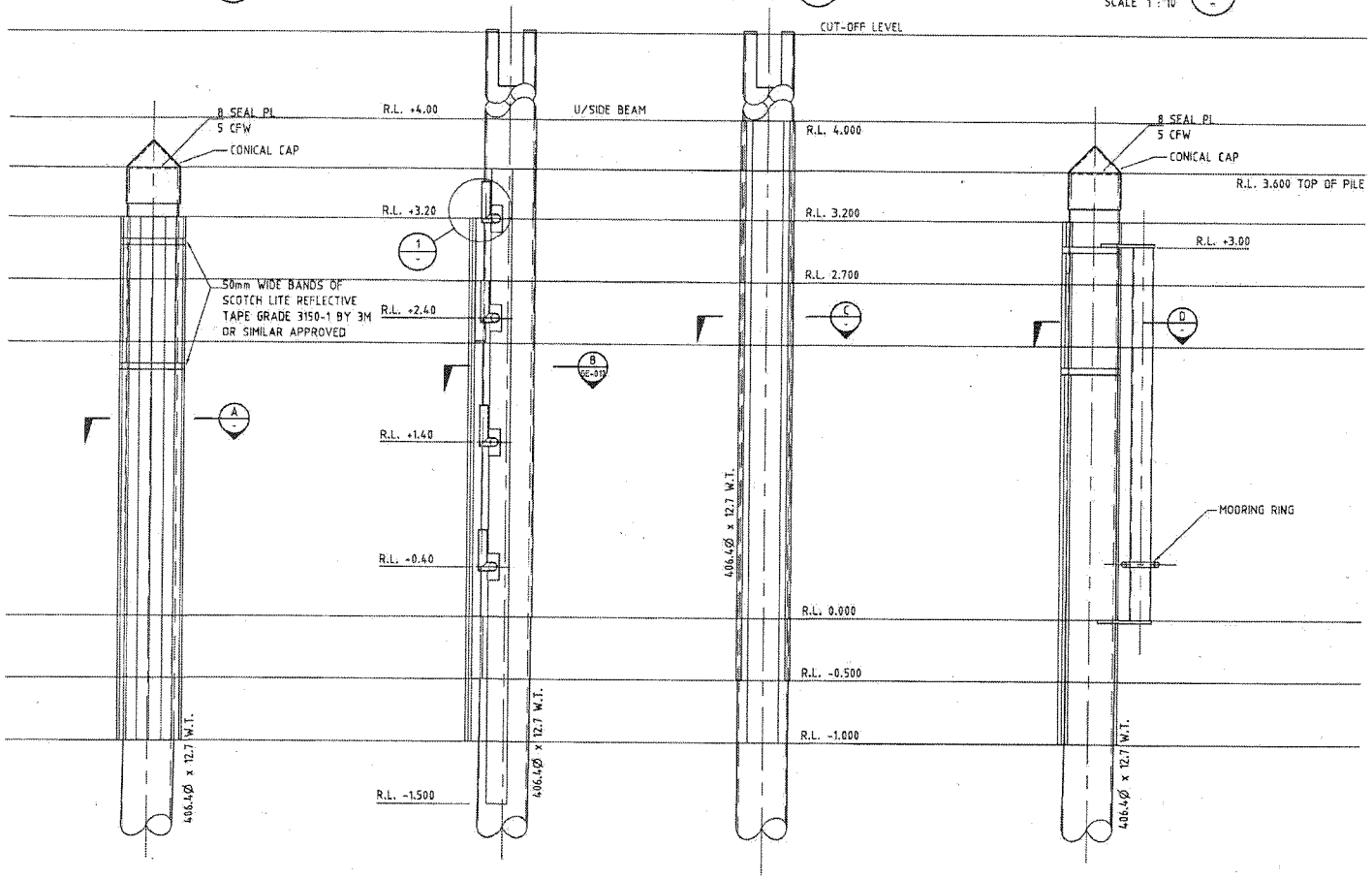

PILE TYPE A
1:20

PILE TYPE B2
B1 OPPOSITE HAND
1:20

PILE TYPE C
1:20

PILE TYPE D1
D2 OPPOSITE HAND
1:20

FOR INFORMATION ONLY

NOTES

1. FOR PILE & DETAILS REFER TO PILING SCHEDULE DRG. No'S PE1-002, PE2-002, PE3-002 & PE5-002
2. REFLECTIVE TAPE TO BE APPLIED AS DISCRETE PATCHES TO EACH TIMBER (NOT AS ONE PIECE WRAPPED AROUND THE FACE OF ALL THE TIMBERS)- TIMBER TO BE SANDED AND SEALED UNDER THE TAPE, BEFORE PRIMING ETC. AS PER THE MANUFACTURERS INSTRUCTIONS.
3. 406Ø PILES TO BE GRADE 350. (A)

© COPYRIGHT THIS DRAWING AND DESIGN REMAINS THE PROPERTY OF MAUNSELL MCINTYRE PTY LTD AND MAY NOT BE COPIED WITHOUT PRIOR WRITTEN APPROVAL FROM THIS COMPANY

No.	BY	DATE	DESCRIPTION	APPD
D	PJC	12.03.01	GENERAL REVISIONS	
C	JLP	07.03.01	ISSUED FOR CONSTRUCTION	
B	PJC	1.12.00	TENDER - GENERAL REVISIONS	
A	PJC	31.10.00	FOR CONSTRUCTION	

Scales

BRISBANE CITY

Abigroup

Maunsell McIntyre

COX RAYNER

THE SIGNING OF THIS TITLE BLOCK CONFIRMS THE DESIGN AND DRAFTING OF THIS PROJECT HAVE BEEN PREPARED AND CHECKED IN ACCORDANCE WITH THE MAUNSELL MCINTYRE QUALITY ASSURANCE SYSTEM CERTIFIED TO AS/NZS ISO 9001-1994

DESIGNED	MCC	CHECKED	DDL
DRAWN	PJC	CHECKED	DDL
APPROVED	DDL	DATE	7.12.00

Cad ref: W:\ShortTerm\103971001\18307100_CAD\stage_2\general\GE-009.dwg
Last modified: 26 Jan 11 - 11:38

Project Title: BRISBANE FERRY TERMINALS – CONTRACT No. K57/99/2001

Drawing Title: STANDARD DRAWINGS - ENGINEERING
PILE AND FENDER DETAILS
SHEET 1 OF 2

Status: FOR CONSTRUCTION

Drg No.: GE-009

Rev: D

60

BCC.133.0074

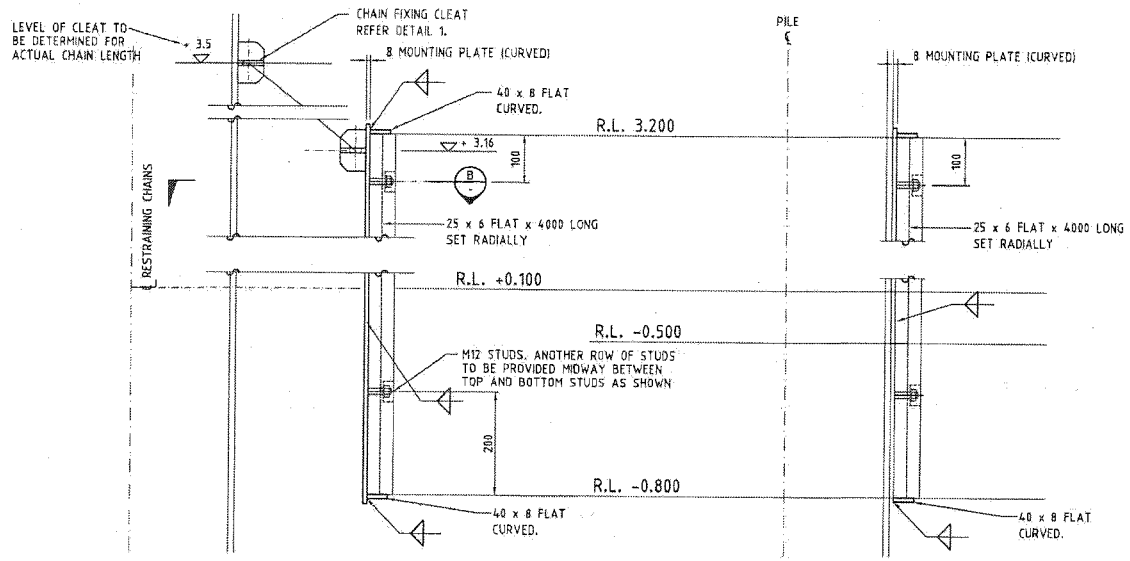

SECTION X SCALE 1:5

SECTION Y SCALE 1:5 (009)

DETAILS AS PER SECTION X U.N.O.

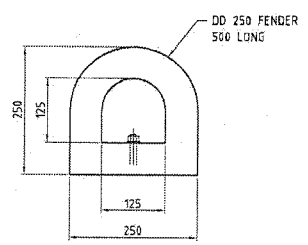

FENDER DETAILS 1:5

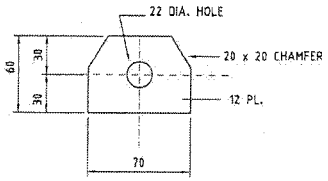

DETAIL 1 CHAIN FIXING CLEAT SCALE 1:2 (TYPICAL)

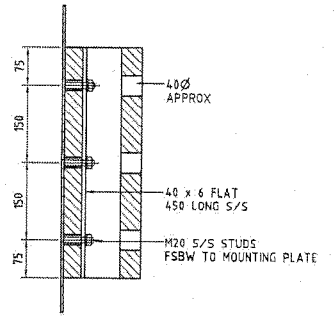

SECTION A SCALE 1:5

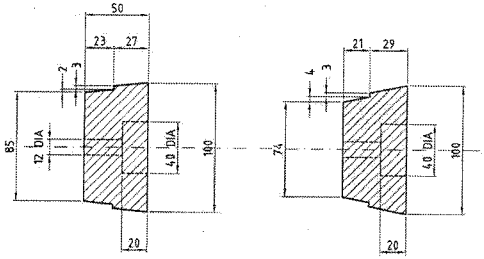

100 x 50 x 4000 HWD

HWD. RUBBING STRIP TYPE A SCALE 1:2

100 x 50 x 4000 HWD

HWD. RUBBING STRIP TYPE B SCALE 1:2

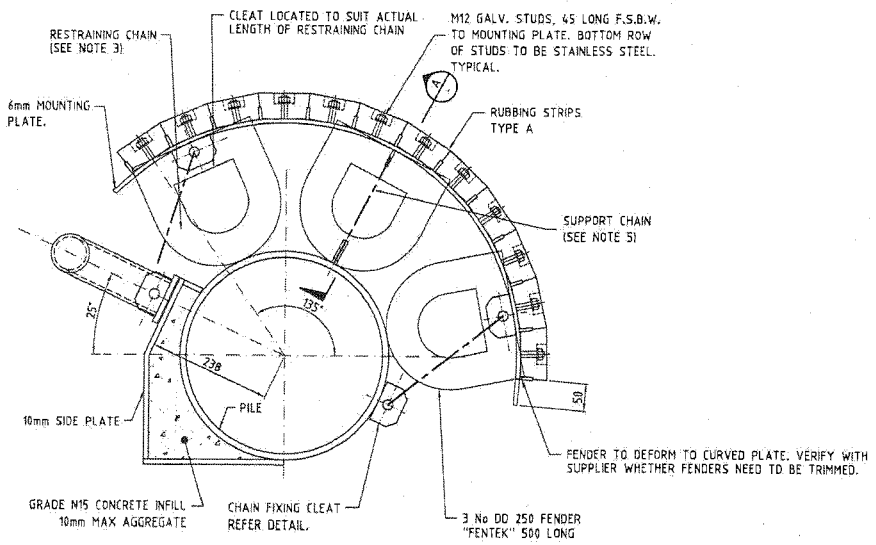

SECTION B SCALE 1:5 (009)

PILE TYPE B2, B1 OPP. HAND

FOR INFORMATION ONLY

NOTES

1. READ IN CONJUNCTION WITH DRG. G-003.
2. ALL WELDS SHALL BE FULL PENETRATION BUTT WELDS UNLESS NOTED OTHERWISE
3. RESTRAINING CHAINS TO CONSIST OF 2 No 3.2t SWL ALLOY SHACKLES (SCREW PIN DEE) CHAIN WITH ONE LINK OF 20mm PROOF COIL CHAIN (MEDIUM LINKS) ALL HD GALV.
4. STUDS TO BE TAPED AND SEALED DURING PAINTING AND TOUCHED UP WITH PAINT AFTER BOLTS TIGHTENED.
5. SUPPORT CHAIN TO CONSIST OF 1 No 4t SWL ALLOY SHACKLES (SCREW PIN DEE) CHAIN WITH THREE LINKS OF 20mm PROOF COIL CHAIN (MEDIUM LINKS) ALL HD GALV.

No.	BY	DATE	DESCRIPTION	APPD
C	JLP	07.03.01	ISSUED FOR CONSTRUCTION	
B	PJC	1.12.00	TENDER - GENERAL REVISIONS	
A	PJC	31.10.00	FOR CONSTRUCTION	

Scales

Maunsell McIntyre

COX RAYNER

© COPYRIGHT THIS DRAWING AND DESIGN REMAINS THE PROPERTY OF MAUNSELL MCINTYRE PTY LTD AND MAY NOT BE COPIED WITHOUT PRIOR WRITTEN APPROVAL FROM THIS COMPANY

THE SIGNING OF THIS TITLE BLOCK CONFIRMS THE DESIGN AND DRAFTING OF THIS PROJECT HAVE BEEN PREPARED AND CHECKED IN ACCORDANCE WITH THE MAUNSELL MCINTYRE QUALITY ASSURANCE SYSTEM CERTIFIED TO AS/NZS ISO 9001-1994

DESIGNED	MCC	CHECKED	DDL
DRAWN	PJC	CHECKED	DDL
APPROVED	DDL	DATE	7.12.00

Cad ref: W:\Short Term\10307100\10307100_CAD\abaqa_2\general\GE-010.dwg
Last modified: 20 Jan 11 - 11:38

Project Title: BRISBANE FERRY TERMINALS – CONTRACT No. K57/99/2001

Drawing Title: STANDARD DRAWINGS - ENGINEERING PILE AND FENDER DETAILS SHEET 2 OF 2

Status: FOR CONSTRUCTION

Drg No.: GE-010

Rev: C

BCC133.0075

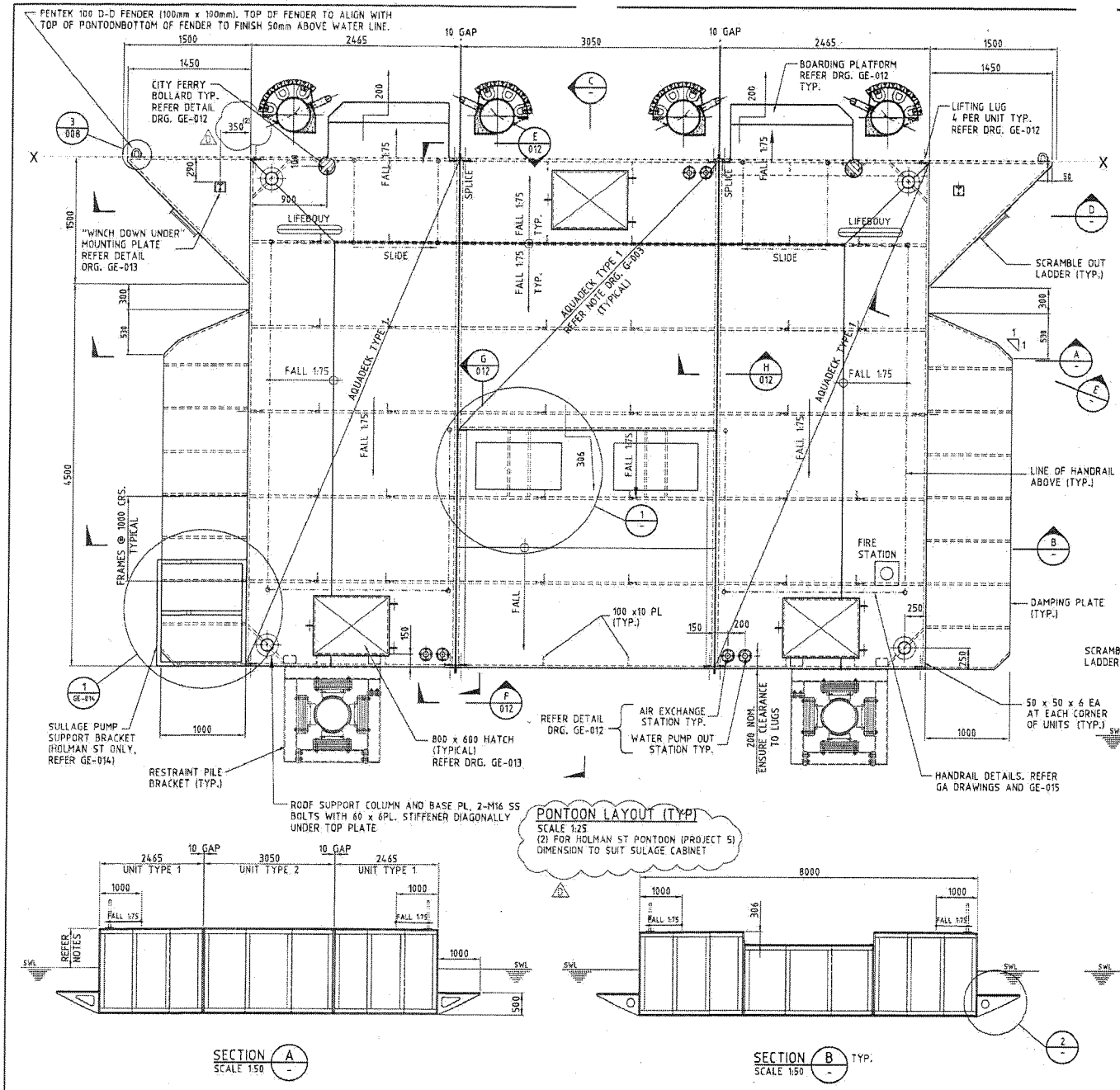

PONTOON LAYOUT (TYP)

SCALE 1:25

(2) FOR HOLMAN ST PONTOON (PROJECT 5) DIMENSION TO SUIT SULAGE CABINET

SECTION A
SCALE 1:50

SECTION B TYP.
SCALE 1:50

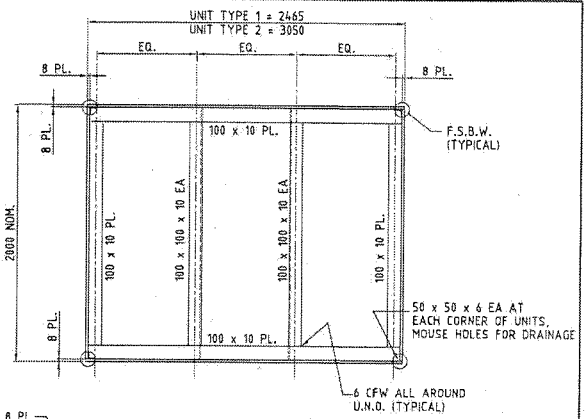

TYPICAL FRAME SECTION

SCALE 1:20

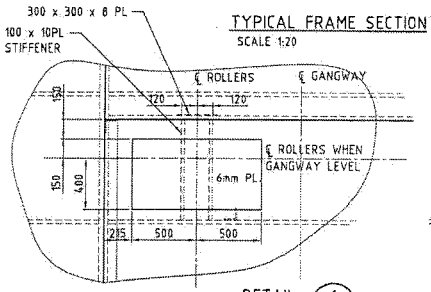

DETAIL 1
1 : 20

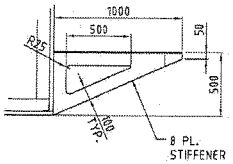

SECTION E
SCALE 1:20

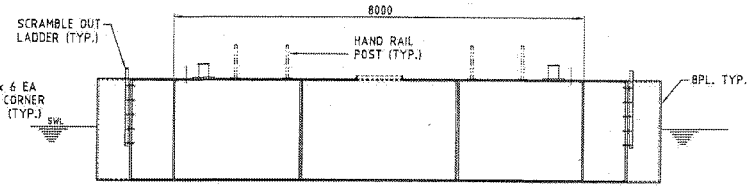

SECTION D
SCALE 1:50

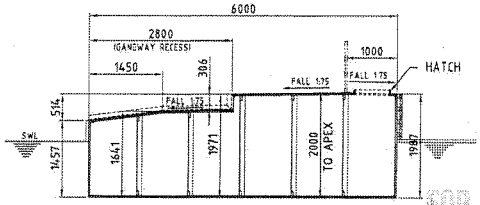

SECTION C
SCALE 1:50

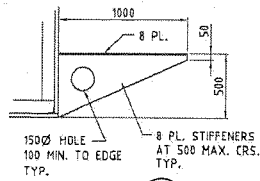

DETAIL 2
1 : 20

FOR INFORMATION ONLY

NOTE

1. FOR NOTES REFER DRG. GE-013

No.	BY	DATE	DESCRIPTION	APPD
D	PJC	12.03.01	GENERAL REVISIONS	
C	JLP	07.03.01	ISSUED FOR CONSTRUCTION	
B	PJC	1.12.00	TENDER - GENERAL REVISIONS	
A	ET	31.10.00	FOR CONSTRUCTION	

Scales

BRISBANE CITY

Abi group

Maunsell McIntyre

COX RAYNER

© COPYRIGHT THIS DRAWING AND DESIGN REMAINS THE PROPERTY OF MAUNSELL MCINTYRE PTY LTD AND MAY NOT BE COPIED WITHOUT PRIOR WRITTEN APPROVAL FROM THIS COMPANY

THE SIGNING OF THIS TITLE BLOCK CONFIRMS THE DESIGN AND DRAFTING OF THIS PROJECT HAVE BEEN PREPARED AND CHECKED IN ACCORDANCE WITH THE MAUNSELL McINTYRE QUALITY ASSURANCE SYSTEM CERTIFIED TO AS/NZS ISO 9001-1994

DESIGNED	MCC	CHECKED	DDL
DRAWN	PJC	CHECKED	DDL
APPROVED	DDL	DATE	7.12.00

Cad ref: W:\ShortTerm\M3071801\3071100_CAD\stage_2\general\GE-011.dwg
Last modified: 20 Jan 11 - 11:39

Project Title: BRISBANE FERRY TERMINALS – CONTRACT No. K57/99/2001

Drawing Title: STANDARD DRAWINGS - ENGINEERING PONTOON SHEET 1 OF 3

Status: FOR CONSTRUCTION

Drg No.: GE-011

No: D

BGC133.0076

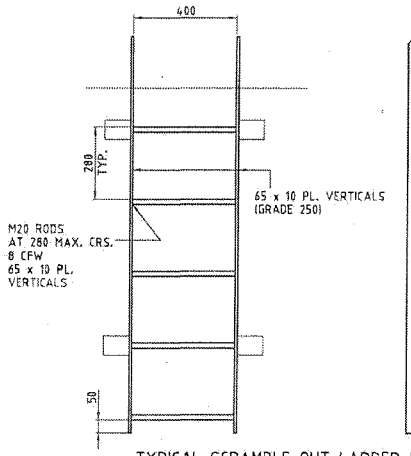

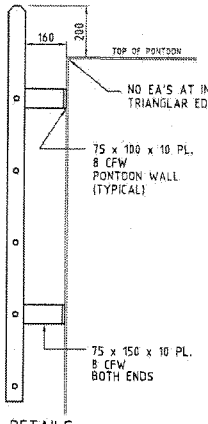

TYPICAL SCRAMBLE OUT LADDER DETAILS
SCALE 1:10

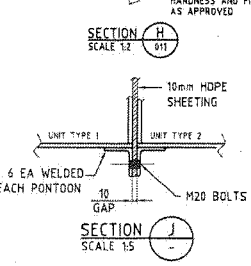

SECTION H
SCALE 1:2

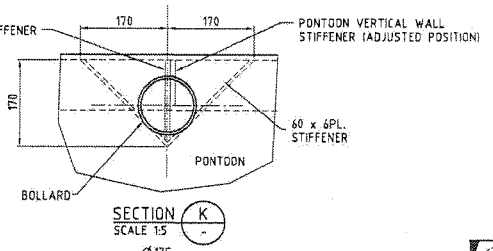

SECTION K
SCALE 1:5

SECTION J
SCALE 1:5

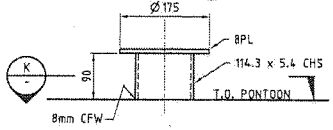

TYPICAL BOLLARD DETAIL
SCALE 1:5

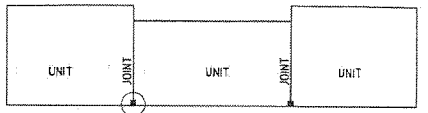

LOWER CATCH DETAIL AT JOINTS EACH SIDE OF UNITS TYP.

ELEVATION
1:50

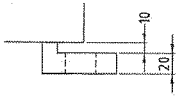

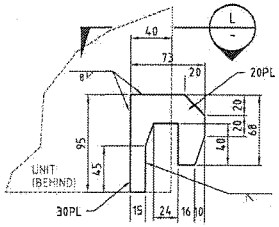

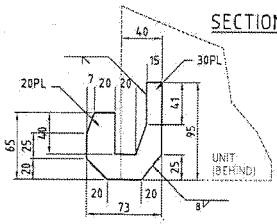

TYPICAL LOWER CATCH DETAIL SCALE 1:2.5

EACH CATCH COMPONENT TO ALIGN WITH 4mm NOMINAL SEPERATION BETWEEN CLASPS AREA

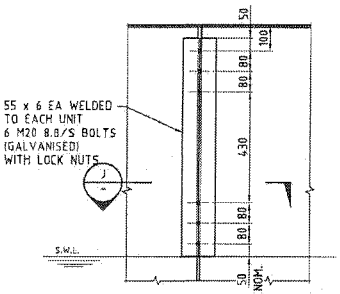

SECTION E
SCALE 1:10

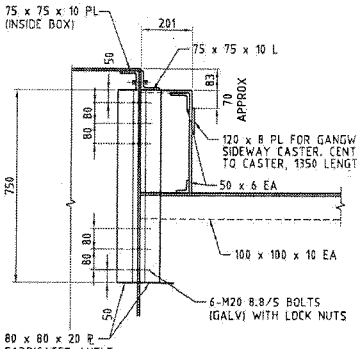

SECTION F
SCALE 1:10

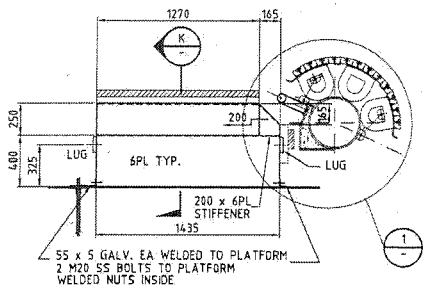

BOARDING PLATFORM DETAILS
1:20

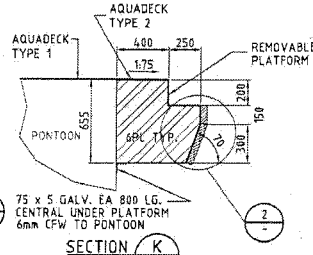

SECTION K
SCALE 1:20

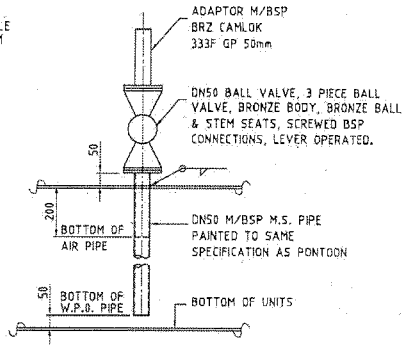

WATER PUMP OUT/AIR EXCHANGE SIMILAR
1:10

NOTE: SEAL AND CAGE OFF STATIONS AS APPROVED

FOR INFORMATION ONLY

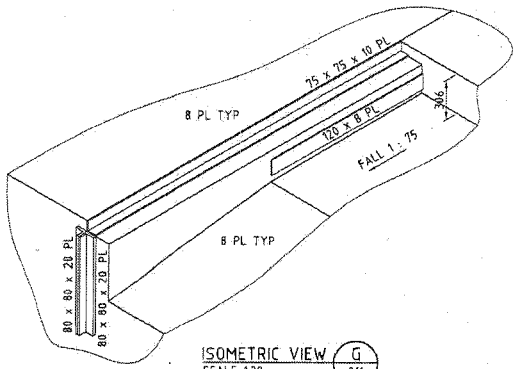

ISOMETRIC VIEW G
SCALE 1:20

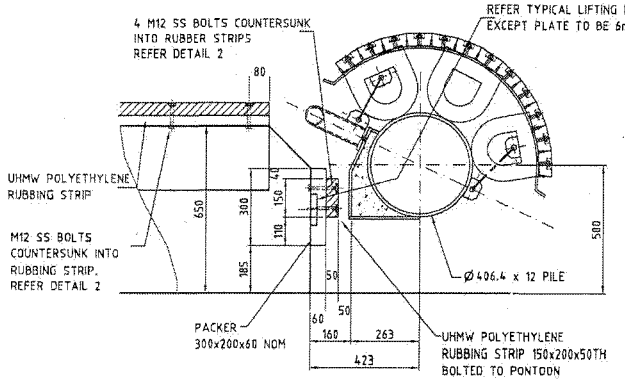

DETAIL 1
1:10

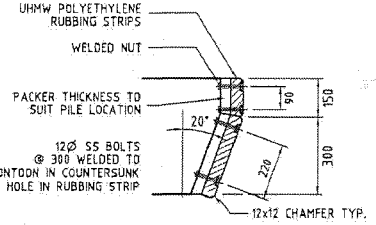

DETAIL 2
1:10

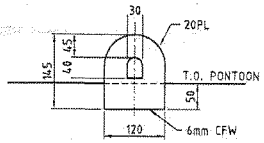

TYPICAL LIFTING LUG DETAIL
SCALE 1:5 (4 PER UNIT)

NOTE

1. FOR NOTES REFER DRG. GE-013

© COPYRIGHT THIS DRAWING AND DESIGN REMAINS THE PROPERTY OF MAUNSELL MCINTYRE PTY LTD AND MAY NOT BE COPIED WITHOUT PRIOR WRITTEN APPROVAL FROM THIS COMPANY

No.	BY	DATE	DESCRIPTION	APPD
C	JLP	07.03.01	ISSUED FOR CONSTRUCTION	
B	PJC	1.12.00	TENDER - GENERAL REVISIONS	
A	ET	31.10.00	FOR CONSTRUCTION	

Scales

BRISBANE CITY

Abi group

Maunsell McIntyre

COX RAYNER

THE SIGNING OF THIS TITLE BLOCK CONFIRMS THE DESIGN AND DRAFTING OF THIS PROJECT HAVE BEEN PREPARED AND CHECKED IN ACCORDANCE WITH THE MAUNSELL MCINTYRE QUALITY ASSURANCE SYSTEM CERTIFIED TO AS/NZS ISO 9001-1994

DESIGNED	MCC	CHECKED	DDL
DRAWN	PJC	CHECKED	DDL
APPROVED	DDL	DATE	7.12.00

Cad ref: W:\ShortTerm\10307100\10307100_CAD\stage_2\general\GE-012.dwg
Last modified: 26 Jan 11 - 13:39

Project Title: BRISBANE FERRY TERMINALS – CONTRACT No. K57/99/2001

Drawing Title: STANDARD DRAWINGS - ENGINEERING PONTOON SHEET 2 OF 3

Status: FOR CONSTRUCTION

Drg No.: GE-012

Rev: C

BCC.133.0077

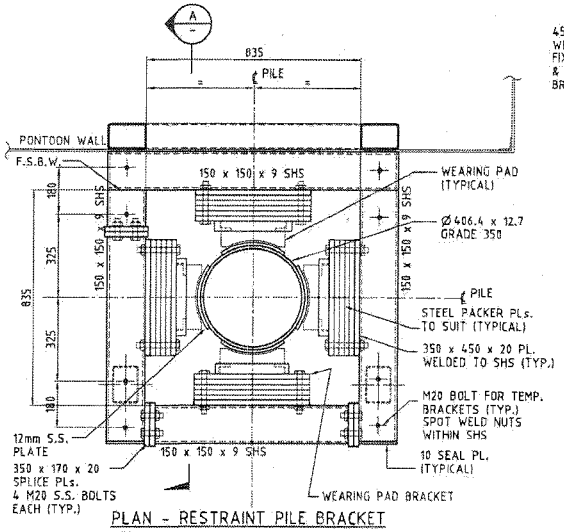

PLAN - RESTRAINT PILE BRACKET
SCALE 1 : 10
(2 OR 4 PER PONTON)

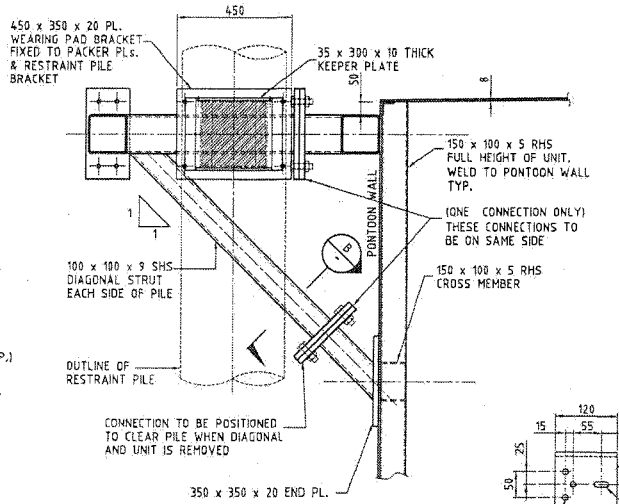

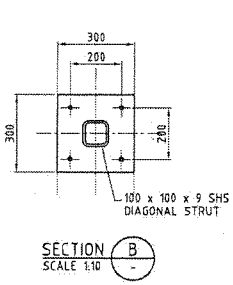

SECTION B
SCALE 1:10

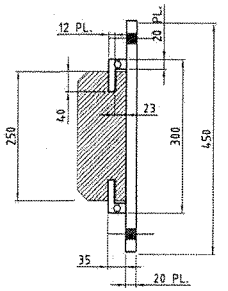

TYP. SECTION - WEARING PAD
SCALE 1:5

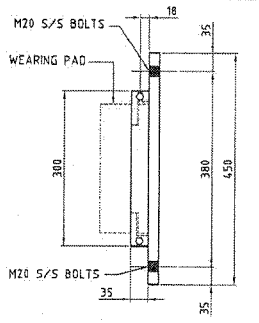

PLAN - TOP KEEPER PLATE
SCALE 1:5

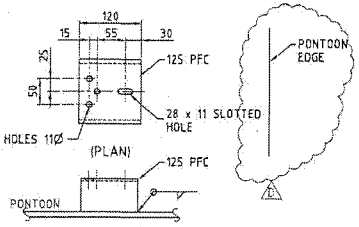

"WINCH DOWN UNDER" MOUNTING PLATE DETAIL
SCALE 1:5

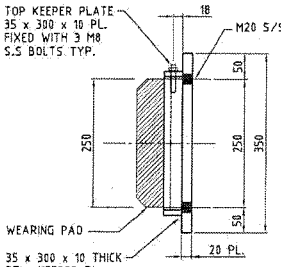

WEARING PAD END ELEVATION
SCALE 1:5

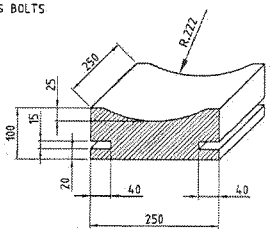

WEARING PAD UHMW POLYETHYLENE "TIVAR" BY CADILLAC PLASTICS
SCALE 1:5

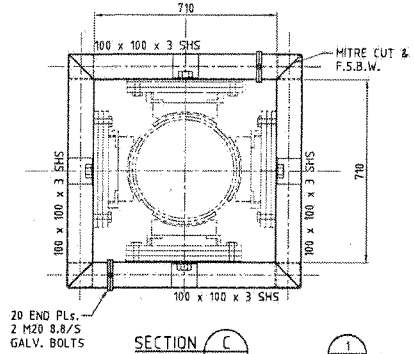

SECTION A
SCALE 1:10

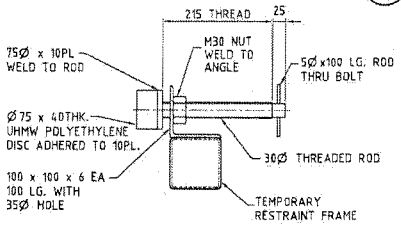

SECTION C
SCALE 1:10

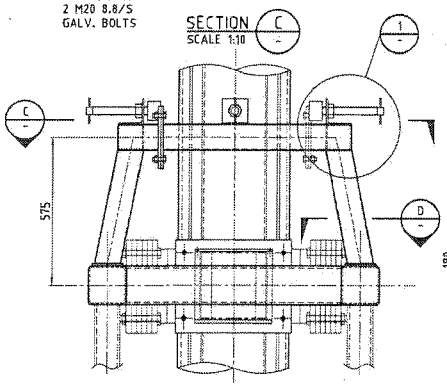

TEMPORARY RESTRAINT BRACKET
SCALE 1 : 10

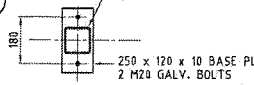

SECTION D
SCALE 1:10

DETAIL 1
1:5

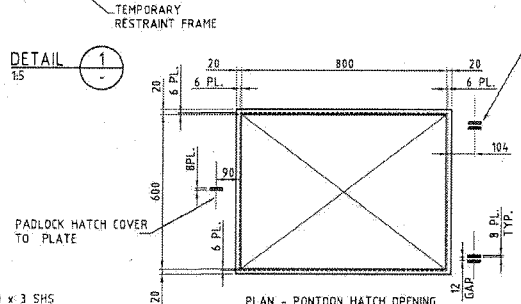

PLAN - PONTOON HATCH OPENING

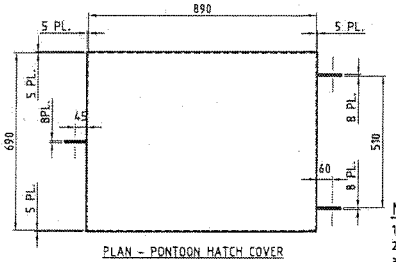

PLAN - PONTOON HATCH COVER

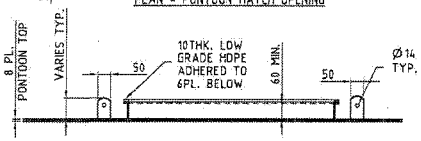

SECTION - PONTOON HATCH OPENING



SECTION - PONTOON HATCH COVER

HATCH OPENING & COVER DETAILS
SCALE 1 : 10

FOR INFORMATION ONLY

NOTES:

1. REFER DRG. G-003/004 FOR GENERAL NOTES
2. ALL WELDS TO BE 10mm CONTINUOUS FILLET WELDS U.N.O.
3. PONTOON TO CARRY A NOMINAL 33.000kg OF CONCRETE BALLAST TO RESULT IN A PONTOON FREEBOARD OF 900mm ALONG THE LINE X-X (REFER PONTOON PLAN GE-011). REFER SPECIFICATION FOR BALLAST DISTRIBUTION. ACTUAL BALLAST WEIGHT TO BE DETERMINED ON SITE.
4. A NOTICE SHOULD BE PAINTED ON THE TOP OF HATCH COVER 'CAUTION - AIR INSIDE MAY BE FOUL. TEST AIR BEFORE ENTRY'
5. ALL CORNERS AND EDGES SHALL BE GROUND SMOOTH TO REMOVE SHARP EDGES AND SCALE.
6. ALL WELD SPLATTER SHALL BE REMOVED PRIOR TO GRIT BLASTING.
7. PONTOON FIRE STATION TO BE THE 'MARINE TECHNOLOGIES FIRE STATION' OR EQUAL. CONTACT Ph: 07-55961900, E-MAIL: mftech@onthenet.com.au
8. McDOWELL ENGINEERING MANUFACTURES THE 'WINCHES DOWN UNDER' RANGE OF WINCHES Ph: 07-38813562, FAX 07-38813567. CONFIRM MOUNTING BASE PLATE LOCATION SUITS WINCH GEOMETRY.

© COPYRIGHT THIS DRAWING AND DESIGN REMAINS THE PROPERTY OF MAUNSELL McINTYRE PTY LTD AND MAY NOT BE COPIED WITHOUT PRIOR WRITTEN APPROVAL FROM THIS COMPANY

No.	BY	DATE	DESCRIPTION	APPD
D	PJC	12.03.01	GENERAL REVISIONS	
C	JLP	07.03.01	ISSUED FOR CONSTRUCTION	
B	PJC	1.12.00	TENDER - GENERAL REVISIONS	
A	KT	31.10.00	FOR CONSTRUCTION	

Scales

BRISBANE CITY

Abi group

Maunsell McIntyre
COX RAYNER

THE SIGNING OF THIS TITLE BLOCK CONFIRMS THE DESIGN AND DRAFTING OF THIS PROJECT HAVE BEEN PREPARED AND CHECKED IN ACCORDANCE WITH THE MAUNSELL McINTYRE QUALITY ASSURANCE SYSTEM CERTIFIED TO AS/NZS ISO 9000-1994

DESIGNED	MCC	CHECKED	DDL
DRAWN	PJC	CHECKED	DDL
APPROVED	DDL	DATE	7.12.00

Cad ref: W:\ShortTerm\10307100\10307100_CAD\stage_2\general\GE-013.dwg
Last modified: 20 Jan 11 - 11:39

Project Title: BRISBANE FERRY TERMINALS - CONTRACT No. K57/99/2001

Drawing Title: STANDARD DRAWINGS - ENGINEERING
PONTOON
SHEET 3 OF 3

Status: FOR CONSTRUCTION

Drg No.: GE-013

No.: D

BGC.133.0078

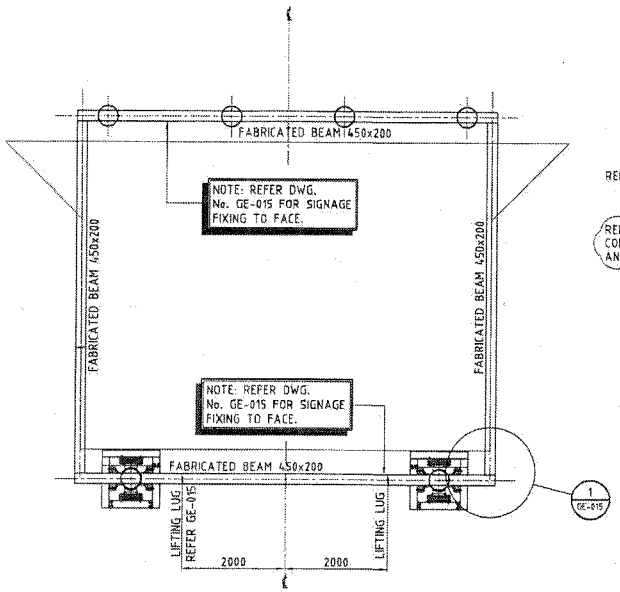

PONTOON FRAME PLAN
1:50

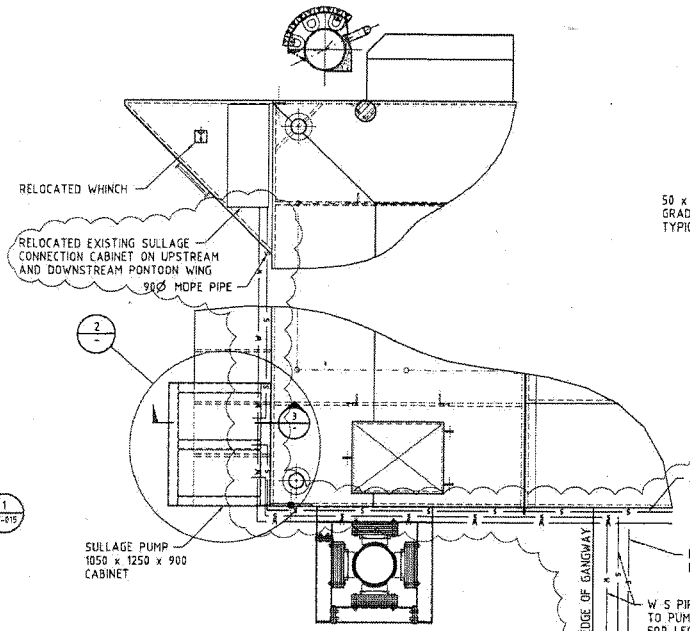

SULLAGE PUMP DETAIL 1
(HOLMAN ST ONLY)

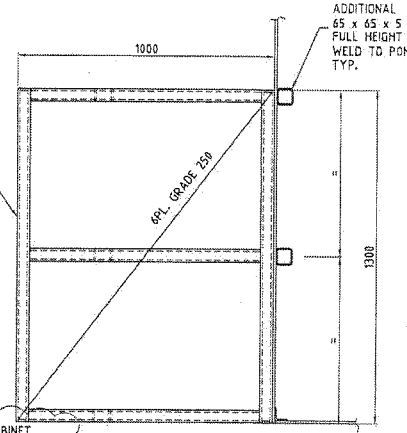

SULLAGE PUMP SUPPORT DETAIL 2

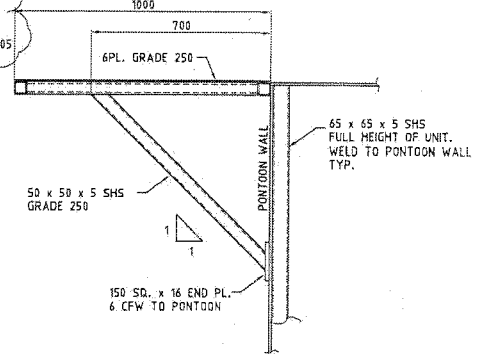

SECTION 3
SCALE

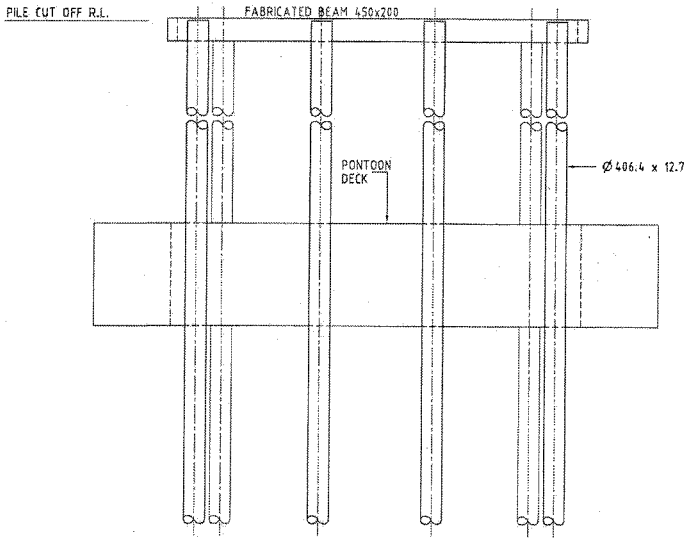

FRONT ELEVATION
1:50

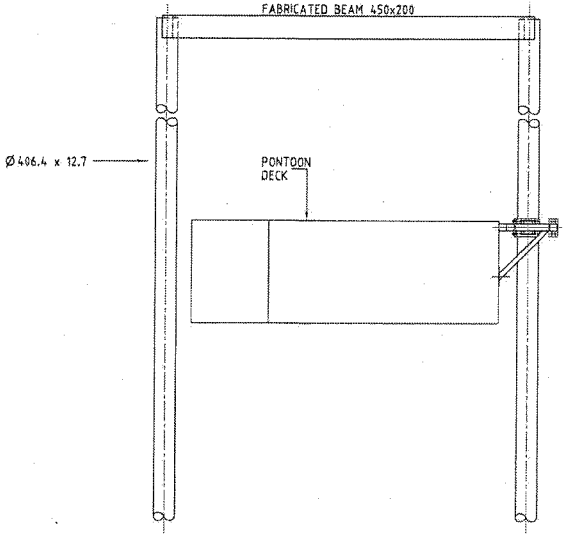

SIDE ELEVATION
1:50

FOR INFORMATION ONLY

NOTE

1. REFER PILING SETOUT DRAWINGS FOR PILE CUT-OFF R.L.

© COPYRIGHT THIS DRAWING AND DESIGN REMAINS THE PROPERTY OF MAUNSELL MCINTYRE PTY LTD AND MAY NOT BE COPIED WITHOUT PRIOR WRITTEN APPROVAL FROM THIS COMPANY

No.	BY	DATE	DESCRIPTION	APPD
D	PJC	13.03.01	GENERAL REVISIONS	
C	AP	01.03.01	ISSUED FOR CONSTRUCTION	
B	PJC	1.12.00	TENDER - GENERAL REVISIONS	
A	ET	31.10.00	FOR CONSTRUCTION	

Scales
500 0 1000 2000mm
1 : 50 FULL SIZE A1

BRISBANE CITY

Abigroup

Maunsell McIntyre
COX
COX RAYNER

THE SIGNING OF THIS TITLE BLOCK CONFIRMS THE DESIGN AND DRAFTING OF THIS PROJECT HAVE BEEN PREPARED AND CHECKED IN ACCORDANCE WITH THE MAUNSELL MCINTYRE QUALITY ASSURANCE SYSTEM CERTIFIED TO AS/NZS ISO 9001-1994

DESIGNED	MCC	CHECKED	DDL
DRAWN	PJC	CHECKED	DDL
APPROVED	DDL	DATE	7.12.00

Cad ref: W:\Short Term\10307100\10307100_CAD\alage_2\general\GE-014.dwg
Last modified: 26 Jan 11 - 11:39

Project Title: BRISBANE FERRY TERMINALS – CONTRACT No. K57/99/2001

Drawing Title: STANDARD DRAWINGS - ENGINEERING
PONTOON FRAMING LAYOUT

Status: FOR CONSTRUCTION

Drg No.: GE-014

Rev: D

BCC.133.0079

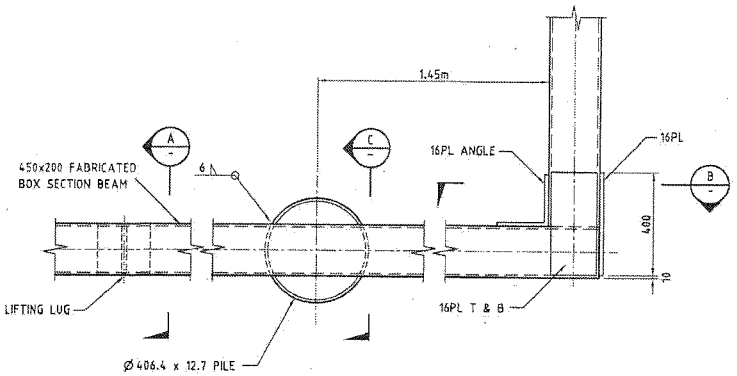

DETAIL 1 (GE-014)
1:10

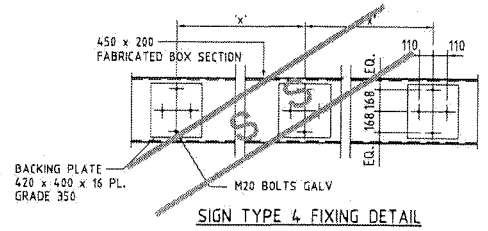

SIGN TYPE 4 FIXING DETAIL
TO FACES OF PONTOON FRAME (NOMINAL)
1:20

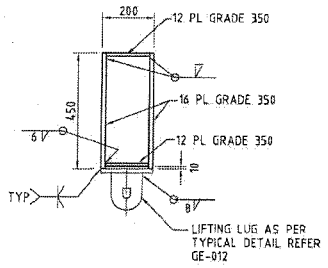

SECTION A
1:10

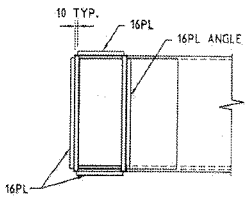

SECTION B
1:10

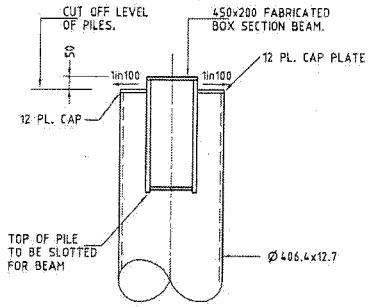

SECTION C
1:10

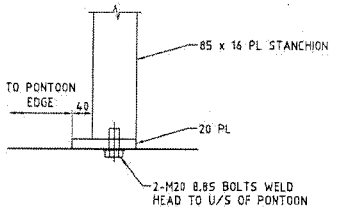

HANDRAIL BASE FIXING
1 : 5

FOR INFORMATION ONLY

NOTES
1. PACKERS TO BE HARDWOOD OR STEEL SHIMS.
2. ALL WELDS TO BE FULL STRENGTH BUTT WELDS TYP. U.N.O.
3. ALL HOLLOW SECTIONS TO BE SEAL WELDED

© COPYRIGHT THIS DRAWING AND DESIGN REMAINS THE PROPERTY OF MAUNSELL MCINTYRE PTY LTD AND MAY NOT BE COPIED WITHOUT PRIOR WRITTEN APPROVAL FROM THIS COMPANY

No.	BY	DATE	DESCRIPTION	APPD
D	PJC	13.03.01	GENERAL REVISIONS	
C	AP	07.03.01	ISSUED FOR CONSTRUCTION	
B	PJC	1.12.00	TENDER - GENERAL REVISIONS	
A	ET	31.10.00	FOR CONSTRUCTION	

Scales

Maunsell McIntyre
COX RAYNER

THE SIGNING OF THIS TITLE BLOCK CONFIRMS THE DESIGN AND DRAFTING OF THIS PROJECT HAVE BEEN PREPARED AND CHECKED IN ACCORDANCE WITH THE MAUNSELL MCINTYRE QUALITY ASSURANCE SYSTEM CERTIFIED TO AS/NZS ISO 9001-1994

DESIGNED	MCC	CHECKED	DDL
DRAWN	PJC	CHECKED	DDL
APPROVED	DDL	DATE	7.12.00

Cad ref: M:\ShortTerm\10307100\10307100_CAD\stage_2\general\GE-015.dwg
Last modified: 29 Jan 11 - 11:39

Project Title: BRISBANE FERRY TERMINALS – CONTRACT No. K57/99/2001

Drawing Title: STANDARD DRAWINGS - ENGINEERING
PONTOON FRAMING DETAILS

Status: FOR CONSTRUCTION

Drg No.: GE-015

Rev: D

DOC.133.0080

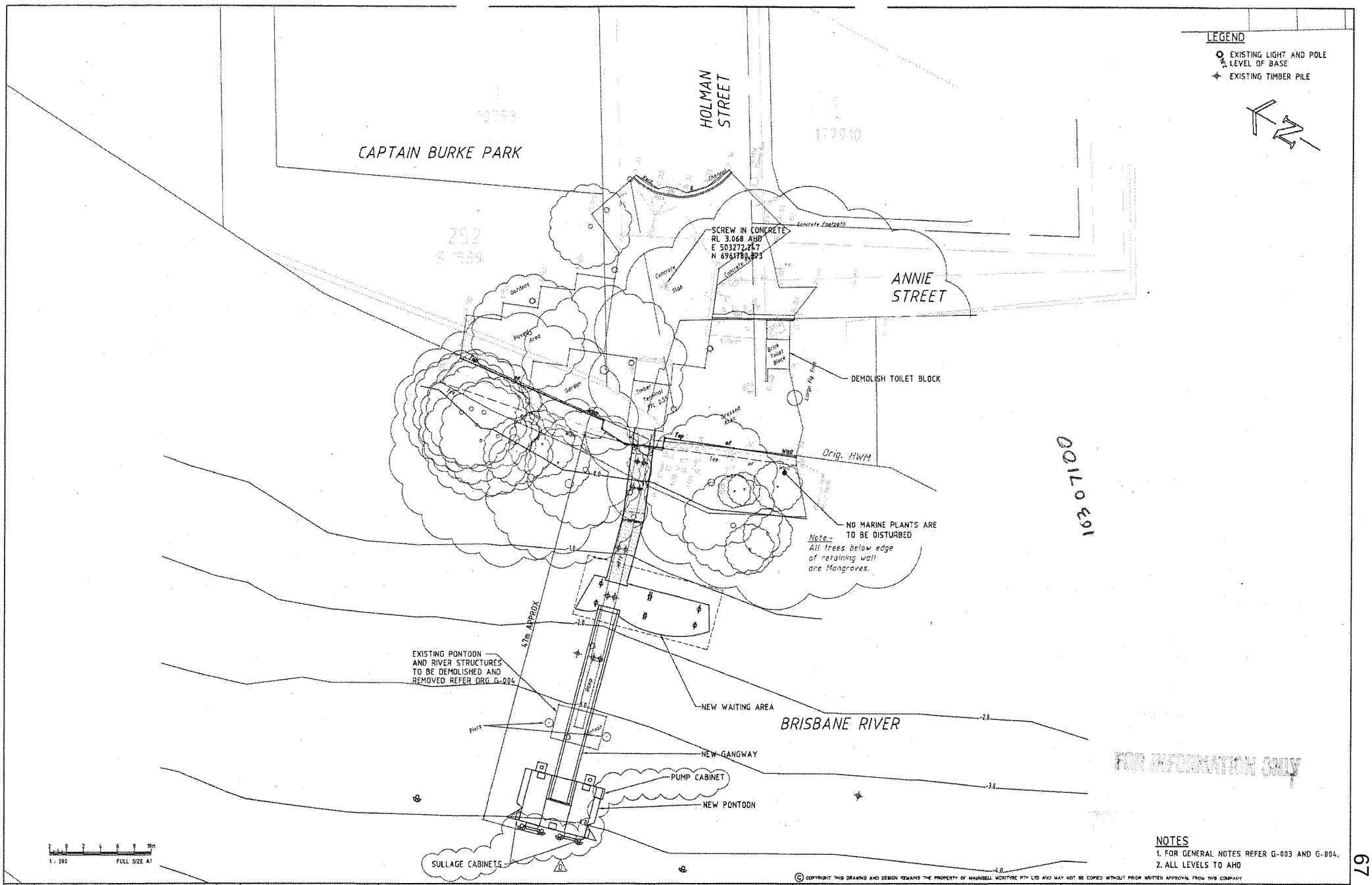

NOTES
1. FOR GENERAL NOTES REFER G-003 AND G-004.
2. ALL LEVELS TO AHD

© COPYRIGHT THIS DRAWING AND DESIGN REMAINS THE PROPERTY OF MAUNSELL MCINTYRE PTY LTD AND MAY NOT BE COPIED WITHOUT PRIOR WRITTEN APPROVAL FROM THIS COMPANY

No.	BY	DATE	DESCRIPTION	APPD
D	PJC	13.03.01	GENERAL REVISIONS	
C	JLP	07.03.01	ISSUED FOR CONSTRUCTION	
B	PJC	1.12.00	TENDER - GENERAL REVISIONS	
A	PJC	31.10.00	FOR CONSTRUCTION	

Scales

BRISBANE CITY

Abi group

Maunsell McIntyre

COX RAYNER

THE SIGNING OF THIS TITLE BLOCK CONFIRMS THE DESIGN AND DRAFTING OF THIS PROJECT HAVE BEEN PREPARED AND CHECKED IN ACCORDANCE WITH THE MAUNSELL MCINTYRE QUALITY ASSURANCE SYSTEM CERTIFIED TO AS/NZS ISO 9001-1994

DESIGNED	MCC	CHECKED	DDL
DRAWN	PJC	CHECKED	DDL
APPROVED	DDL	DATE	7.12.00

Cad ref: W:\Short Term\10307100\10307100_CAD\stage_2\holman\PE5-001.dwg
Last modified: 20 Jan 11 - 11:13

Project Title: BRISBANE FERRY TERMINALS – CONTRACT No. K57/99/2001

Drawing Title: HOLMAN STREET - PROJECT 5 GENERAL ARRANGEMENT

Status: FOR CONSTRUCTION

Drg No.: PE5-001

Rev: D

BCC.133.0081

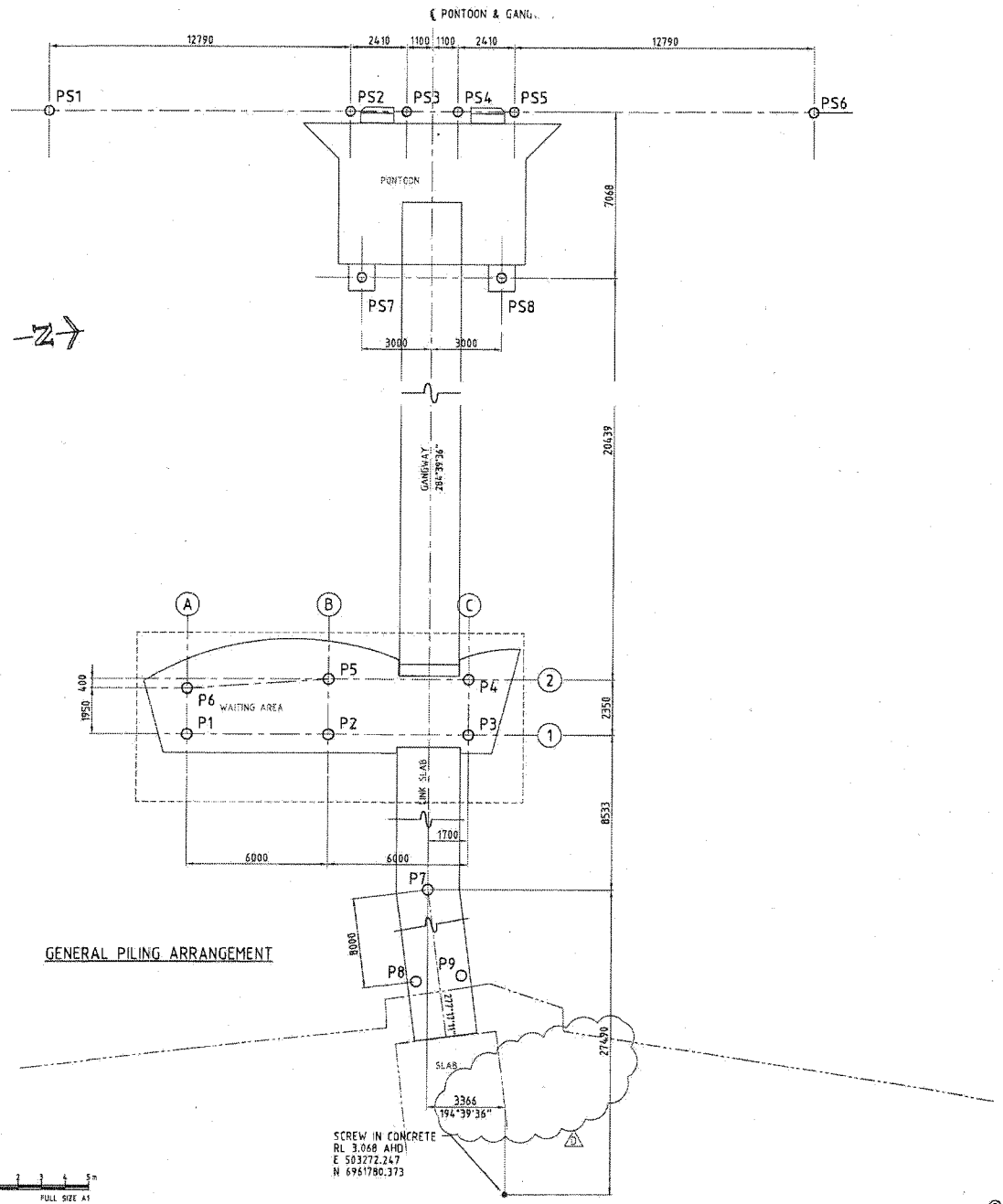

GENERAL PILING ARRANGEMENT

STEEL PILING SCHEDULE - WAITING AREA

PILE SCHEDULE
ALL LEVELS GIVEN IN METRES TO A.H.D.

MARK	PILE SIZE - GRADE (MPa)	CUT-OFF LEVEL	GROUND OR BED LEVEL	ESTIMATED LEVEL LEVEL	MINIMUM TOE LEVEL	ULTIMATE CAPACITY (REFER NOTE 3) kN
P1	Ø457 x 12.7 GRADE 350	1.500	-1.3	-26.0	-15.0	900
P2	Ø457 x 12.7 GRADE 350	1.500	-1.3	-26.0	-15.0	900
P3	Ø457 x 12.7 GRADE 350	1.500	-1.3	-26.0	-15.0	900
P4	Ø457 x 12.7 GRADE 350	1.500	-1.5	-26.0	-15.0	900
P5	Ø457 x 12.7 GRADE 350	1.500	-1.5	-26.0	-15.0	900
P6	Ø457 x 12.7 GRADE 350	1.500	-1.5	-26.0	-15.0	900
P7	Ø610 x 12.7 GRADE 250	1.450	-0.5	-26.0	-	750
P8	Ø457 x 12.7 GRADE 350	1.747	1.0	-18.0	-	400
P9	Ø457 x 12.7 GRADE 350	1.747	1.0	-18.0	-	400

STEEL PILING SCHEDULE - PONTOON

- REFER DRAWING GE-011 FOR STEEL PILE DETAILS

PILE SCHEDULE
ALL LEVELS GIVEN IN METRES TO A.H.D.

MARK	PILE TYPE	CUT-OFF LEVEL	GROUND OR BED LEVEL	MINIMUM TOE LEVEL
PS1	A	4.0	-3.8	-19.0
PS2	B1	8.0	-3.4	-19.0
PS3	B2	8.0	-3.4	-19.0
PS4	B1	8.0	-3.4	-19.0
PS5	B2	8.0	-3.4	-19.0
PS6	D2	4.0	-3.0	-19.0
PS7	C	8.0	-3.4	-19.0
PS8	C	8.0	-3.4	-19.0

FOR INFORMATION ONLY

NOTES

1. TOE LEVELS ARE ESTIMATED ONLY FROM AVAILABLE GEOTECHNICAL INFORMATION.
2. "ULTIMATE PILE CAPACITY" IN THE TABLES HAS BEEN SPECIFIED IN ACCORDANCE WITH AS2159-1995 AND CORRESPONDS TO THE MINIMUM TEST VALUE TO BE ACHIEVED BY HILEY CALCULATION. A REDUCTION FACTOR OF 0.5 HAS BEEN INCORPORATED.
3. THE STEEL PILES ARE TO BE INSTALLED TO THE "MINIMUM TOE LEVEL" AS SHOWN ON THE DRAWINGS TO ACHIEVE LATERAL CAPACITY. IF UNABLE TO ACHIEVE, PREDRIVE OR ROCK SOCKET MINIMUM 2 DIA INTO DISTINCTLY WEATHERED OR BETTER ROCK.
4. GROUND OR BED LEVELS INFERRED FROM SURVEY DATA.

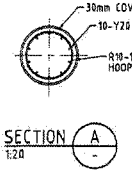

SECTION A
1:20

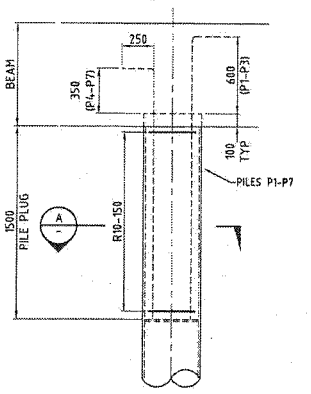

PILE PLUG DETAIL
1:20

© COPYRIGHT THIS DRAWING AND DESIGN REMAINS THE PROPERTY OF MAUNSELL MCINTYRE PTY LTD AND MAY NOT BE COPIED WITHOUT PRIOR WRITTEN APPROVAL FROM THIS COMPANY

No.	BY	DATE	DESCRIPTION	APPD
D	PJC	28.03.01	SETOUT REVISED	
C	JLP	07.03.01	ISSUED FOR CONSTRUCTION	
B	PJC	1.12.00	TENDER - GENERAL REVISIONS	
A	PJC	31.10.00	FOR CONSTRUCTION	

Scales

BRISBANE CITY

Abigroup

Maunsell McIntyre
COX
COX RAYNER

THE SIGNING OF THIS TITLE BLOCK CONFIRMS THE DESIGN AND DRAFTING OF THIS PROJECT HAVE BEEN PREPARED AND CHECKED IN ACCORDANCE WITH THE MAUNSELL MCINTYRE QUALITY ASSURANCE SYSTEM CERTIFIED TO AS/NZS ISO 9001-1994

DESIGNED	MCC	CHECKED	DDL
DRAWN	PJC	CHECKED	DDL
APPROVED	DDL	DATE	7.12.00

Cad ref: W:\ShortTerm\10307101\10307100_CAD\stage_2\holman\PE5-002.dwg
Last modified: 20 Jan 11 - 11:39

Project Title: BRISBANE FERRY TERMINALS – CONTRACT No. K57/99/2001

Drawing Title: HOLMAN STREET - PROJECT 5
PILING SCHEDULE AND SETOUT

Status: FOR CONSTRUCTION

Drg No. PE5-002

Rev D

BCC133.0082

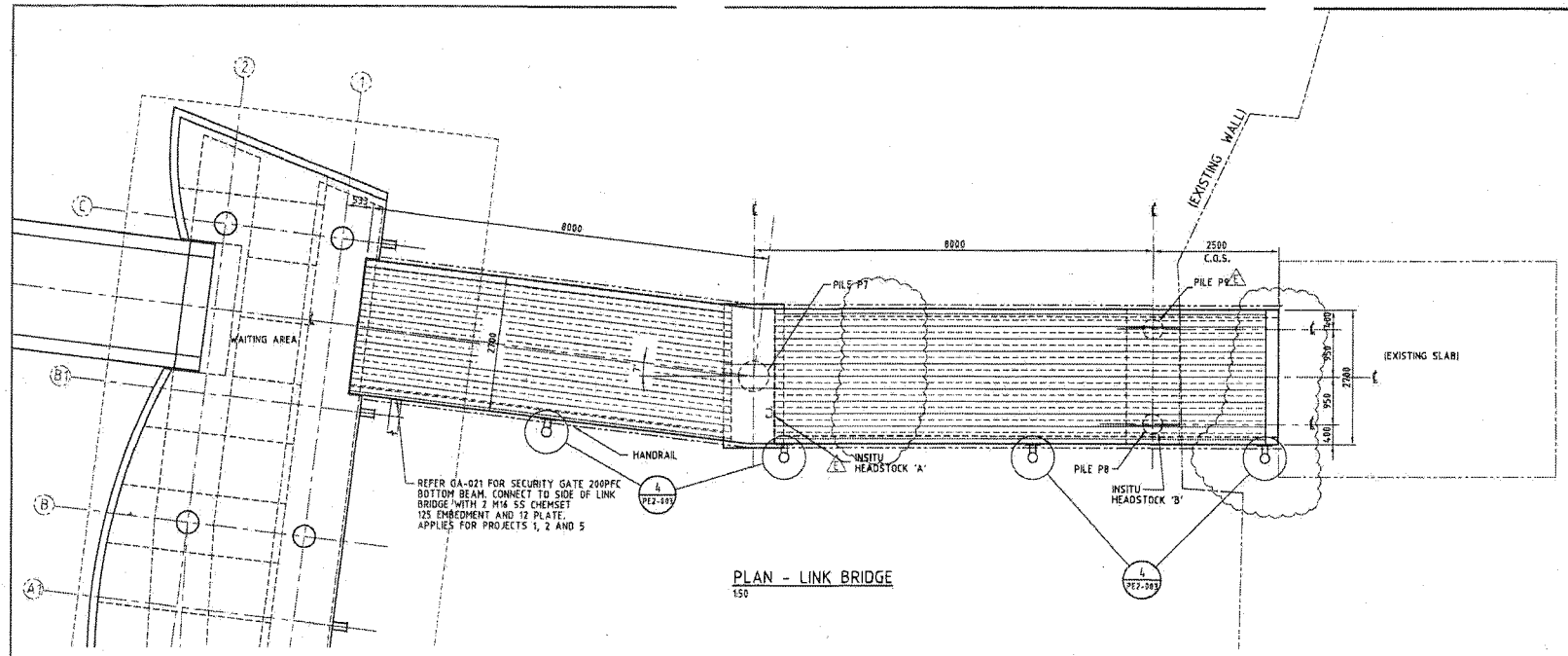

PLAN - LINK BRIDGE
1:50

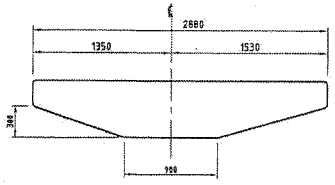

INSITU HEADSTOCK 'A'
1:25

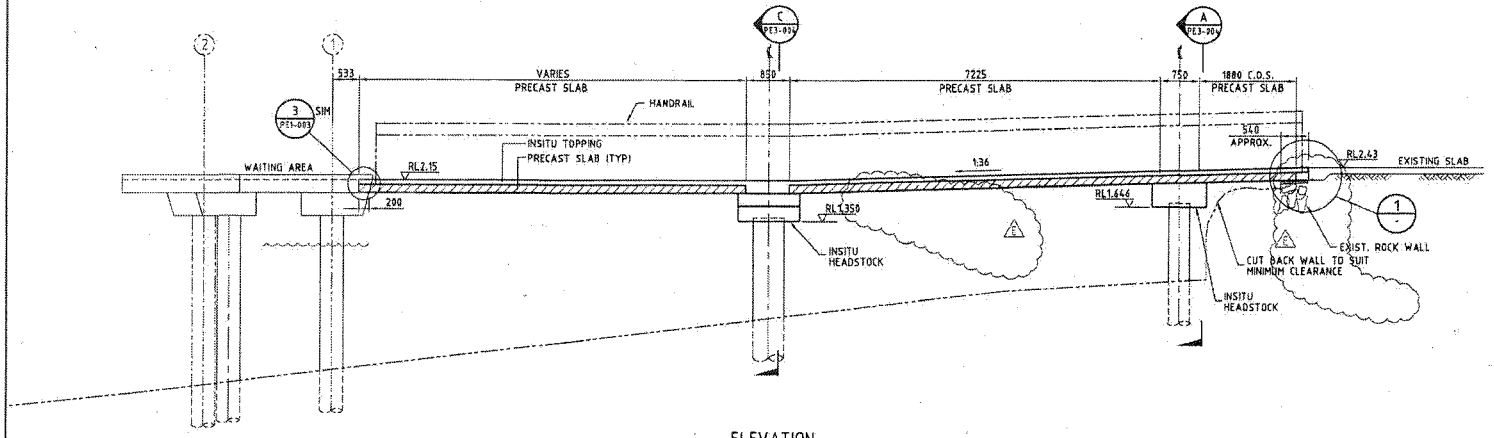

ELEVATION
1:50

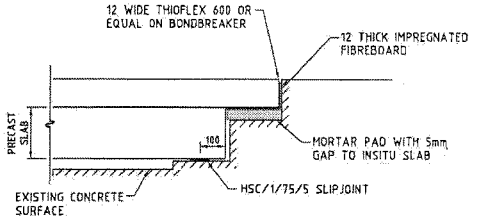

DETAIL 1/-
1 : 10

FOR INFORMATION ONLY

NOTES

1. FOR NOTES REFER PE1-003.
2. C.O.S. - CHECK ON SITE.

© COPYRIGHT THIS DRAWING AND DESIGN REMAINS THE PROPERTY OF MAUNSELL MCINTYRE PTY LTD AND MAY NOT BE COPIED WITHOUT PRIOR WRITTEN APPROVAL FROM THIS COMPANY.

No.	BY	DATE	DESCRIPTION	APPD
E	PJC	19.03.01	PRECAST TO INSITU HEADSTOCK CHANGE	
D	PJC	12.03.01	GENERAL REVISIONS	
C	AP	07.03.01	ISSUED FOR CONSTRUCTION	
B	PJC	1.12.00	TENDER - GENERAL REVISIONS	
A	ET	31.10.00	FOR CONSTRUCTION	

Scales
0.5 0 1 2m
1 : 50 FULL SIZE A1

BRISBANE CITY

Abigroup

Maunsell McIntyre
COX
COX RAYNER

THE SIGNING OF THIS TITLE BLOCK CONFIRMS THE DESIGN AND DRAFTING OF THIS PROJECT HAVE BEEN PREPARED AND CHECKED IN ACCORDANCE WITH THE MAUNSELL McINTYRE QUALITY ASSURANCE SYSTEM CERTIFIED TO AS/NZS ISO 9001-1994

DESIGNED	MCC	CHECKED	DDL
DRAWN	PJC	CHECKED	DDL
APPROVED	DDL	DATE	7.12.00

Cad ref: W:\ShortTerm\10307100\10307100_CAD\stage_2\holman\PE5-003.dwg
Last modified: 20 Jan 11 - 11:39

Project Title: BRISBANE FERRY TERMINALS – CONTRACT No. K57/99/2001
Drawing Title: HOLMAN STREET - PROJECT 5
LINK SLAB
SHEET 1 OF 2
Status: FOR CONSTRUCTION
Drg No.: PE5-003
Rev: F

BCC.133.0083

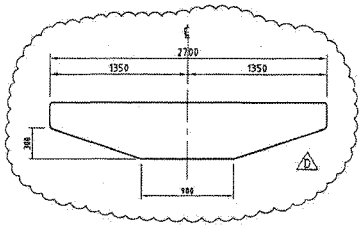

ELEVATION - HEADSTOCK

INSITU HEADSTOCK
1:25

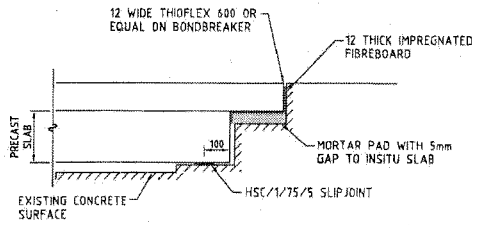

DETAIL 3 (PES-003)
1 : 10

FOR INFORMATION ONLY

© COPYRIGHT THIS DRAWING AND DESIGN REMAINS THE PROPERTY OF MAUNSELL McINTYRE PTY LTD AND MAY NOT BE COPIED WITHOUT PRIOR WRITTEN APPROVAL FROM THIS COMPANY

No.	BY	DATE	DESCRIPTION	APPD
C	JLP	07.03.01	ISSUED FOR CONSTRUCTION	
B	PJC	1.12.00	TENDER - GENERAL REVISIONS	
A	ET	31.10.00	FOR CONSTRUCTION	

Scales
0.5 0 1 2m
1 : 50 FULL SIZE A1

BRISBANE CITY

Abi group

Maunsell McIntyre
COX RAYNER

THE SIGNING OF THIS TITLE BLOCK CONFIRMS THE DESIGN AND DRAFTING OF THIS PROJECT HAVE BEEN PREPARED AND CHECKED IN ACCORDANCE WITH THE MAUNSELL McINTYRE QUALITY ASSURANCE SYSTEM CERTIFIED TO AS/NZS ISO 9001-1994

DESIGNED	CCV	CHECKED	DDL
DRAWN	ET	CHECKED	DDL
APPROVED	DDL	DATE	7.12.00

Cad ref: W:\Short Term\10307108\10307108_CAD\stage_2\holman\PES-004.dwg
Last modified: 20 Jan 11 - 11:39

Project Title: BRISBANE FERRY TERMINALS - CONTRACT No. K57/99/2001
Drawing Title: HOLMAN STREET - PROJECT 5
LINK SLAB
SHEET 2 OF 2
Status: FOR CONSTRUCTION
Drg No.: PES-004
Rev: C

BCC.133.0084

REFER TO DWG. PE5-005 FOR FURTHER DETAILS

LEGEND

- L1 — PHILIPS QL DOWNLIGHT OR EQUIVALENT. MODEL No. KBS 200/085
- L1E (EMERGENCY) — IGUZZINI SISTEMA 44 MODEL No. 8153 OR EQUIVALENT. 2x26W COMPACT FLUORESCENT WITH MAINTAINED EMERGENCY PACK. NOTE - 3 WIRE SYSTEM
- L2 — PHILIPS PAC136V FLUORESCENT OR EQUIVALENT. 36W FLOURESCENT-COOL WHITE LAMP TYPE
- L2E (EMERGENCY) — PHILIPS PAC136VA39 EMERGENCY FLUORESCENT OR EQUIVALENT. 36W FLOURESCENT-COOL WHITE LAMP TYPE. NOTE - 3 WIRE SYSTEM
- L3 — PHILIPS TEMPO MODEL MWF230/150A 150W METAL HALIDE FLOODLIGHT OR EQUIVALENT
- L4 — PHILIPS TEMPO MODEL MWF130/070S 70W METAL HALIDE FLOODLIGHT OR EQUIVALENT
- L5 — BEGA 8071.70 70 WATT METAL HALIDE 4.5 METRE ALUMINIUM POLE MOUNT CUSTOM POWDER COATED TO PROJECT MANAGERS SPECIFICATIONS.
- GPO — WEATHERPROOF IP56 GPO 10A LOCKABLE IN THE "OFF" POSITION
- C — CLOCK
- EP — ELECTRICAL PIT
- CP — COMMUNICATIONS PIT

CONDUIT SCHEDULE

C1	25mmØ COMMS WHITE UPVC HEAVY DUTY TO AUSTEL 008
C2	32mmØ COMMS WHITE UPVC HEAVY DUTY TO AUSTEL 008
C3	63mmØ COMMS WHITE UPVC HEAVY DUTY TO AUSTEL 008
E1	32mmØ ELECTRICAL ORANGE UPVC HEAVY DUTY TO AS2053
E2	40mmØ ELECTRICAL ORANGE UPVC HEAVY DUTY TO AS2053
E3	63mmØ ELECTRICAL ORANGE UPVC HEAVY DUTY TO AS2053
E4	63mmØ ELECTRICAL HEAVY DUTY FLEXIBLE CONDUIT TO AS2053

EXAMPLE
2xC1 DENOTES 2 OFF C1 CONDUITS

LIGHTING CIRCUIT SCHEDULE

CIRCUIT NO.	LIGHT FITTINGS ON RELEVANT CIRCUIT
LC1	LIGHTS L5-1 TO L5-4, L1E-1, L1-8 & L1E-2
LC2	LIGHTS L2E-1 TO L2E-7
LC3	LIGHTS L2E-8, L2E-9, L3-2 & L3-4
LC4	LIGHTS L1-1 TO L1-7 & L1-9
LC5	LIGHTS L2-1 TO L2-15, L4-1
LC6	LIGHTS L3-1, L3-3

LIGHT FITTING NUMBER CODE E.G.
L5-1, WHERE L5 IS THE LIGHT FITTING TYPE AND -1 IS THE FITTING NUMBER ON THE CIRCUIT. REFER TO SINGLE LINE DIAGRAM DRAWING NO. GE-016.

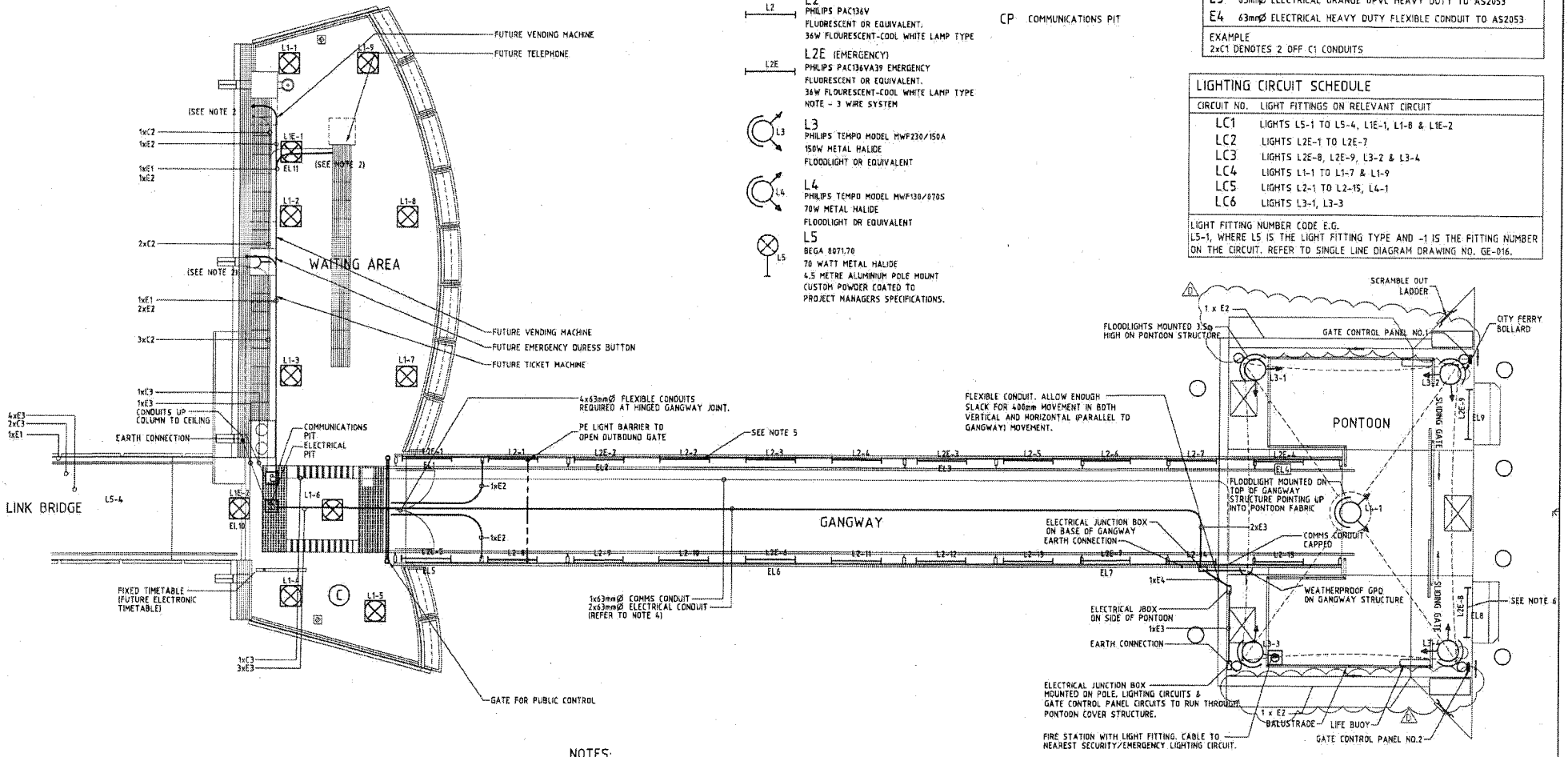

NOTES:

1. EQUIPMENT LOCATIONS ARE INDICATIVE ONLY. FINAL LOCATION OF EQUIPMENT TO BE DETERMINED ON SITE
2. ALL CONDUIT PENETRATIONS (UP THROUGH FLOOR) FOR FUTURE EQUIPMENT TO HAVE SUITABLE WATERPROOF STAINLESS STEEL REMOVABLE COVERS (APPROX. DIM. 100x100mm) FINISHED LEVEL WITH FLOOR.
3. PONTOON SIGNAGE LIGHTING OPTION TO BE FINALISED;
4. CONDUITS ON GANGWAY TO BE INSTALLED BY THE GANGWAY MANUFACTURER. HEAVY DUTY PVC CONDUITS TO BE INSTALLED ON CABLE LADDER, REFER TO DRAWING No. GE-007.
5. FLUORESCENT LIGHT FITTINGS TO BE MOUNTED ON TOP BOX BEAM OF GANGWAY STRUCTURE FACING INWARDS TO WALKWAY.
6. FLUORESCENT LIGHT FITTINGS TO BE MOUNTED ON PONTOON STRUCTURE CROSS BEAM FACING INWARDS TO WALKWAY.

FOR INFORMATION ONLY

MAMIC
MAMIC Pty Ltd
A.C.N. 083 783 242

© COPYRIGHT THIS DRAWING AND DESIGN REMAINS THE PROPERTY OF MAUNSELL MCINTYRE PTY LTD AND MAY NOT BE COPIED WITHOUT PRIOR WRITTEN APPROVAL FROM THIS COMPANY

No.	BY	DATE	DESCRIPTION	APPD
D	PJC	13.03.01	GENERAL REVISIONS	
C	ALP	07.03.01	ISSUED FOR CONSTRUCTION	
B	PJC	1.12.00	TENDER - GENERAL REVISIONS	
A	JMC	31.10.00	FOR CONSTRUCTION	

Scales
0.5 0 0.5 1 1.5 2 2.5m
SCALE 1:50 FULL SIZE A1

BRISBANE CITY

Abi group

Maunsell McIntyre
COX
COX RAYNER

THE SIGNING OF THIS TITLE BLOCK CONFIRMS THE DESIGN AND DRAFTING OF THIS PROJECT HAVE BEEN PREPARED AND CHECKED IN ACCORDANCE WITH THE MAUNSELL McINTYRE QUALITY ASSURANCE SYSTEM CERTIFIED TO AS/NZS ISO 9001-1994

DESIGNED		CHECKED	
DRAWN		CHECKED	
APPRDVED		DATE	

Cad ref: W:\ShortTerm\10307100\10307100_CAD\storage_2\Electrical\PE5-006.dwg
Last modified: 20 Jan 11 - 11:41

Project Title: BRISBANE FERRY TERMINALS – CONTRACT No. K57/99/2001
Drawing Title: HOLMAN STREET - PROJECT 5 LIGHTING AND POWER LAYOUT
Status: FOR CONSTRUCTION
Drg No.: PE5-006
No.: D

BCC133.0085

WATER NOTES

1. SULLAGE AND WATER LINE TO BE PLACED IN A TRENCH IN ACCORDANCE TO THE SPECIFICATION.
2. PIPES SHALL BE MDPE CLASS 12.
3. MINIMUM BENDING RADIUS = 20 x DN SIZE.
4. NO JOINTS SHALL BE USED WHERE THE PIPE IS CAST INTO OR UNDER STRUCTURES OR CONCRETE.
5. MIN COVER TO PIPE UNDER SLAB IS 75mm.

LEGEND

W —— DN25 WATER PIPE

S —— SULLAGE LINE PIPE Ø90mm MDPE

s —— EXISTING SEWER LINE

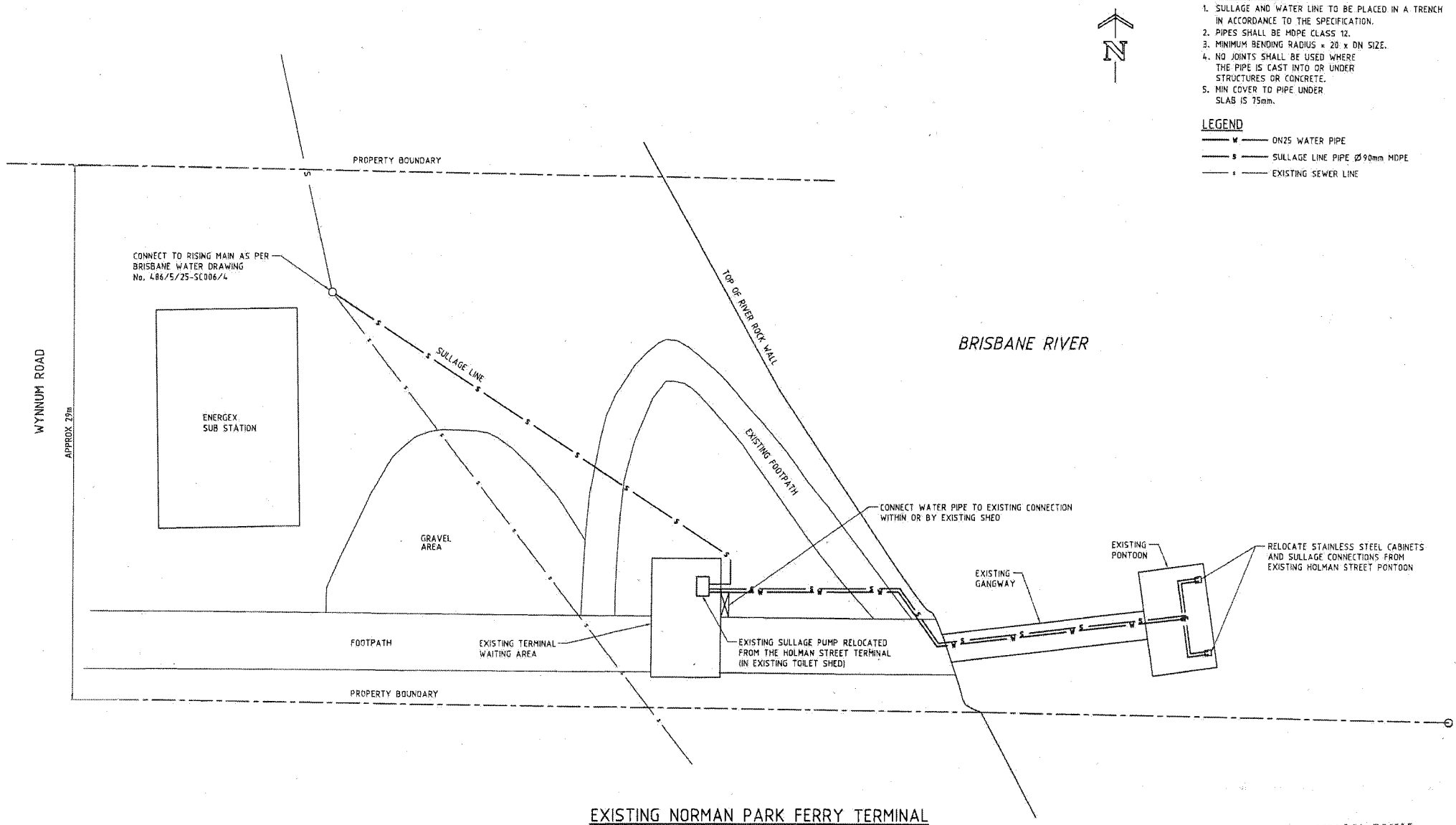

EXISTING NORMAN PARK FERRY TERMINAL

1 : 100

FOR INFORMATION ONLY

© COPYRIGHT THIS DRAWING AND DESIGN REMAINS THE PROPERTY OF MAUNSELL McINTYRE PTY LTD AND MAY NOT BE COPIED WITHOUT PRIOR WRITTEN APPROVAL FROM THIS COMPANY

No.	BY	DATE	DESCRIPTION	APPD
B	JLP	07.03.01	ISSUED FOR CONSTRUCTION	
A	PJC	1.12.00	ISSUE FOR TENDER	

Scales: 1 0 1 2 3 4 5m — 1 : 100 FULL SIZE A1

Maunsell McIntyre — COX RAYNER

THE SIGNING OF THIS TITLE BLOCK CONFIRMS THE DESIGN AND DRAWINGS OF THIS PROJECT HAVE BEEN PREPARED AND CHECKED IN ACCORDANCE WITH THE MAUNSELL McINTYRE QUALITY ASSURANCE SYSTEM CERTIFIED TO AS/NZS ISO 9001-1994

DESIGNED		CHECKED	
DRAWN		CHECKED	
APPROVED		DATE	

Cad ref: W:\ShortTerm\10307100\10307100_CAD\stage_2\holman\PE5-007.dwg
Last modified: 20 Jan 11 - 15:39

Project Title: BRISBANE FERRY TERMINALS – CONTRACT No. K57/99/2001

Drawing Title: NORMAN PARK - PROJECT 5 TEMPORARY SULLAGE CONNECTION

Status: FOR CONSTRUCTION

Drg No.: PE5-007

Rev: B

BCC 133 0086

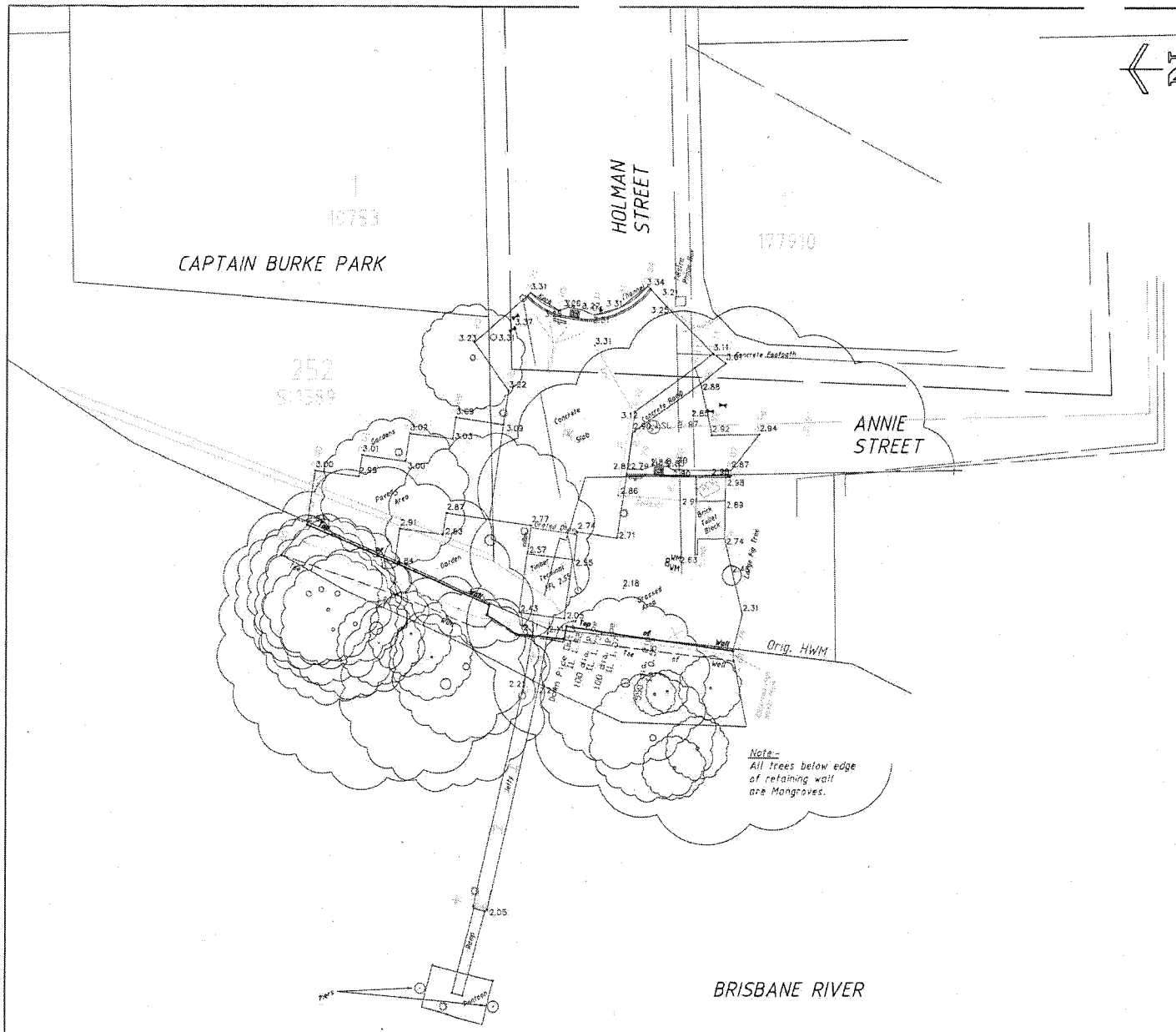

NOTE:

The title boundaries as shown hereon have not been reinstated or remarked at the time of survey and have been determined from deed dimension only derived from SL10966, RP102200, SP113043 and SL6269 in the Department of Natural Resources and their position may not be accurate.

This plan is for design purposes only. Not to be used for construction.

FISHER STEWART PTY LTD should be contacted should field set out be required resulting from works derived from this detail plan.

Services shown hereon have been located, where possible, by field survey. If not able to be located, services have been plotted from search records and notation has been made hereon.

Where such records either do not exist or are inadequate a notation has been made hereon.

Prior to any demolition, excavation or construction on the site, the relevant authority should be contacted for possible location of further underground services and detailed locations of all services.

LEGEND TD SYMBOLS

- BENCH MARK
- PERMANENT MARK
- WATER VALVE
- FIRE HYDRANT
- STORMWATER MANHOLE
- SEWERAGE MANHOLE
- SIGN
- ADVERTISING SIGN
- TRAFFIC LIGHTS
- TRAFFIC SIGNAL PIT
- TRAFFIC SIGNAL CONTROL BOX
- GULLY TRAP
- FIELD GULLY TRAP
- WATER METER
- DRIVEWAY
- GAS VALVE
- ELECTRICITY PILLAR
- ELECTRICITY PIT
- POWER POLE
- STREET LIGHT
- STREET LIGHT/POWER POLE
- TRANSFORMER ON POLE
- TELEPHONE BOX
- TELSTRA PILLAR
- TELSTRA PIT
- SOB SEWER OB/VENT
- RDDP ROOFWATER DOWN PIPE
- CCB COMPUTER CABLE BOX
- STORM WATER
- SEWER MAIN
- GAS MAIN
- WATER MAIN
- COMPUTER CABLES
- TELSTRA CONDUIT
- ELECTRICITY

Level Datum AHD

Any problems associated with the electronic data contained in this CAD file should be reported to:

FISHER STEWART PTY LTD
PO Box 297,
Fortitude Valley, Q 4006
Telephone (07) 3852 1720
Fax (07) 3852 1740
Email: fsbris@fisherstewart.com.au

ELECTRONIC TRANSFER FILES

The electronic data supplied via this CAD file is a copy of a drawing file held in the office of FISHER STEWART PTY LTD at the time & date of transfer.

The information contained within this electronic model should not be reproduced, altered or supplied to a third party in any way without the written permission of FISHER STEWART PTY LTD.

In the event that the electronic data transferred, and/or any attachment or associated document or part thereof, is utilised in any manner whatsoever other than for the specific purposes for which it was prepared, FISHER STEWART PTY LTD will not be liable for such use or any damages of whatever type or extent which may result.

Any reproduction of the electronic data contained in this drawing file must contain this disclaimer.

FOR INFORMATION ONLY

No.	BY	DATE	DESCRIPTION	APPD
B	KP	07.03.01	ISSUED FOR CONSTRUCTION	
A	PJC	1.12.00	FOR CONSTRUCTION	

Scales: 2 0 2 4 6 8 10m — 1 : 200 FULL SIZE A1

Maunsell McIntyre
COX RAYNER

© COPYRIGHT THIS DRAWING AND DESIGN REMAINS THE PROPERTY OF MAUNSELL MCINTYRE PTY LTD AND MAY NOT BE COPIED WITHOUT PRIOR WRITTEN APPROVAL FROM THIS COMPANY

THE SIGNING OF THIS TITLE BLOCK CONFIRMS THE DESIGN AND DRAFTING OF THIS PROJECT HAVE BEEN PREPARED AND CHECKED IN ACCORDANCE WITH THE MAUNSELL McINTYRE QUALITY ASSURANCE SYSTEM CERTIFIED TO AS/NZS ISO 9001-1994

DESIGNED	MCC	CHECKED	DDL
DRAWN	PJC	CHECKED	DDL
APPROVED	DDL	DATE	7.12.00

Cad ref: W:\ShortTerm\10307198\10307198_CAD\stage_2\holman\PES-808.dwg
Last modified: 20 Jan 11 - 15:39

Project Title: BRISBANE FERRY TERMINALS – CONTRACT No. K57/99/2001

Drawing Title: HOLMAN STREET - PROJECT 5 SURVEY PLAN

Status: FOR CONSTRUCTION | Drg No. PES-008 | Rev B

BCC133.0087

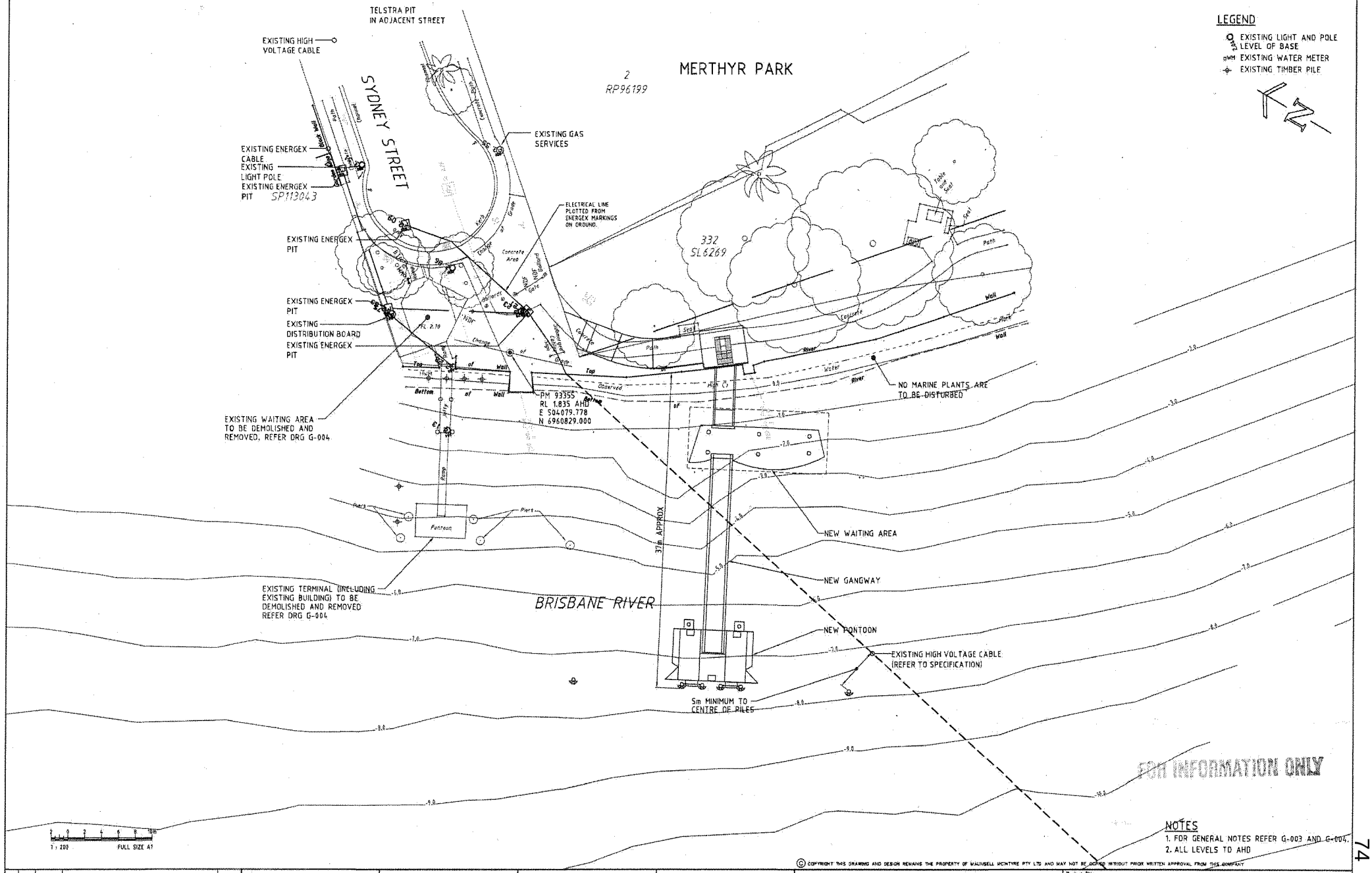

No.	BY	DATE	DESCRIPTION	APPD
C	JLP	07.03.01	ISSUED FOR CONSTRUCTION	
B	PJC	1.12.00	TENDER - GENERAL REVISIONS	
A	PJC	31.10.00	FOR CONSTRUCTION	

Scales

BRISBANE CITY

Abi group

Maunsell McIntyre

COX RAYNER

© COPYRIGHT THIS DRAWING AND DESIGN REMAINS THE PROPERTY OF MAUNSELL MCINTYRE PTY LTD AND MAY NOT BE COPIED WITHOUT PRIOR WRITTEN APPROVAL FROM THIS COMPANY

THE SIGNING OF THIS TITLE BLOCK CONFIRMS THE DESIGN AND DRAFTING OF THIS PROJECT HAVE BEEN PREPARED AND CHECKED IN ACCORDANCE WITH THE MAUNSELL MCINTYRE QUALITY ASSURANCE SYSTEM CERTIFIED TO AS/NZS ISO 9001-1994

DESIGNED	MEC	CHECKED	DDL
DRAWN	PJC	CHECKED	DDL
APPROVED	DDL	DATE	7.12.00

Cad ref: W:\Short Term\10307100\10307100_CAD\stage_1\sydney-st\PE2-001.dwg
Last modified: 20 Jan 11 - 11:59

Project Title: BRISBANE FERRY TERMINALS – CONTRACT No. K57/99/2001

Drawing Title: SYDNEY STREET - PROJECT 2
GENERAL ARRANGEMENT

Status: FOR CONSTRUCTION

Drg No.: PE2-001

Rev: C

BCC.133.0088

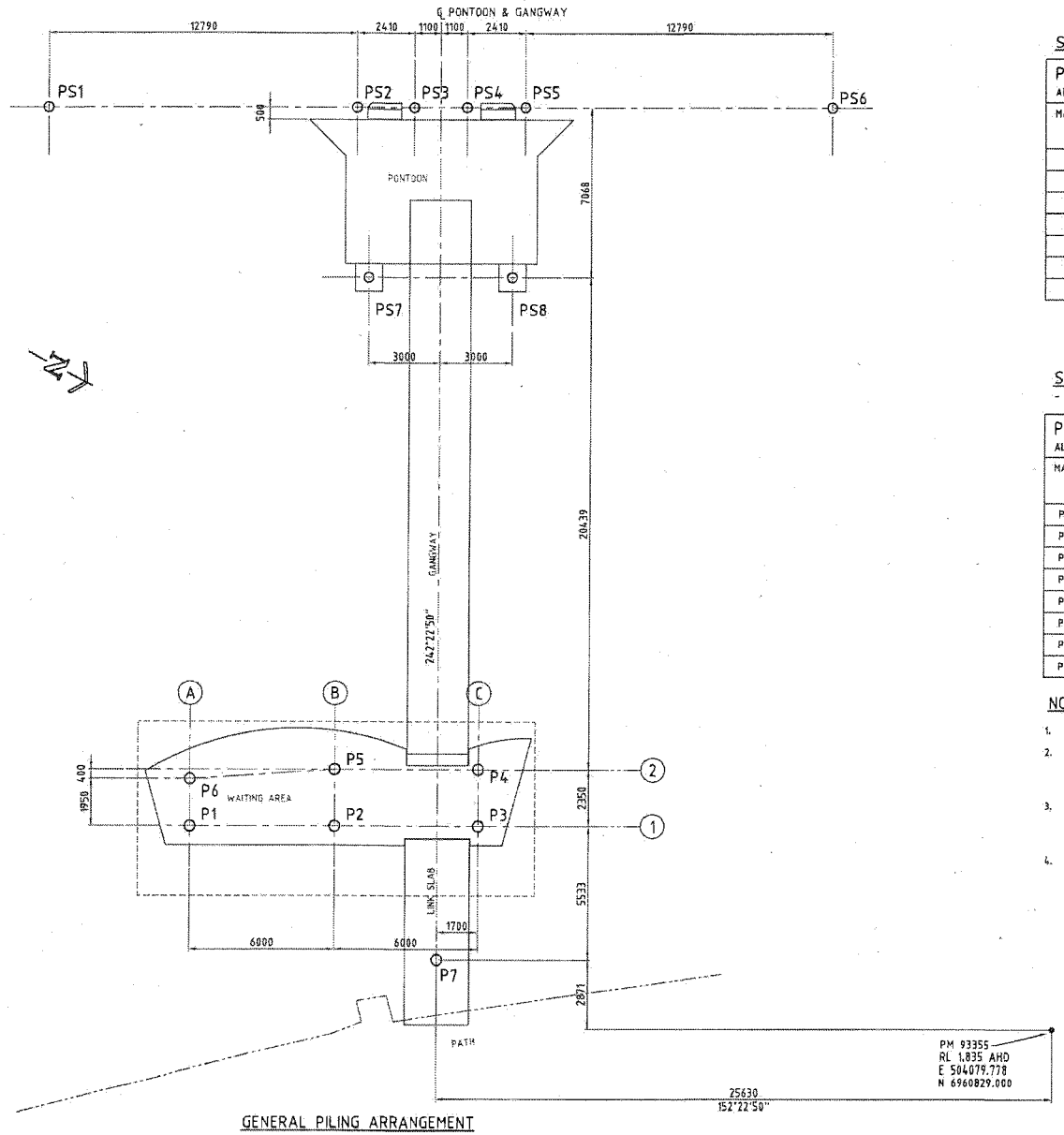

GENERAL PILING ARRANGEMENT

1 : 100 — 0 1 2 3 4 5m — FULL SIZE A1

STEEL PILING SCHEDULE - WAITING AREA

PILE SCHEDULE
ALL LEVELS GIVEN IN METRES TO A.H.D.

MARK	PRIMARY SIZE - GRADE (MPa) SIZE	CUT-OFF LEVEL	GROUND OR BED LEVEL	ESTIMATED TOE LEVEL	MINIMUM TOE LEVEL	ULTIMATE CAPACITY (REFER NOTE 3) kN
P1	Ø 457 x 12.7 GRADE 350	1.500	-1.5	-26.0	-13.0	900
P2	Ø 457 x 12.7 GRADE 350	1.500	-1.5	-26.0	-13.0	900
P3	Ø 457 x 12.7 GRADE 350	1.500	-1.0	-26.0	-13.0	900
P4	Ø 457 x 12.7 GRADE 350	1.500	-1.5	-26.0	-13.0	900
P5	Ø 457 x 12.7 GRADE 350	1.500	-2.5	-26.0	-13.0	900
P6	Ø 457 x 12.7 GRADE 350	1.500	-2.5	-26.0	-13.0	900
P7	Ø 610 x 12.7 GRADE 250	1.195	0.25	-12.0	-10.0	450

STEEL PILING SCHEDULE - PONTOON

- REFER DRAWING GE-011 FOR STEEL PILE DETAILS

PILE SCHEDULE
ALL LEVELS GIVEN IN METRES TO A.H.D.

MARK	PILE TYPE	CUT-OFF LEVEL	GROUND OR BED LEVEL	MINIMUM TOE LEVEL
PS1	D1	4.0	-8.0	-19.0
PS2	B1	8.0	-7.5	-19.0
PS3	B2	8.0	-7.5	-19.0
PS4	B1	8.0	-7.5	-19.0
PS5	B2	8.0	-7.5	-19.0
PS6	A	4.0	-7.5	-19.0
PS7	C	8.0	-6.5	-19.0
PS8	C	8.0	-6.5	-19.0

FOR INFORMATION ONLY

NOTES

1. TOE LEVELS ARE ESTIMATED ONLY FROM AVAILABLE GEOTECHNICAL INFORMATION.
2. "ULTIMATE PILE CAPACITY" IN THE TABLES HAS BEEN SPECIFIED IN ACCORDANCE WITH AS2159-1995 AND CORRESPONDS TO THE MINIMUM TEST VALUE TO BE ACHIEVED BY MILEY CALCULATION. A REDUCTION FACTOR OF 0.5 HAS BEEN INCORPORATED.
3. THE STEEL PILES ARE TO BE INSTALLED TO THE "MINIMUM TOE LEVEL" AS SHOWN ON THE DRAWINGS TO ACHIEVE LATERAL CAPACITY. IF UNABLE TO ACHIEVE, PREDRIVE OR ROCK SOCKET MINIMUM 2 DIA INTO DISTINCTLY WEATHERED OR BETTER ROCK.
4. GROUND OR BED LEVELS INFERRED FROM SURVEY DATA.

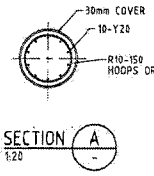

SECTION A
1:20

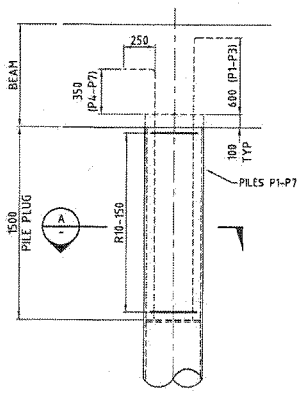

PILE PLUG DETAIL
1:20

© COPYRIGHT THIS DRAWING AND DESIGN REMAINS THE PROPERTY OF MAUNSELL MCINTYRE PTY LTD AND MAY NOT BE COPIED WITHOUT PRIOR WRITTEN APPROVAL FROM THIS COMPANY

No.	BY	DATE	DESCRIPTION	APPD
C	JLP	07.08.01	ISSUED FOR CONSTRUCTION	
B	PJC	1.12.00	TENDER - GENERAL REVISIONS	
A	PJC	31.10.00	FOR CONSTRUCTION	

Scales

BRISBANE CITY

Abi group

Maunsell McIntyre

COX RAYNER

THE SIGNING OF THIS TITLE BLOCK CONFIRMS THE DESIGN AND DRAFTING OF THIS PROJECT HAVE BEEN PREPARED AND CHECKED IN ACCORDANCE WITH THE MAUNSELL MCINTYRE QUALITY ASSURANCE SYSTEM CERTIFIED TO AS/NZS ISO 9001-1994

DESIGNED	MEC	CHECKED	DDL
DRAWN	PJC	CHECKED	DDL
APPROVED	DDL	DATE	7.12.00

Cad ref: W:\Short Term\103071100\103071100_CAD\stage_2\sydney-st\PE2-002.dwg
Last modified: 28 Jan 11 - 11:40

Project Title: BRISBANE FERRY TERMINALS – CONTRACT No. K57/99/2001

Drawing Title: SYDNEY STREET - PROJECT 2
PILING SCHEDULE AND SETOUT

Status: FOR CONSTRUCTION

Drg No.: PE2-002

Rev.: C

BCC.133.0089

PITS. REFER GE-017.

FOR INFORMATION ONLY

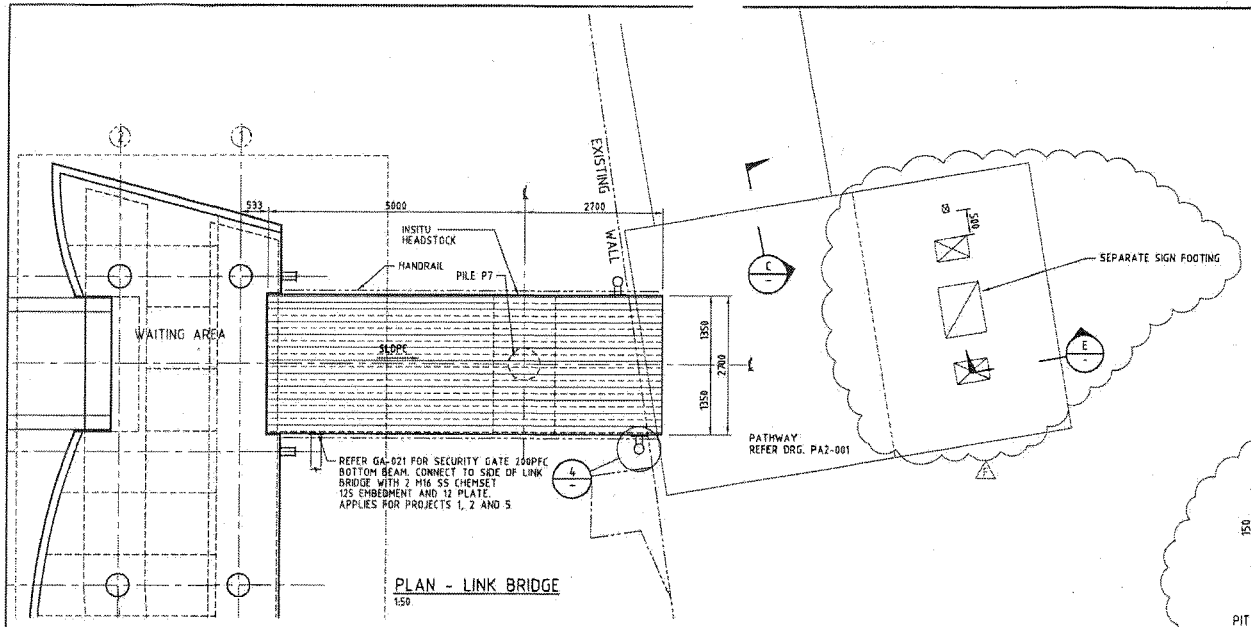

PLAN - LINK BRIDGE
1:50

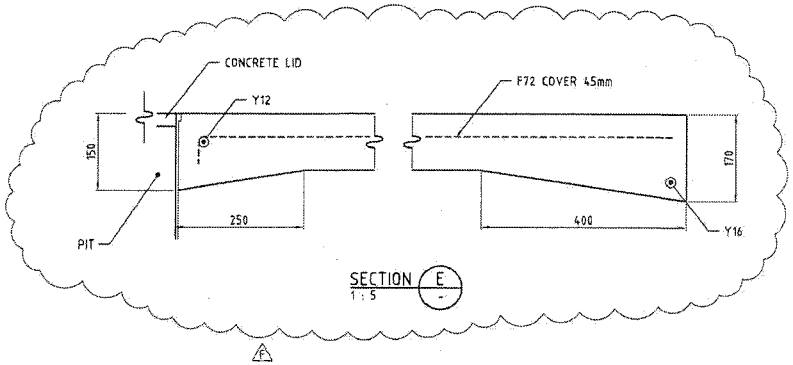

SECTION E
1 : 5

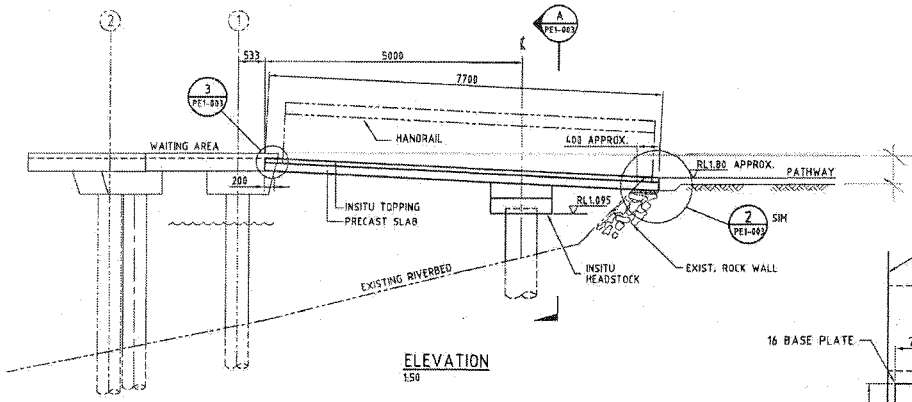

ELEVATION
1:50

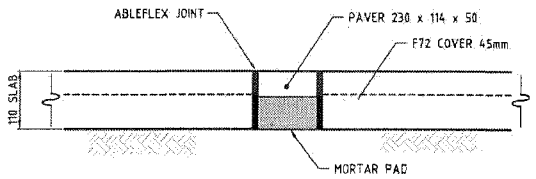

SECTION C TYPICAL
1 : 5

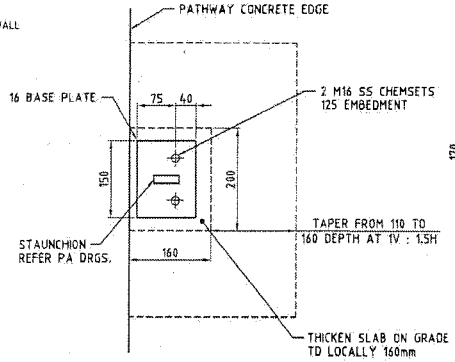

TYPE 4 BALUSTRADE BASE FIXING AND CONCRETE EDGE THICKENING

NOTE: THIS BALUSTRADE APPLIES TO THE PATHWAY FOR PROJECTS 1, 2 AND 3

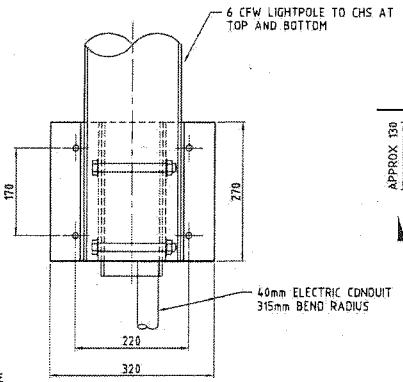

SECTION D
1 : 5

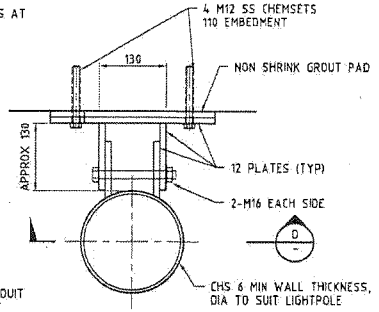

REFER SERVICES GENERAL ARRANGEMENTS FOR LIGHTPOLE LOCATIONS

DETAIL 4
1 : 5

NOTES

1. FOR NOTES REFER DRG PE1-003

© COPYRIGHT THIS DRAWING AND DESIGN REMAINS THE PROPERTY OF MAUNSELL MCINTYRE PTY LTD AND MAY NOT BE COPIED WITHOUT PRIOR WRITTEN APPROVAL FROM THIS COMPANY

No.	BY	DATE	DESCRIPTION	APPD
F	PJC	5.05.01	SIGN SLAB SHOWN	
E	PJC	19.03.01	PRECAST TO INSITU HEADSTOCK CHANGE	
D	PJC	12.03.01	GENERAL REVISIONS	
C	JLP	07.03.01	ISSUED FOR CONSTRUCTION	
B	PJC	1.12.00	TENDER - GENERAL REVISIONS	
A	ET	31.10.00	FOR CONSTRUCTION	

Scales: 0.5 0 1 2m; 1 : 50 FULL SIZE A1

BRISBANE CITY

Abi group

Maunsell McIntyre

COX RAYNER

THE SIGNING OF THIS TITLE BLOCK CONFIRMS THE DESIGN AND DRAFTING OF THIS PROJECT HAVE BEEN PREPARED AND CHECKED IN ACCORDANCE WITH THE MAUNSELL MCINTYRE QUALITY ASSURANCE SYSTEM CERTIFIED TO AS/NZS ISO 9001-1994

DESIGNED	MCC	CHECKED	DDL
DRAWN	PJC	CHECKED	DDL
APPROVED	DDL	DATE	7.12.00

Cad ref: W:\ShortTerm\10307101\10307101_CAD\stage_2\sydney-st\PE2-003.dwg
Last modified: 20 Jan 11 - 11:49

Project Title: BRISBANE FERRY TERMINALS – CONTRACT No. K57/99/2001

Drawing Title: SYDNEY STREET - PROJECT 2 LINK SLAB AND PATHWAY

Status: FOR CONSTRUCTION

Drg No.: PE2-003

Rev: F

BCC.133.0090

76

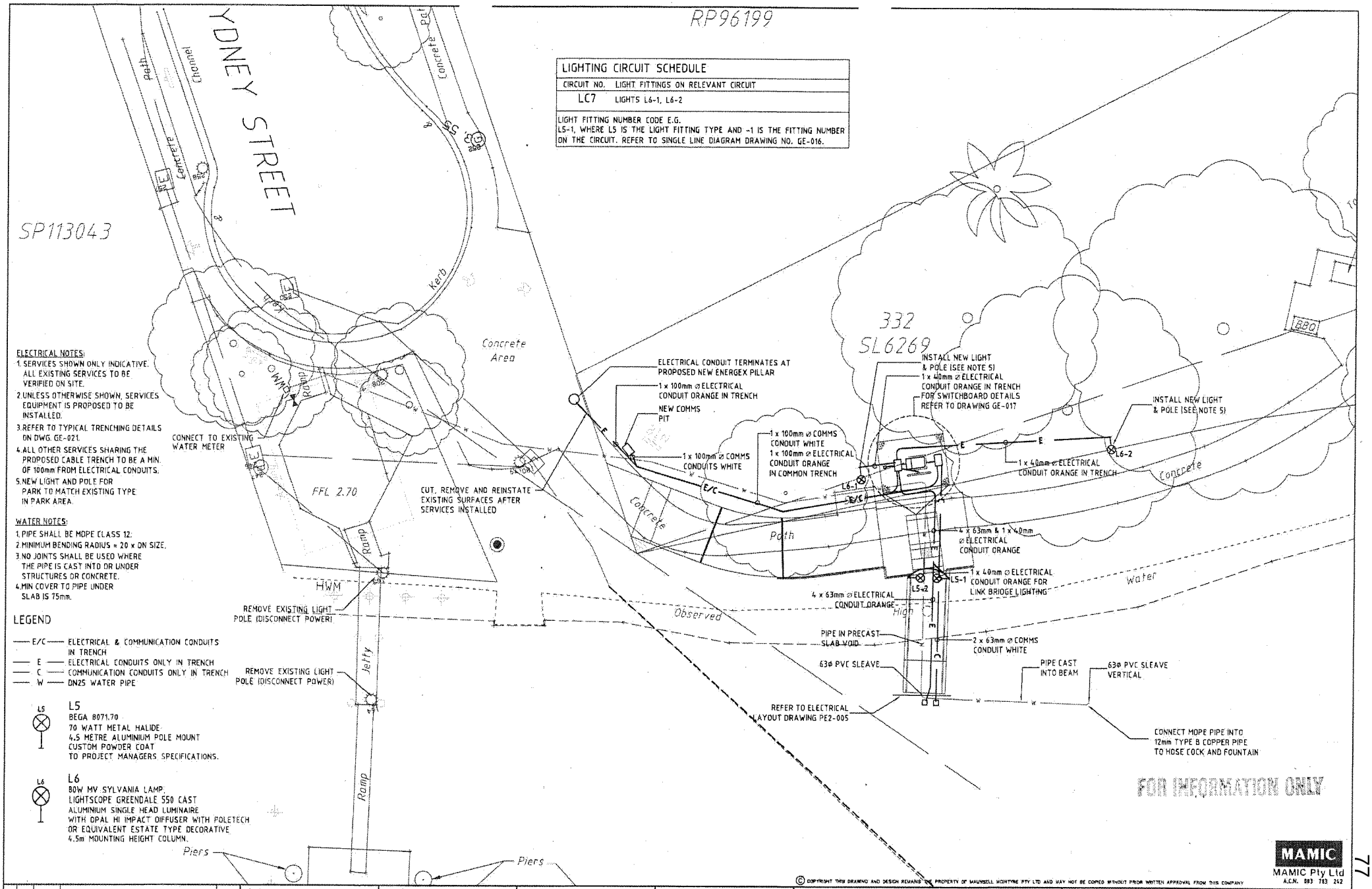

LIGHTING CIRCUIT SCHEDULE	
CIRCUIT NO.	LIGHT FITTINGS ON RELEVANT CIRCUIT
LC7	LIGHTS L6-1, L6-2

LIGHT FITTING NUMBER CODE E.G.
L5-1, WHERE L5 IS THE LIGHT FITTING TYPE AND -1 IS THE FITTING NUMBER ON THE CIRCUIT. REFER TO SINGLE LINE DIAGRAM DRAWING NO. GE-016.

ELECTRICAL NOTES:
1. SERVICES SHOWN ONLY INDICATIVE. ALL EXISTING SERVICES TO BE VERIFIED ON SITE.
2. UNLESS OTHERWISE SHOWN, SERVICES EQUIPMENT IS PROPOSED TO BE INSTALLED.
3. REFER TO TYPICAL TRENCHING DETAILS ON DWG. GE-021.
4. ALL OTHER SERVICES SHARING THE PROPOSED CABLE TRENCH TO BE A MIN. OF 100mm FROM ELECTRICAL CONDUITS.
5. NEW LIGHT AND POLE FOR PARK TO MATCH EXISTING TYPE IN PARK AREA.

WATER NOTES:
1. PIPE SHALL BE MOPE CLASS 12.
2. MINIMUM BENDING RADIUS = 20 x ON SIZE.
3. NO JOINTS SHALL BE USED WHERE THE PIPE IS CAST INTO OR UNDER STRUCTURES OR CONCRETE.
4. MIN COVER TO PIPE UNDER SLAB IS 75mm.

LEGEND

- E/C — ELECTRICAL & COMMUNICATION CONDUITS IN TRENCH
- E — ELECTRICAL CONDUITS ONLY IN TRENCH
- C — COMMUNICATION CONDUITS ONLY IN TRENCH
- W — DN25 WATER PIPE

L5
BEGA 8071.70
70 WATT METAL HALIDE
4.5 METRE ALUMINIUM POLE MOUNT
CUSTOM POWDER COAT
TO PROJECT MANAGERS SPECIFICATIONS.

L6
80W MV SYLVANIA LAMP.
LIGHTSCOPE GREENDALE S50 CAST ALUMINIUM SINGLE HEAD LUMINAIRE WITH OPAL HI IMPACT DIFFUSER WITH POLETECH OR EQUIVALENT ESTATE TYPE DECORATIVE 4.5m MOUNTING HEIGHT COLUMN.

FOR INFORMATION ONLY

No.	BY	DATE	DESCRIPTION	APPD
C	XP	07.03.01	ISSUED FOR CONSTRUCTION	
B	PJC	1.12.00	TENDER - GENERAL REVISIONS	
A	JMC	31.10.00	FOR CONSTRUCTION	

Scales: SCALE 1 : 100 — FULL SIZE A1

BRISBANE CITY

Abi group

Maunsell McIntyre
COX RAYNER

© COPYRIGHT THIS DRAWING AND DESIGN REMAINS THE PROPERTY OF MAUNSELL MCINTYRE PTY LTD AND MAY NOT BE COPIED WITHOUT PRIOR WRITTEN APPROVAL FROM THIS COMPANY

THE SIGNING OF THIS TITLE BLOCK CONFIRMS THE DESIGN AND DRAFTING OF THIS PROJECT HAVE BEEN PREPARED AND CHECKED IN ACCORDANCE WITH THE MAUNSELL MCINTYRE QUALITY ASSURANCE SYSTEM CERTIFIED TO AS/NZS ISO 9001-1994

DESIGNED		CHECKED	
DRAWN		CHECKED	
APPROVED		DATE	

Cad ref: W:\ShortTerm\10307106\10307108_CAD\stage_2\Electrical\PE2-004.dwg
Last modified: 26 Jan 11 - 11:47

MAMIC
MAMIC Pty Ltd
A.C.N. 083 783 242

Project Title: BRISBANE FERRY TERMINALS – CONTRACT No. K57/99/2001

Drawing Title: SYDNEY STREET - PROJECT 2
SERVICES GENERAL ARRANGEMENT

Status: FOR CONSTRUCTION

Drg No.: PE2-004

Rev: C

77

BCC 133 0091

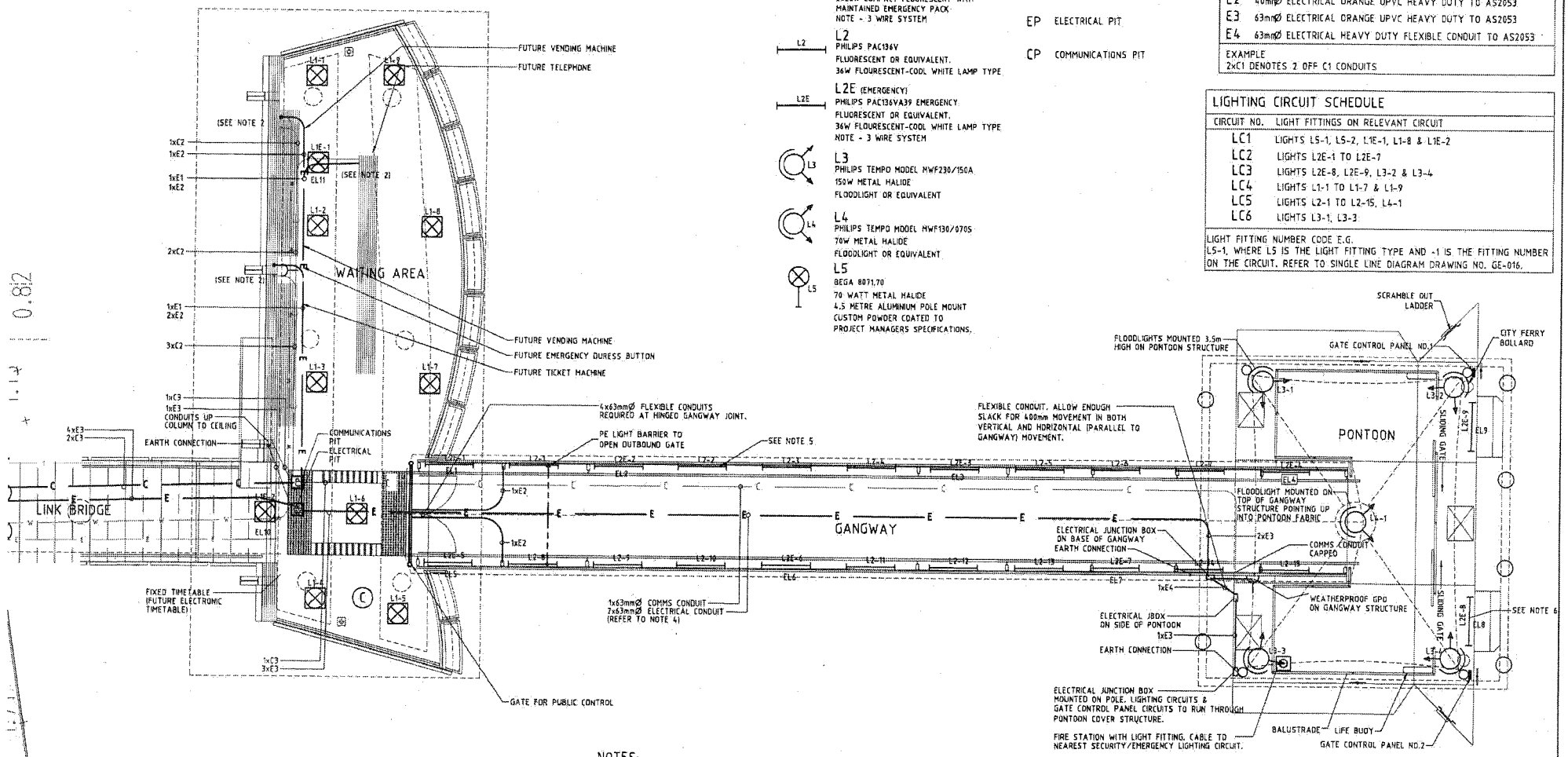

© COPYRIGHT THIS DRAWING AND DESIGN REMAINS THE PROPERTY OF MAUNSELL MCINTYRE PTY LTD AND MAY NOT BE COPIED WITHOUT PRIOR WRITTEN APPROVAL FROM THIS COMPANY

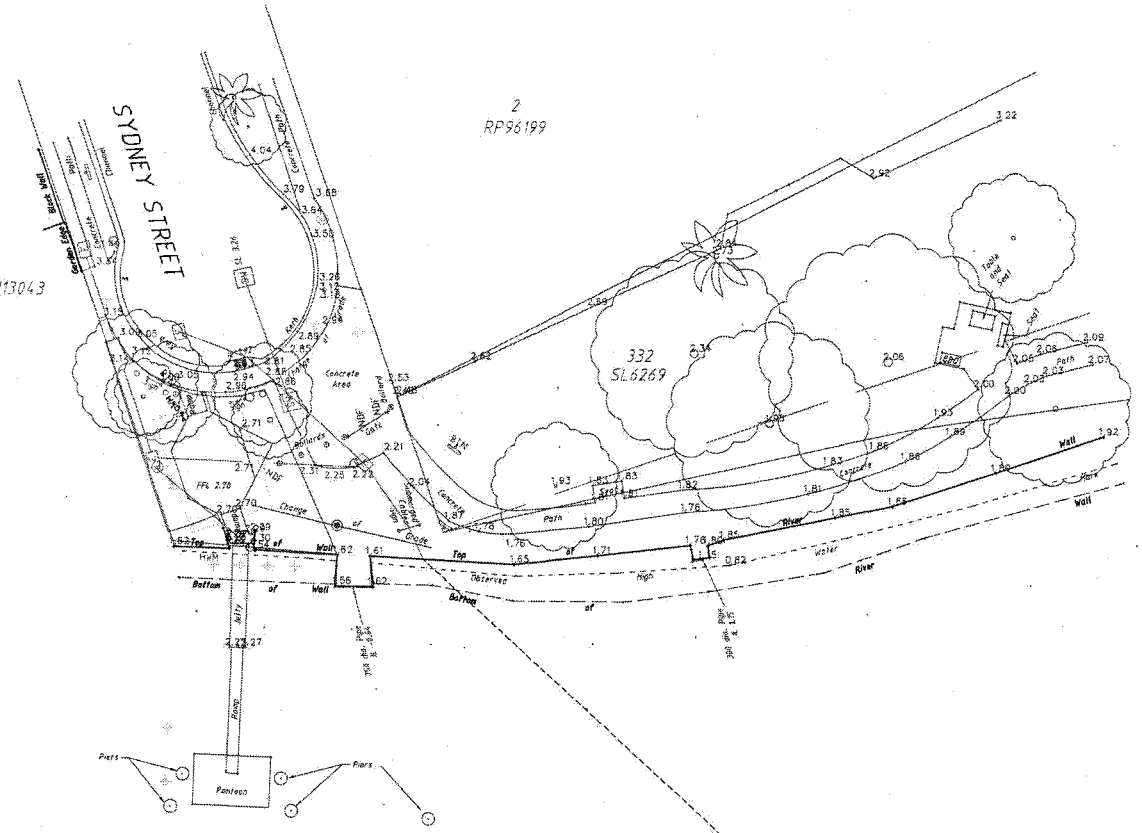

NOTE:

The title boundaries as shown hereon have not been reinstated or remarked at the time of survey and have been determined from deed dimension only derived from SL10866, RP102200, SP113043 and SL6269 in the Department of Natural Resources and their position may not be accurate.

This plan is for design purposes only. Not to be used for construction.

FISHER STEWART PTY LTD should be contacted should field set out be required resulting from works derived from this detail plan.

Services shown hereon have been located, where possible, by field survey. If not able to be located, services have been plotted from search records and notation has been made hereon.

Where such records either do not exist or are inadequate a notation has been made hereon.

Prior to any demolition, excavation or construction on the site, the relevant authority should be contacted for possible location of further underground services and detailed locations of all services.

LEGEND TO SYMBOLS

- BENCH MARK
- PERMANENT MARK
- WATER VALVE
- FIRE HYDRANT
- STORMWATER MANHOLE
- SEWERAGE MANHOLE
- SIGN
- ADVERTISING SIGN
- TRAFFIC LIGHTS
- TRAFFIC SIGNAL PIT
- TRAFFIC SIGNAL CONTROL BOX
- GULLY TRAP
- FGT FIELD GULLY TRAP
- WATER METER
- DRIVEWAY
- GAS VALVE
- E ELECTRICITY PILLAR
- E ELECTRICITY PIT
- POWER POLE
- STREET LIGHT
- STREET LIGHT/POWER POLE
- TRANSFORMER ON POLE
- T TELEPHONE BOX
- TELSTRA PILLAR
- TELSTRA PIT
- SOB SEWER OB/VENT
- RDDP ROOFWATER DOWN PIPE
- CCB COMPUTER CABLE BOX
- STORM WATER
- SEWER MAIN
- GAS MAIN
- WATER MAIN
- COMPUTER CABLES
- TELSTRA CONDUIT
- ELECTRICITY

Level Datum AHD

Any problems associated with the electronic data contained in this CAD file should be reported to:

FISHER STEWART PTY LTD
PO Box 297,
Fortitude Valley, Q 4006
Telephone (07) 3852 1720
Fax (07) 3852 1740
Email: fsbris@fisherstewart.com.au

ELECTRONIC TRANSFER FILES

The electronic data supplied via this CAD file is a copy of a drawing file held in the office of FISHER STEWART PTY LTD at the time & date of transfer.

The information contained within this electronic model should not be reproduced, altered or supplied to a third party in any way without the written permission of FISHER STEWART PTY LTD.

In the event that the electronic data transferred, and/or any attachment or associated document or part thereof,is utilised in any manner whatsoever other than for the specific purposes for which it was prepared, FISHER STEWART PTY LTD will not be liable for such use or any damages of whatever type or extent which may result.

Any reproduction of the electronic data contained in this drawing file must contain this disclaimer.

FOR INFORMATION ONLY

© COPYRIGHT THIS DRAWING AND DESIGN REMAINS THE PROPERTY OF MAUNSELL McINTYRE PTY LTD AND MAY NOT BE COPIED WITHOUT PRIOR WRITTEN APPROVAL FROM THIS COMPANY

No.	BY	DATE	DESCRIPTION	APPD
B	JLP	07.03.01	ISSUED FOR CONSTRUCTION	
A	PJC	1.12.00	FOR CONSTRUCTION	

Scales: 1 : 200 FULL SIZE A1

Maunsell McIntyre
COX RAYNER

THE SIGNING OF THIS TITLE BLOCK CONFIRMS THE DESIGN AND DRAFTING OF THIS PROJECT HAVE BEEN PREPARED AND CHECKED IN ACCORDANCE WITH THE MAUNSELL McINTYRE QUALITY ASSURANCE SYSTEM CERTIFIED TO AS/NZS ISO 9001-1994

DESIGNED	MCC	CHECKED	DDL
DRAWN	PJC	CHECKED	DDL
APPROVED	DDL	DATE	7.12.00

Cad ref: W:\ShortTerm\10307100\10307100_CAD\stage_2\sydney-st\PE2-006.dwg
Last modified: 20 Jan 11 - 11:40

Project Title: BRISBANE FERRY TERMINALS – CONTRACT No. K57/99/2001

Drawing Title: SYDNEY STREET - PROJECT 2 SURVEY PLAN

Status: FOR CONSTRUCTION | Drg No.: PE2-006 | Rev: B

BCC 13.0093

BRISBANE CITY COUNCIL
BRISBANE FERRY TERMINALS

CONSTRUCTION OF REGATTA FERRY TERMINAL

FOR INFORMATION ONLY



STRUCTURAL ENGINEERING DRAWINGS

DRG No.	DRAWING TITLE	
RG-S-001	LOCALITY PLAN AND DRAWING LIST	
RG-S-002	GENERAL NOTES - SHEET 1	
RG-S-003	GENERAL NOTES - SHEET 2	
RG-S-005	GENERAL ARRANGEMENT	PLAN
RG-S-006	GENERAL ARRANGEMENT	SECTIONS
RG-S-007	GENERAL ARRANGEMENT	ON-LAND SETTING OUT
RG-S-010	PILING LAYOUT AND SCHEDULES	
RG-S-011	PILE AND FENDER DETAILS - SHEET 1	
RG-S-012	PILE AND FENDER DETAILS - SHEET 2	
RG-S-015	SURVEY PLAN	
RG-S-020	RAMPS AND PAVING SLABS	SHEET 1
RG-S-021	RAMPS AND PAVING SLABS	SHEET 2
RG-S-030	LINK SLAB - ARRANGEMENT	
RG-S-040	WAITING AREA - CONCRETE	ARRANGEMENT
RG-S-041	WAITING AREA - CONCRETE	DETAILS
RG-S-050	WAITING AREA - ROOF	ARRANGEMENT
RG-S-051	WAITING AREA - ROOF	DETAILS
RG-S-055	GANGWAY ARRANGEMENT	
RG-S-056	GANGWAY DETAILS	SHEET 1
RG-S-060	PONTOON ARRANGEMENT	
RG-S-061	PONTOON DETAILS	SHEET 1
RG-S-062	PONTOON DETAILS	SHEET 2
RG-S-063	PONTOON DETAILS	SHEET 3
RG-S-070	PILING RING BEAM - ARRANGEMENT AND DETAILS	

CIVIL ENGINEERING DRAWINGS

DRG No.	DRAWING TITLE
RG-C-001	CIVIL WORKS

SECTION 86 APPLICATION

DRG No.	DRAWING TITLE
RG-RPD-001	REAL PROPERTY BOUNDARIES

RPECQ No. 22

No.	BY	DATE	DESCRIPTION	APPD
A		12.7.02	ISSUED FOR SECTION 86 APPROVAL	

Scales

Maunsell

COX
COX RAYNER

© COPYRIGHT THIS DRAWING AND DESIGN REMAINS THE PROPERTY OF MAUNSELL AUSTRALIA PTY LTD AND MAY NOT BE COPIED WITHOUT PRIOR WRITTEN APPROVAL FROM THIS COMPANY

THE SIGNING OF THIS TITLE BLOCK CONFIRMS THE DESIGN AND DRAFTING OF THIS PROJECT HAVE BEEN PREPARED AND CHECKED IN ACCORDANCE WITH THE MAUNSELL AUSTRALIA QUALITY ASSURANCE SYSTEM CERTIFIED TO AS/NZS ISO 9001-1994

DESIGNED	CMD	CHECKED	DDL
DRAWN	PJT	CHECKED	DDL
APPROVED		DATE	

Cad ref: A:\MMPL\10302002\Cad\REGATTA\Rg-S-001.dwg
Last modified: 12 Jul 02 - 14:25

Project Title: BRISBANE FERRY TERMINALS – CONTRACT No. K57/99/2001

Drawing Title: REGATTA FERRY TERMINAL
LOCALITY PLAN AND DRAWING LIST

Status

Drg No. RG-S-001 Rev A

"ASH-05"

80

BCC.133.0094

GENERAL

G1 THESE DRAWINGS SHALL BE READ IN CONJUNCTION WITH THE SPECIFICATION, DOCUMENTATION FROM OTHER CONSULTANTS AND WITH SUCH OTHER WRITTEN INSTRUCTIONS AS MAY BE ISSUED DURING THE COURSE OF THE CONTRACT. ALL DISCREPANCIES SHALL BE REFERRED TO THE SUPERINTENDENT'S REPRESENTATIVE FOR DECISION BEFORE PROCEEDING WITH THE WORK.

G2 ALL DIMENSIONS RELEVANT TO THE SETTING OUT AND OFF-SITE WORK SHALL BE VERIFIED BY THE CONTRACTOR BEFORE CONSTRUCTION AND FABRICATION IS COMMENCED. DRAWINGS SHALL NOT BE SCALED.

G3 DURING CONSTRUCTION THE CONTRACTOR SHALL BE RESPONSIBLE FOR MAINTAINING THE WORKS IN A STABLE CONDITION AND ENSURING NO PART SHALL BE OVERSTRESSED UNDER CONSTRUCTION ACTIVITIES. TEMPORARY BRACING OR PROPPING SHALL BE PROVIDED BY THE CONTRACTOR AS REQUIRED AND TO THE APPROVAL OF THE SUPERINTENDENT'S REPRESENTATIVE.

G4 WORKMANSHIP AND MATERIALS SHALL BE IN ACCORDANCE WITH THE RELEVANT CURRENT AUSTRALIAN STANDARDS, OTHER CODES REFERENCED THEREIN INCLUDING ALL AMENDMENTS, THE LOCAL STATUTORY AUTHORITIES, AND GENERALLY ACCEPTED STANDARDS OF GOOD BUILDING PRACTICE SHALL BE FOLLOWED EXCEPT WHERE VARIED BY THE CONTRACT DOCUMENTS.

G5 ALL DIMENSIONS ARE IN MILLIMETRES UNLESS STATED OTHERWISE. ALL LEVELS, METRAGES, CHAINAGES AND CO-ORDINATES ARE EXPRESSED IN METRES.

G6 NORTHING AND EASTING CO-ORDINATES ARE TO AMG 56 AND THE LEVEL DATUM REFERRED TO IN THESE DRAWINGS IS THE AUSTRALIAN HEIGHT DATUM (A.H.D.).

G7 BENCH MARKS (B.M.) TO BE USED FOR THIS CONTRACT ARE SHOWN ON THE GENERAL ARRANGEMENT.

G8 EXISTING SERVICES SHOWN ON PLANS ARE NOT NECESSARILY COMPLETE NOR ARE THEIR LOCATION WITH REGARDS TO LOCATION AND DEPTH PRECISE.

G9 PROPRIETARY ITEMS SHALL BE INSTALLED IN ACCORDANCE WITH THE MANUFACTURERS SPECIFICATIONS.

AQUADECK

A1 TYPE 1 - TO BE ACL COMCORK AQUADECK FLOOR COVERING AD1050 DIAMOND PROFILE STEEL GREY

A2 TYPE 2 - TO BE ACL COMCORK AQUADECK FLOOR COVERING AD1060 DIAMOND PROFILE BLACK

A3 TYPE 3 - TO BE ACL COMCORK AQUADECK FLOOR COVERING TAC 1060 HAZARD TACTILE BANDS BLACK

A4 TYPE 4 - TO BE ACL COMCORK AQUADECK FLOOR COVERING AD1012 DIAMOND PROFILE SAND

A5 TYPE 5 - TO BE ACL COMCORK AQUADECK FLOOR COVERING AD1020 DIAMOND PROFILE TEAK

CONCRETE

C1 ALL WORKMANSHIP AND MATERIALS SHALL BE IN ACCORDANCE WITH AS3600 EXCEPT WHERE VARIED BY CONTRACT DOCUMENTS.

C2 MINIMUM CLEAR CONCRETE COVER TO REINFORCEMENT SHALL BE AS FOLLOWS UNLESS NOTED OTHERWISE.
GENERALLY - 50mm.
CONCRETE SURFACES ABOVE GROUND INTERIOR ENVIRONMENTS - 35mm

C3 ALL CONCRETE SHALL BE PROPERLY CURED BY KEEPING ALL EXPOSED SURFACES IN A MOIST OR DAMP CONDITION FOR AT LEAST THE FIRST SEVEN DAYS AFTER PLACING U.N.O. FOR ALTERNATIVE CURING METHODS, REFER SPECIFICATION. ANY CURING AGENTS SHALL BE COMPATIBLE WITH SURFACE FINISHES.

C4 NO HOLES, CHASES OR EMBEDMENT OF PIPES OTHER THAN THOSE SHOWN ON THE STRUCTURAL DRAWINGS SHALL BE MADE IN CONCRETED MEMBERS WITHOUT PRIOR APPROVAL FROM THE SUPERINTENDENT'S REPRESENTATIVE.

C5 CONSTRUCTION JOINTS SHALL BE PROPERLY FORMED EITHER HORIZONTALLY OR VERTICALLY, THOROUGHLY SCABBLED TO REMOVE LAITANCE AND POORLY COMPACTED MATERIAL, AND USED ONLY WHERE SHOWN OR SPECIFICALLY APPROVED BY THE SUPERINTENDENT'S REPRESENTATIVE.

PROPERTY	BLINDING	PILING INFILL	ALL OTHER STRUCTURAL CONCRETE	FOOTPATH ON GROUND
CONCRETE CLASS	N15	N45	N50	N32
CEMENT TYPE	GP	GP	GP	GP
MAX. AGGREGATE SIZE (MM)	20	20	20	20
MAX. DRYING SHRINKAGE AT 56 DAYS TO AS1012.13 (MICROSTRAINS)	-	-	700	-
CHARACTERISTIC STRENGTH AT 28 DAYS (MPA)	15	50	50	32
SLUMP RANGE (MM)	TO SUIT MIX DESIGN	TO SUIT MIX DESIGN	80±15	80±15
PROJECT ASSESSMENT REQUIRED	NO	YES	YES	YES

C7 REINFORCEMENT SYMBOLS:

N	NORMAL DUCTILITY DEFORMED BARS TO AS/NZS 4671
Y	HOT ROLLED DEFORMED BAR TO AS1302 GRADE 400
R	STRUCTURAL GRADE PLAIN ROUND BAR TO AS1302
DF	DEFORMED (500 MPa) MESH TO AS/NZS 4671
F	HARD DRAWN STEEL WIRE REINFORCING FABRIC TO AS1304
W	HARD DRAWN STEEL WIRE REINFORCING WIRE TO AS1303

THE NUMBER FOLLOWING THE BAR SYMBOL IS THE NORMAL BAR DIAMETER IN MILLIMETRES.

C8 REINFORCEMENT POSITION SYMBOLS:

T	TOP FACE	FF	FAR FACE	PRS	PAIRS
NF	NEAR FACE	EW	EACH WAY	LV.	LENGTH VARIES
B	BOTTOM FACE	EF	EACH FACE		

C9 REINFORCEMENT IS REPRESENTED DIAGRAMMATICALLY AND IS NOT NECESSARILY SHOWN IN TRUE PROJECTION.

C10 WELDING OF REINFORCEMENT SHALL NOT BE PERMITTED WITHOUT THE PRIOR APPROVAL OF THE SUPERINTENDENT'S REPRESENTATIVE.

C11 ALL REINFORCEMENT SHALL BE FIRMLY SUPPORTED ON PLASTIC OR CLASS N50 CONCRETE OR APPROVED METAL CHAIRS AT NOT GREATER THAN 900 CENTRES BOTH WAYS. BARS SHALL BE TIED AT ALTERNATE INTERSECTIONS.

C12 UNLESS SHOWN OTHERWISE, MINIMUM LAP LENGHTS FOR GRADE 400Y BARS SHALL BE AS SHOWN BELOW. BARS WITH A CLEAR DISTANCE BETWEEN ADJACENT BARS OF LESS THAN 150mm SHALL HAVE THE LAP LENGTHS SHOWN BELOW INCREASED BY 50%.

HORIZONTAL BARS WITH GREATER THAN 300mm OF CONCRETE CAST BELOW THE BAR:

N 12 - 375 N 24 - 1050
N 16 - 500 N 28 - 1400
N 20 - 750

OTHER BARS:

N 12 - 300 N 24 - 850
N 16 - 400 N 28 - 1100
N 20 - 600

C13 FABRIC LAPS.-

a) SIDE LAPS TO FABRIC REINFORCEMENT SHALL BE:-



b) END LAPS TO FABRIC REINFORCEMENT SHALL BE:-

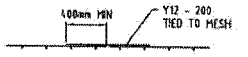

C14 40 BAR DIAMETERS MINIMUM LAP LENGTH FOR 250 R BARS.

C15 FORMWORK SHALL BE DESIGNED AND CONSTRUCTED IN ACCORDANCE WITH AS3610.

C16 FORMWORK TO BE CLASS 2 FOR EXPOSED SURFACES OTHERWISE CLASS 3 FOR HIDDEN VERTICAL FACES AND CLASS 4 FOR SOFFITS.

C17 ALL FORMED EXPOSED AND RE-ENTRANT CORNERS SHALL BE CHAMFERED OR FILLETED 25mm U.N.O.

C18 MINIMUM STRIPPING TIMES USING GENERAL PURPOSE PORTLAND CEMENT TYPE GP SHALL BE AS FOLLOWS:

SURFACE ORIENTATION AND TYPE		MINIMUM STRIPPING TIME FOR AVERAGE AIR TEMPERATURE CURING PERIOD		
		1 DAY	2 DAYS	3 DAYS
HORIZONTAL	FORMS	4 DAYS	6 DAYS	8 DAYS
(BEAM AND SLAB SOFFITS)	SUPPORTING MEMBERS	12 DAYS	18 DAYS	24 DAYS

THIS TABLE IS BASED ON COMPLIANCE WITH THE CONDITIONS SPECIFIED IN CLAUSES 5.4.3.2 A, B, AND C OF AS3610. CLAUSE 5.4.3.2B OF AS3610 SHALL ALSO APPLY TO SPECIAL - CLASS CONCRETE. IF THESE CONDITIONS CANNOT BE ACCOMMODATED, THE CASE SHALL BE REFERRED TO THE SUPERINTENDENT'S REPRESENTATIVE.

C19 MEMBER SIZES ARE THE MINIMUM TO BE ACHIEVED AND EXCLUDE APPLIED FINISHES.

FOR INFORMATION ONLY

RPECQ No. 22

© COPYRIGHT THIS DRAWING AND DESIGN REMAINS THE PROPERTY OF MAUNSELL AUSTRALIA PTY LTD AND MAY NOT BE COPIED WITHOUT PRIOR WRITTEN APPROVAL FROM THIS COMPANY

No.	BY	DATE	DESCRIPTION	APPD
A		12.7.02	ISSUED FOR SECTION 46 APPROVAL	

Scales

Maunsell Maunsell Australia Pty Ltd with Hyder Consulting, Consulting Engineers and Planners

COX COX RAYNER

THE SIGNING OF THIS TITLE BLOCK CONFIRMS THE DESIGN AND DRAFTING OF THIS PROJECT HAVE BEEN PREPARED AND CHECKED IN ACCORDANCE WITH THE MAUNSELL AUSTRALIA QUALITY ASSURANCE SYSTEM CERTIFIED TO AS/NZS ISO 9001:1994

DESIGNED	CMD	CHECKED	DDL
DRAWN	PJT	CHECKED	DDL
APPROVED		DATE	

Cad ref: ASHMP1
Last modified: 1
Cad file: S:\GATTA\Rg-S-002.dwg
Project Title: BRISBANE FERRY TERMINALS - CONTRACT No. K57/99/2001
Drawing Title: REGATTA FERRY TERMINAL GENERAL NOTES - SHEET 1
Status
Dwg No. RG-S-002
Rev A

BCC.133.0095

81

STEELWORK NOTES

S1 THE FABRICATION AND ERECTION OF ALL STEELWORK SHALL BE IN ACCORDANCE WITH THE SPECIFICATION AND AS4100.

S2 SHOP DRAWINGS SHALL BE SUBMITTED TO THE SUPERINTENDENT'S REPRESENTATIVE. FOR REVIEW. (REFER SPECIFICATION FOR RESPONSIBILITIES). FABRICATION SHALL NOT COMMENCE UNTIL APPROVAL HAS BEEN GIVEN.

S3 THE FOLLOWING MATERIAL GRADES SHALL BE USED UNLESS NOTED OTHERWISE.

HOT ROLLED SECTIONS	GRADE 300 TO AS3679
PLATES	GRADE 250 TO AS3678
HOLLOW SECTIONS	GRADE 350 TO AS1163 U.N.O.
COLD FORMED SECTIONS	GRADE G450-2430 TO AS1538 AND AS1397

S4 BOLTS:
ALL STAINLESS STEEL BOLTS, NUTS AND WASHERS SHALL BE GRADE 316 STAINLESS STEEL, GRADE 70, U.N.O.

ALL STRUCTURAL STEEL BOLTS, NUTS AND WASHERS SHALL BE HOT DIP GALVANISED.
ALL STRUCTURAL STEEL BOLTS SHALL BE GRADE 8.8/S, U.N.O.

S5 ALL WELDING ELECTRODES SHALL BE GRADE E48XX IN ACCORDANCE WITH AS1553 AND ALL WELDING SHALL BE IN ACCORDANCE WITH AS1554/1.

S6 ALL WELDS SHALL BE CATEGORY SP.

S7 ALL BUTT WELDS SHALL BE COMPLETE PENETRATION, U.N.O.

S8 ALL COMPLETE PENETRATION BUTT WELDS SHALL BE ULTRASONIC TESTED IN ACCORDANCE WITH AS2207. 15% OF FILLET WELDS SHALL BE MAGNETIC PARTICLE EXAMINED IN ACCORDANCE WITH AS1171.

S9 'LYSAGHT' Z OR C SECTIONS SHALL BE HOT DIP GALVANISED, U.N.O., MANUFACTURED FROM HOT DIP ZINC COATED STEEL COIL CONFORMING TO AS1397 IN THE FOLLOWING GRADES AND COATING CLASSES:

BMT	GRADE	COATING CLASS
1.0	G550	Z200
1.2	G550	Z200
1.5, 1.9	G450	Z200
2.4, 3.0	G450	Z200

S10 PROVIDE ALL CLEATS, BRACKETS, FIXING HOLES, ETC. REQUIRED BY THE SERVICES DRAWINGS.

S11 ALL STEELWORK SHALL BE PAINTED OR GALVANISED OR BOTH IN ACCORDANCE WITH THE SPECIFICATION.

S12 ALL STEEL PILES TO RECEIVE A PROTECTIVE COATING IN ACCORDANCE WITH THE SPECIFICATION.

S13 CHEMSET ANCHORS SHALL BE 'RAMSET' STAINLESS STEEL ANCHORS, OR EQUIVALENT.

S14 ALL STAINLESS STEEL NUTS AND BOLTS SHALL BE WELDED TOGETHER AFTER TIGHTENING.

S15. ALL STAINLESS STEEL "SS" SHALL BE GRADE 316L WELDING TO COMPLY TO AS1554 USING GRADE 316L ELECTRODES, U.N.O.

S16. ALL WELD SPLATTER SHALL BE REMOVED PRIOR TO GRIT BLASTING.

S17 ALL HOLLOW SECTIONS TO HAVE CAP PLATES 6mm THICK, FULLY SEALED.

S18. ALL METALWORK SHALL BE NEATLY FINISHED WITH ALL SHARP EDGES GROUND SMOOTH AND SCALE REMOVED.

S19 ALL WELDS SHALL BE 6MM CONTINUOUS FILLET WELDS WHERE POSSIBLE OTHERWISE FULL PENETRATION BUTT WELDS, UNLESS OTHERWISE NOTED. ALL WELDED JOINTS MUST BE FULLY SEALED.

S20 THERE SHALL BE NO DIRECT CONTACT BETWEEN DISSIMILAR METALS. SEPARATION SHALL BE PROVIDED BY AN APPROVED SYNTHETIC INSULATION.

S21 ALL BASE PLATES, CLEATS, ETC. BEARING AGAINST CONCRETE SHALL BE SEATED ON A 3mm THICK NEOPRENE PAD, OF THE SAME PROFILE AS THE BEARING PLATE.

S22 ALL COPPER PIPES SHALL BE WRAPPED IN "DENSO" TAPE PETROLATUM SYSTEM WHERE UNDERGROUND AND "DENSO" TAPE COVERCOAT SYSTEM WHERE EXPOSED.

TIMBER

T1 ALL TIMBER DESIGN AND CONSTRUCTION SHALL BE IN ACCORDANCE WITH AS 1720-TIMBER STRUCTURES CODE AND AS 1684 - TIMBER FRAMING CODE.

T2 FENDERS - USE UNSEASONED TURPENTINE WITH NO SAPWOOD PRESENT. SUPPLIERS TO BE "OUTDOOR STRUCTURES" OR EQUAL

T3 TIMBER PILES SHALL BE CCA TREATED FOR HAZARD LEVEL H5 IN ACCORDANCE WITH AS 1604. SUPPLIERS TO BE 'KOPPERS LOGS' OR EQUAL.

T4 TIMBER PILES SHALL BE DRIVEN IN ACCORDANCE WITH AS 2159 - PILING CODE - TO THE MINIMUM EMBEDMENT DEPTHS SPECIFIED.

T5 TIMBER BEARERS AND JOISTS SHALL BE TREATED FOR HAZARD LEVEL H3 IN ACCORDANCE WITH AS 1604. BEARERS AND JOIST SHALL BE F22 GRADE HARDWOOD - 'SPOTTED GUM' OR APPROVED EQUIVALENT.

T6 CUTS, RECESS, LAPS AND END GRAIN SHALL BE COATED LIBERALLY WITH CN EMULSION BY KOPPERS IN ACCORDANCE WITH THE DIRECTIONS FOR USE.

T7 ALL TIMBER SHALL BE PROTECTED FROM THE WEATHER BEFORE AND AFTER INSTALLATION.

T8 TIMBER DIMENSIONS ON THE FINISHED WIDTH AND THICKNESS TO BE: +/-2mm

T9 ALL TIMBER JOINTS AND CONNECTORS ARE TO BE 100mm MINIMUM AWAY FROM LOOSE KNOTS, SEVERE SLOPING GRAIN, GUM VEINS OR OTHER MINOR DEFECTS.

T10 ALL TIMBER TO TIMBER FIXINGS SHALL BE MADE WITH Z/M16 MINIMUM. (GALV.)

T11 RETIGHTEN ALL BOLTS/STUDS WHEN FULL LOAD IS APPLIED, AND AT THE COMPLETION OF WORK.

ALUMINIUM NOTES

A1 ALL WORKMANSHIP AND MATERIALS SHALL COMPLY WITH AS1664.

A2 ALUMINIUM SECTIONS SHALL COMPLY WITH AS1734, AS1866 OR AS1867.

A3 ALL WELDING SHALL COMPLY WITH AS1665.

A4 ALL WELDING SHALL BE CARRIED OUT USING ARGON GAS SHIELDING.

A5 ALUMINIUM EXTRUSIONS SHALL BE ALLOY 6061T6.

A6 PLATE IS TO BE ALLOY 5083 H321.

A7 TREAD PLATE IS TO BE ALLOY 5251 H34.

A8 BOLTS SHALL BE INSULATED FROM ALUMINIUM BY THE USE OF A 1mm NYLON SLEEVE ON THE BOLT SHANK AND 3mm THICK NYLON WASHERS UNDER BOLT HEAD AND NUT.

DESIGN DATA

ENVIRONMENTAL LOADS

D1 WAVE LOADS
MAXIMUM WAVE HEIGHT 0.8M WITH A PERIOD OF 2 TO 4 SECONDS.

D2 CURRENT
MAXIMUM CURRENT FLOOD VELOCITY OF 3M/S PARALLEL TO QUAY LINE.

D3 WIND
FORCES CALCULATED IN ACCORDANCE WITH AS1170 PART 2.
BASIC WIND SPEED VR = 49M/S IN TERRAIN CATEGORY 2 IN ANY DIRECTION.

LIVE LOADS

D4 PROMENADE AND WAITING AREA: 5.0KPA DISTRIBUTED
4.5KN CONCENTRATED

D5 PONTOON AND GANGWAY: UNIFORM DISTRIBUTED LOAD 3.0 KPA
CONCENTRATED LOAD 4.5 KPA

VESSEL LOADS

D6 VESSELS
- CITY CAT DISPLACEMENT 26 TONS, 25M LOA, APPROACH VELOCITY = 0.3M/S
- CITYCAT ACCIDENTAL APPROACH VELOCITY = 3m/s AT 45° ANGLE TO BERTH
- CITY FERRIES (MONOHULL'S) DISPLACEMENT 12 TONS, 12M LOA APPROACH VELOCITY = 0.4M/S

D7 MOORING
22 DIAMETER POLYPROPYLENE ROPE 60KN BREAKING LOAD.

DEMOLITION

DM1. ALL MATERIAL TO BE DEMOLISHED SHALL BE DISPOSED OFF SITE, (AND NOT IN THE RIVER), IN ACCORDANCE TO THE SUPERINTENDENT'S REPRESENTATIVE DIRECTIONS. WHERE THERE ARE ANY PILE STUBS, THEY MUST BE COMPLETELY REMOVED. WHERE IT IS NOT POSSIBLE TO FULLY EXTRACT ANY OF THE PILES, THE PILES AND PILE STUBS MUST BE CUT OFF AT A LEVEL:-
» AT LEAST ONE (1) METRE BELOW THE BED LEVEL OF THE WATERWAY OR 600mm BELOW ANY EXPOSED LEVEL OF ROCK; OR
» AT A GREATER DEPTH THAN DETAILED ABOVE, IF REQUIRED BY THE REGIONAL HARBOUR MASTER.

CHART DATUM	A.H.D.	TIDAL RANGE (TIDE LEVEL IN METRES.)
2.87	1.675	HIGHEST ASTRONOMICAL TIDE (H.A.T.)
2.285	1.090	MEAN HIGH WATER SPRINGS (M.H.W.S.)
1.865	0.670	MEAN HIGH WATER NEAPS (M.H.W.N.)
1.300	0.105	MEAN SEA LEVEL
1.195	0.0	
0.795	-0.4	MEAN LOW WATER NEAPS (M.L.W.N.)
0.37	-0.825	MEAN LOW WATER SPRINGS (M.L.W.S.)
0.00	-1.195	PORT DATUM LOWEST ASTRONOMICAL TIDE (L.A.T.)

RIVER FLOOD LEVELS

FLOOD (ARI YRS)	REGATTA TERMINAL LEVELS IN METRES TO A.H.D.
25	5.0
100	5.38

FOR INFORMATION ONLY

RPECQ No. 22

No.	BY	DATE	DESCRIPTION	APPD
A		12.7.02	ISSUED FOR SECTION 46 APPROVAL	

Scales

BRISBANE CITY

Abigroup

Maunsell
Maunsell Australia Pty Ltd

COX
COX RAYNER

© COPYRIGHT THIS DRAWING AND DESIGN REMAINS THE PROPERTY OF MAUNSELL AUSTRALIA PTY LTD AND MAY NOT BE COPIED WITHOUT PRIOR WRITTEN APPROVAL FROM THIS COMPANY

THE SIGNING OF THIS TITLE BLOCK CONFIRMS THE DESIGN AND DRAWING OF THIS PROJECT HAVE BEEN PREPARED AND CHECKED IN ACCORDANCE WITH THE MAUNSELL AUSTRALIA QUALITY ASSURANCE SYSTEM CERTIFIED TO AS/NZS ISO 9001:1994

DESIGNED	CMD	CHECKED	DOL
DRAWN	PJT	CHECKED	DOL
APPROVED		DATE	

Cad ref: J:\HOME\1130202\Cad\REGATTA\Rg-S-003.dwg
Last modified: 12 Jul 02 - 12:48

Project Title: BRISBANE FERRY TERMINALS – CONTRACT No. K57/99/2001

Drawing Title: REGATTA FERRY TERMINAL GENERAL NOTES - SHEET 2

Status:

Dwg No. RG-S-003 A

82

BCC.133.0096

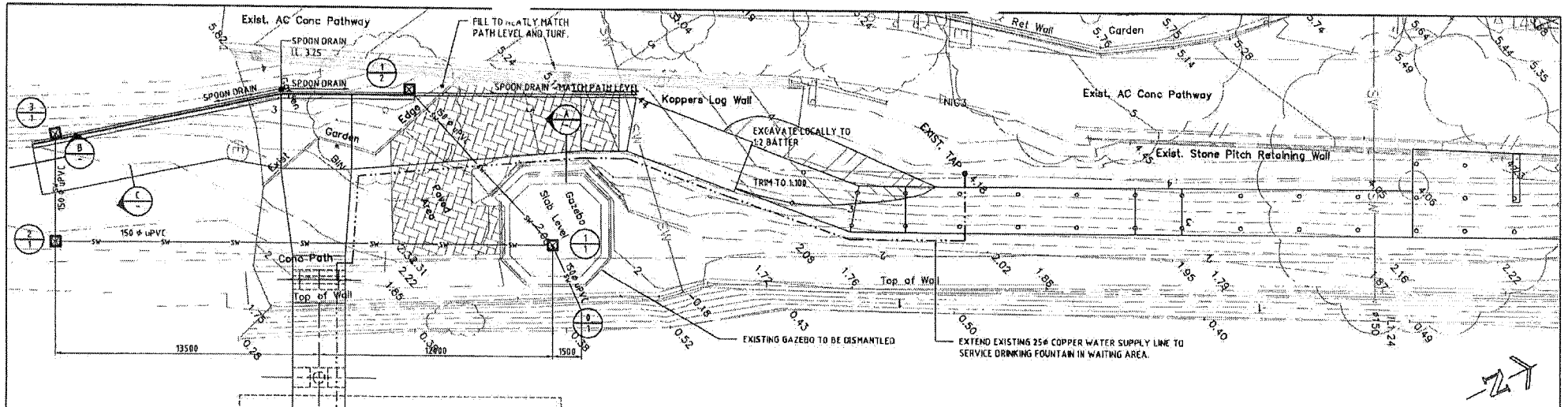

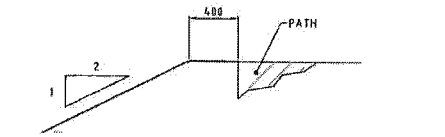

SECTION A
N.T.S.



SECTION B
N.T.S.

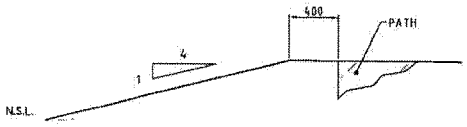

SECTION C
N.T.S.

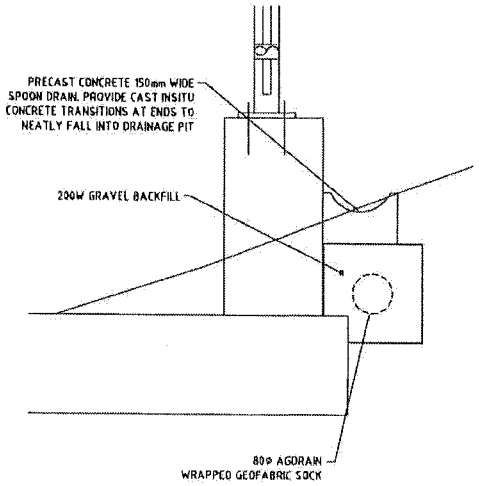

TYPICAL SECTION - SPOON DRAIN
N.T.S.

EXISTING SERVICES LOCATION OF EXISTING SHOWN ARE INDICATIVE ONLY AND THE CONTRACTOR SHALL BE RESPONSIBLE FOR THE LOCATION OF ALL EXISTING SERVICES ON SITE.

PIT SCHEDULE

No.	TYPE	S.L.	I.L.
3/1	1	2.250	1.650
2/1	1	2.000	1.400
1/1	2	2.350	1.200
1/2	1	3.075	2.475
0/1	OUTLET	2.100	1.050

TYPE 1 - EVERHARD SERIES 450 STORMWATER PIT WITH 155mm RISER (OR EQUAL) TO GIVE 600DP PIT
CLASS B (HEAVY DUTY) GALVANISED STEEL GRATE.
BACKFILL WITH 3:1 SAND CEMENT MIX

TYPE 2 - EVERHARD SERIES 600 STORMWATER PIT WITH OR EQUAL WITH 3 x 200mm RISERS TO GIVE 1200 DEEP PIT.
BACKFILL WITH 3:1 SAND CEMENT MIX, REINFORCED CONCRETE COVER STAMPED WITH "BCC - STORMWATER"

OUTLET - OUTLET CONNECTION NEATLY THROUGH EXISTING REVETMENT WALL.
PIPE TO BE FLUSH WITH FACE OF WALL. MAKE GOOD WALL SURFACE.

SW STORMWATER LINE

FOR INFORMATION ONLY

RPECQ No. 22

No.	BY	DATE	DESCRIPTION	APPD
A		12.1.02	ISSUED FOR SECTION 86 APPROVAL	

Scales
1 : 100 FULL SIZE A1

© COPYRIGHT THIS DRAWING AND DESIGN REMAINS THE PROPERTY OF MAUNSELL AUSTRALIA PTY LTD AND MAY NOT BE COPIED WITHOUT PRIOR WRITTEN APPROVAL FROM THIS COMPANY

THE SIGNING OF THIS TITLE BLOCK CONFIRMS THE DESIGN AND DRAFTING OF THIS PROJECT HAVE BEEN PREPARED AND CHECKED IN ACCORDANCE WITH THE MAUNSELL AUSTRALIA QUALITY ASSURANCE SYSTEM CERTIFIED TO AS/NZS ISO 9001:1994

DESIGNED	CMD	CHECKED	DDL
DRAWN	PJT	CHECKED	DDL
APPROVED		DATE	

Cad ref: J:\MMPLN\18702002\Cad\REGATTA\Rg-C-001.dwg
Last modified: 12 Jul 02 - 16:06

Project Title: BRISBANE FERRY TERMINALS – CONTRACT No. K57/99/2001
Drawing Title: REGATTA FERRY TERMINAL CIVIL WORKS
Status:
Dwg No. RG-C-001
Rev A

83

BCC.133.0097

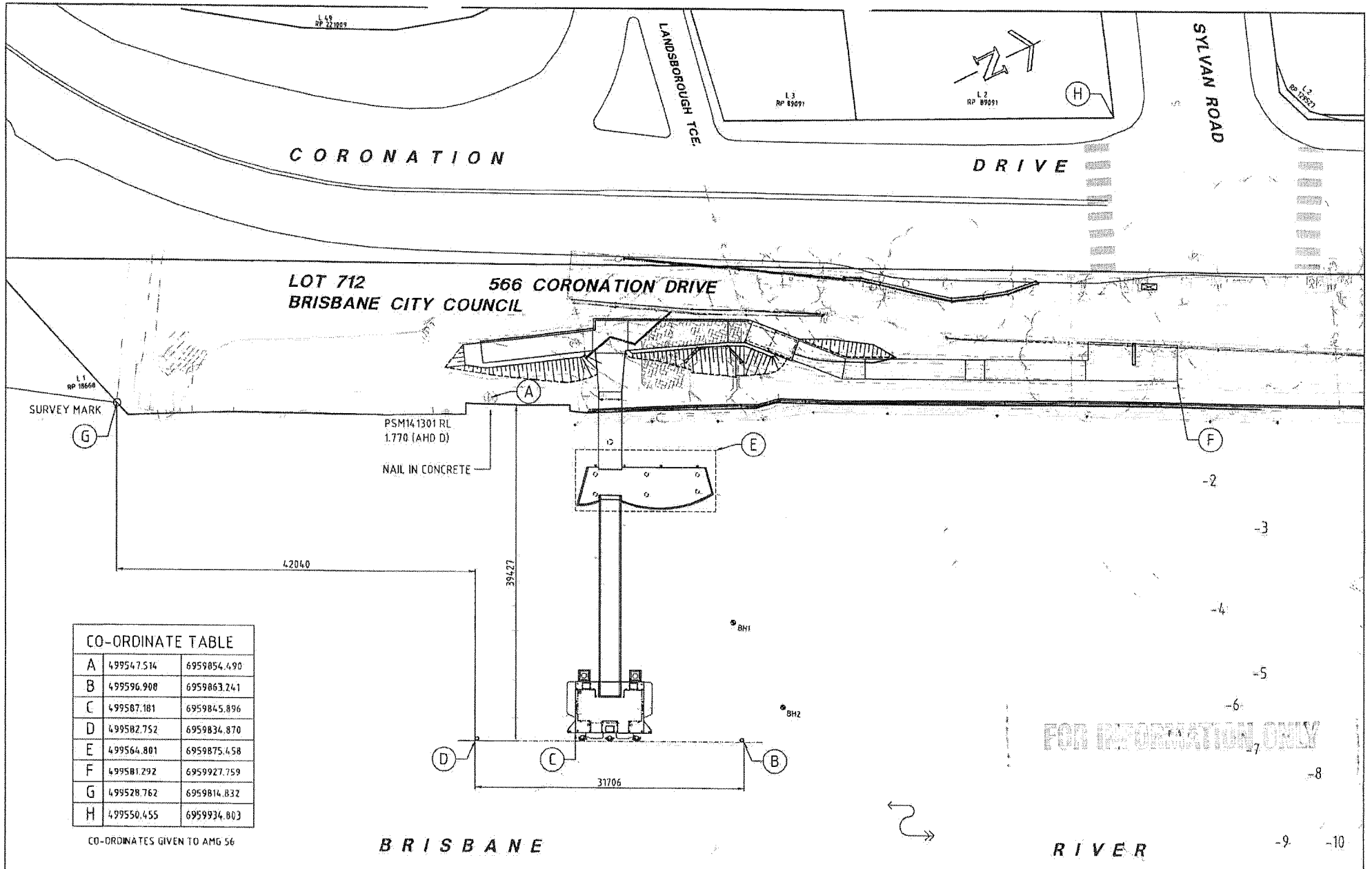

CO-ORDINATE TABLE		
A	499547.514	6959854.490
B	499596.908	6959863.241
C	499587.181	6959845.896
D	499582.752	6959834.870
E	499564.801	6959875.458
F	499581.292	6959927.759
G	499528.762	6959814.832
H	499550.455	6959934.803

CO-ORDINATES GIVEN TO AMG 56

RPECQ No. 22

No.	BY	DATE	DESCRIPTION	APPD
B		13.8.02	RE-ISSUED FOR SECTION 86 APPROVAL	
A		12.7.02	ISSUED FOR SECTION 86 APPROVAL	

Scales: 1 : 200 FULL SIZE A1

BRISBANE CITY

Abigroup

Maunsell

COX
COX RAYNER

© COPYRIGHT THIS DRAWING AND DESIGN REMAINS THE PROPERTY OF MAUNSELL AUSTRALIA PTY LTD AND MAY NOT BE COPIED WITHOUT PRIOR WRITTEN APPROVAL FROM THIS COMPANY

THE SIGNING OF THIS TITLE BLOCK CONTAINS THE DESIGN AND DRAFTING OF THIS PROJECT HAVE BEEN PREPARED AND CHECKED IN ACCORDANCE WITH THE MAUNSELL AUSTRALIA QUALITY ASSURANCE SYSTEM CERTIFIED TO AS/NZS ISO 9001-1994

DESIGNED	DDL	CHECKED	DDL
DRAWN	PJT	CHECKED	DDL
APPROVED		DATE	

Cad ref: J:\MMPL\10392002\Cad\REGATTA\Rg-RPD-001.dwg
Last modified: 15 Aug 02 - 12:24

Project Title: BRISBANE FERRY TERMINALS – CONTRACT No. K57/99/2001

Drawing Title: REGATTA FERRY TERMINAL
REAL PROPERTY BOUNDARIES

Status

Drg No. RG-RPD-001 Rev B

84

BCC.133.0098

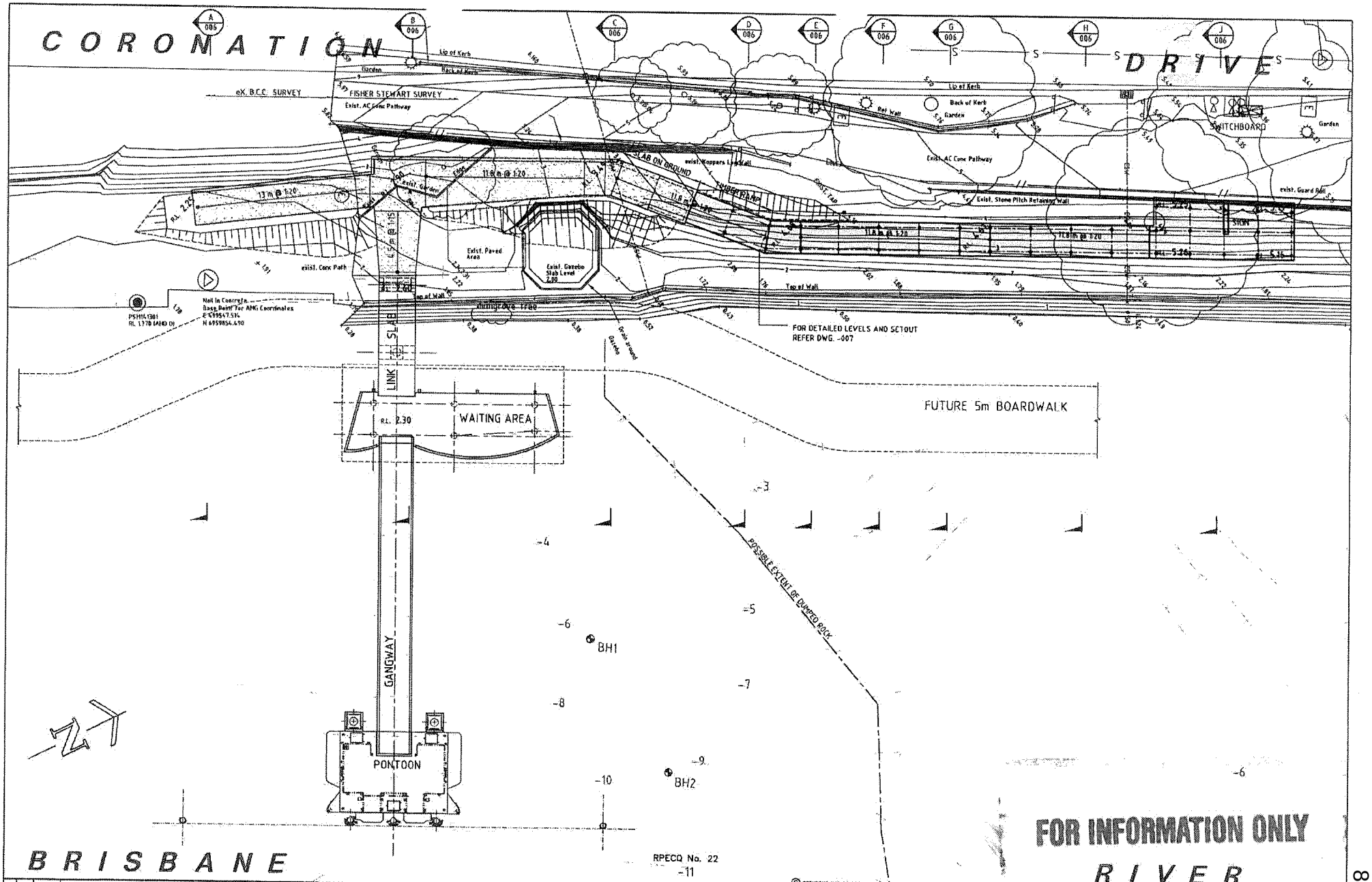

No.	BY	DATE	DESCRIPTION	APPD
D		13.8.02	RE-ISSUED FOR SECTION 86 APPROVAL	
C		6.8.02	TENDER ADDENDA	
B		1.8.02	ISSUED FOR TENDER	
A		12.7.02	ISSUED FOR SECTION 86 APPROVAL	

Scales: 1:125 — FULL SIZE A1

BRISBANE CITY

Abigroup

Maunsell

COX — COX RAYNER

© COPYRIGHT THIS DRAWING AND DESIGN REMAINS THE PROPERTY OF MAUNSELL AUSTRALIA PTY LTD AND MAY NOT BE COPIED WITHOUT PRIOR WRITTEN APPROVAL FROM THIS COMPANY

THE SIGNING OF THIS TITLE BLOCK CONFIRMS THE DESIGN AND DRAFTING OF THIS PROJECT HAVE BEEN PREPARED AND CHECKED IN ACCORDANCE WITH THE MAUNSELL AUSTRALIA QUALITY ASSURANCE SYSTEM CERTIFIED TO AS/NZS ISO 9001-1994

DESIGNED	CMD	CHECKED	DDL
DRAWN	PJT	CHECKED	DDL
APPROVED		DATE	

Cad ref: J:\PRPL\10302002\Cad\REGATTA\Rg-S-005.dwg
Last modified: 15 Aug 02 - 12:28

Project Title: BRISBANE FERRY TERMINALS – CONTRACT No. K57/99/2001

Drawing Title: REGATTA FERRY TERMINAL GENERAL ARRANGEMENT PLAN

Status

Drg No. RG-S-005 Rev D

FOR INFORMATION ONLY

BCC.133.0100

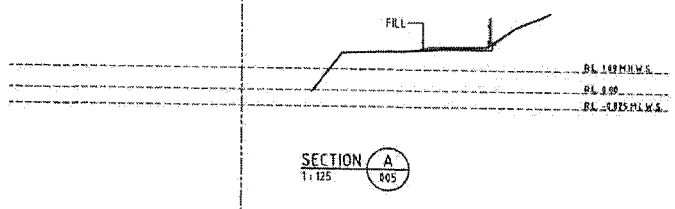

SECTION A
1 : 125 005

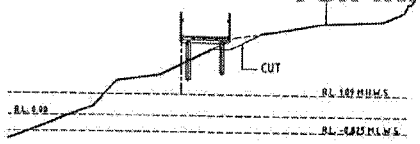

SECTION D
1 : 125 005

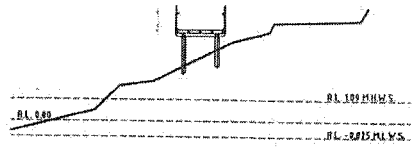

SECTION G
1 : 125 005

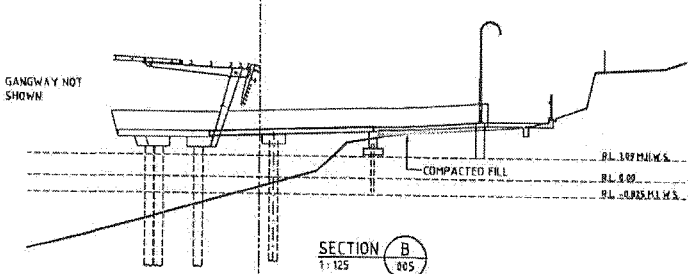

SECTION B
1 : 125 005

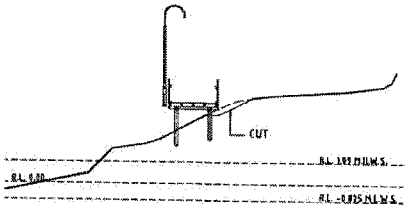

SECTION E
1 : 125 005

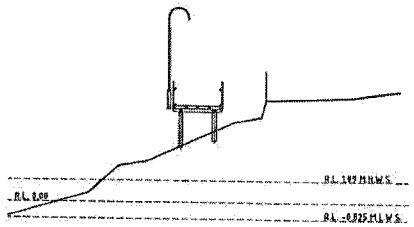

SECTION H
1 : 125 005

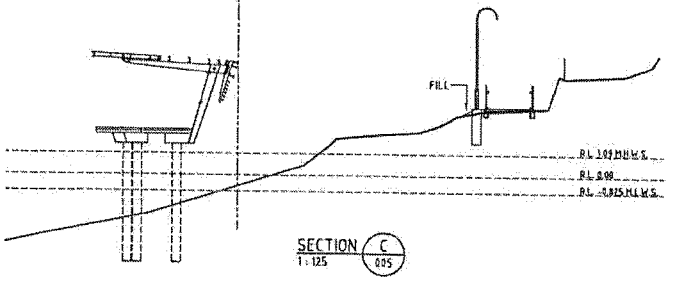

SECTION C
1 : 125 005

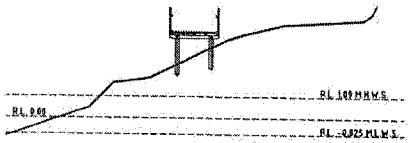

SECTION F
1 : 125 005

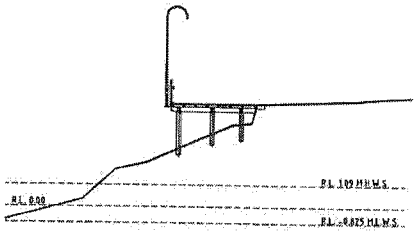

SECTION J
1 : 125 005

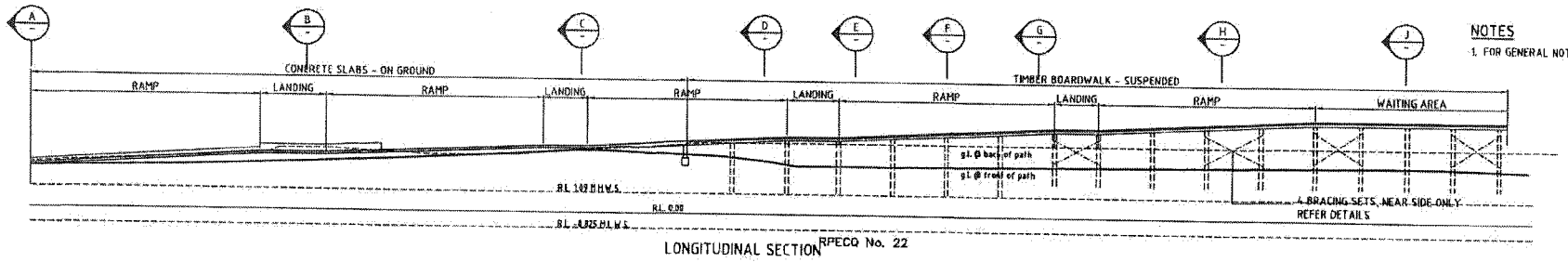

LONGITUDINAL SECTION RPECQ No. 22

NOTES

1. FOR GENERAL NOTES, REFER DWGS RG-S-002 AND 003.

No.	BY	DATE	DESCRIPTION	APPD
D		13.8.02	RE-ISSUED FOR SECTION 86 APPROVAL	
C		6.8.02	TENDER ADDENDA	
B		1.8.02	ISSUED FOR TENDER	
A		12.7.02	ISSUED FOR SECTION 86 APPROVAL	

Scales: 1:25 0 1.25 2.5 3.75 5.0 6.25m; 1 : 125 FULL SIZE A1

© COPYRIGHT THIS DRAWING AND DESIGN REMAINS THE PROPERTY OF MAUNSELL AUSTRALIA PTY LTD AND MAY NOT BE COPIED WITHOUT PRIOR WRITTEN APPROVAL FROM THIS COMPANY

THE SIGNING OF THIS TITLE BLOCK CONFIRMS THE DESIGN AND DRAFTING OF THIS PROJECT HAVE BEEN PREPARED AND CHECKED IN ACCORDANCE WITH THE MAUNSELL AUSTRALIA QUALITY ASSURANCE SYSTEM CERTIFIED TO AS/NZS ISO 9001:1994

DESIGNED	CHD	CHECKED	DDL
DRAWN	PJT	CHECKED	DDL
APPROVED		DATE	

Cad ref: JANMP1 \Cad\REGATTA\Rg-S-006.dwg
Last modified: 12

Project Title: BRISBANE FERRY TERMINALS – CONTRACT No. K57/99/2001

Drawing Title: REGATTA FERRY TERMINAL GENERAL ARRANGEMENT SECTIONS

Status

Dwg No. RG-S-006

6

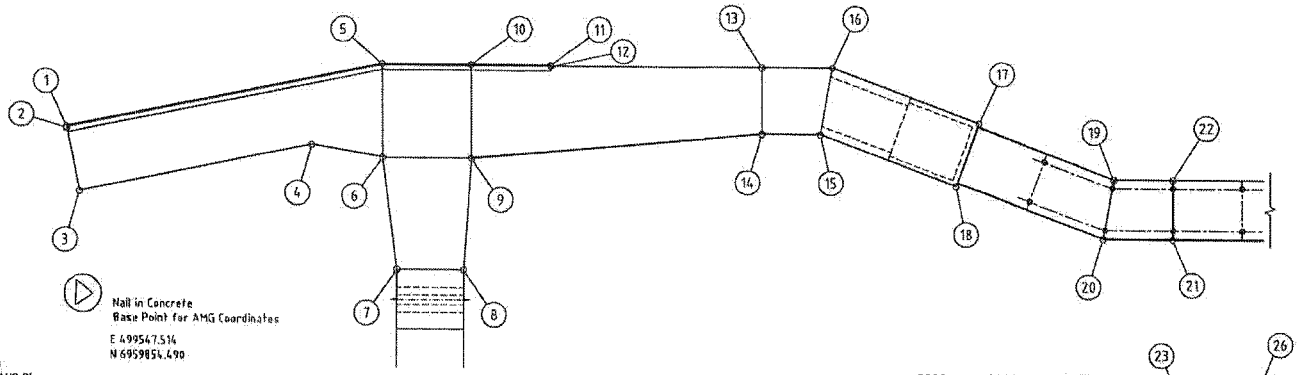

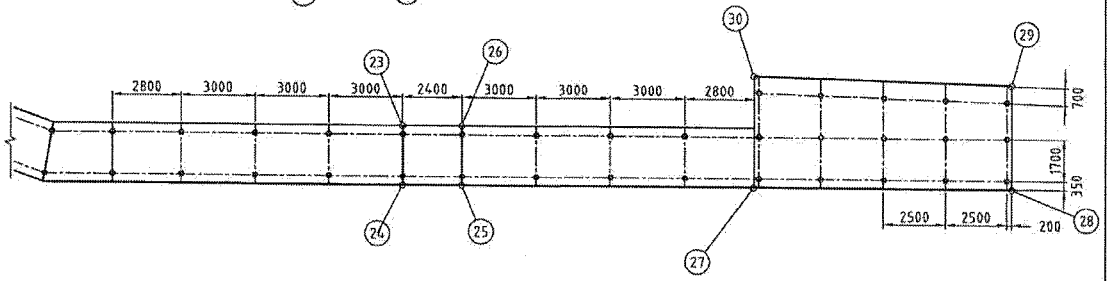

WALKWAY SETOUT TABLE

SETOUT No.	EASTING	NORTHING	
1	499541.220	6959856.879	
2	499541.268	6959856.867	
3	499543.782	6959856.203	
4	499546.228	6959865.462	
5	499544.550	6959869.482	
6	499547.952	6959867.790	
7	499552.239	6959866.304	
8	499553.445	6959868.720	
9	499549.560	6959871.012	
10	499546.159	6959872.708	
11	499547.603	6959875.601	
12	499547.647	6959875.578	
13	499551.473	6959883.244	
14	499553.888	6959882.039	
15	499554.948	6959884.162	
16	499552.749	6959885.802	
17	499557.390	6959890.147	
18	499559.235	6959888.176	
19	499561.799	6959894.070	
20	499563.754	6959892.613	
21	499565.018	6959895.146	
22	499562.871	6959896.218	
23	499571.783	6959892.462	
24	499573.930	6959891.390	
25	499575.002	6959893.538	
26	499572.854	6959894.609	
27	499580.270	6959904.096	
28	499584.935	6959913.445	
29	499581.174	6959915.322	} TO BE CONFIRMED ON SITE
30	499576.234	6959906.110	} TO BE CONFIRMED ON SITE

FOR INFORMATION ONLY

RPECQ No. 22

No.	BY	DATE	DESCRIPTION	APPD
A		12.7.02	ISSUED FOR SECTION 46 APPROVAL	

Scales
1 : 100 FULL SIZE A1

BRISBANE CITY

Abigroup

Maunsell
Maunsell Australia Pty Ltd

COX
COX RAYNER

© COPYRIGHT THIS DRAWING AND DESIGN REMAINS THE PROPERTY OF MAUNSELL AUSTRALIA PTY LTD AND MAY NOT BE COPIED WITHOUT PRIOR WRITTEN APPROVAL FROM THIS COMPANY

THE SIGNING OF THIS TITLE BLOCK CONFIRMS THE DESIGN AND DRAFTING OF THIS PROJECT HAVE BEEN PREPARED AND CHECKED IN ACCORDANCE WITH THE MAUNSELL AUSTRALIA QUALITY ASSURANCE SYSTEM CERTIFIED TO AS/NZS ISO 9001-1994

DESIGNED	CMD	CHECKED	ODL
DRAWN	PJC	CHECKED	ODL
APPROVED		DATE	

Cad ref: J:\PPPL\10302802\Cad\REGATTA\Rg-S-007.dwg
Last modified: 12 Jul 02 - 12:52

Project Title
BRISBANE FERRY TERMINALS – CONTRACT No. K57/99/2001

Drawing Title
REGATTA FERRY TERMINAL
GENERAL ARRANGEMENT
ON-LAND SETTING OUT

Status

Dwg No. RG-S-007

Rev A

87

BCC.133.0101

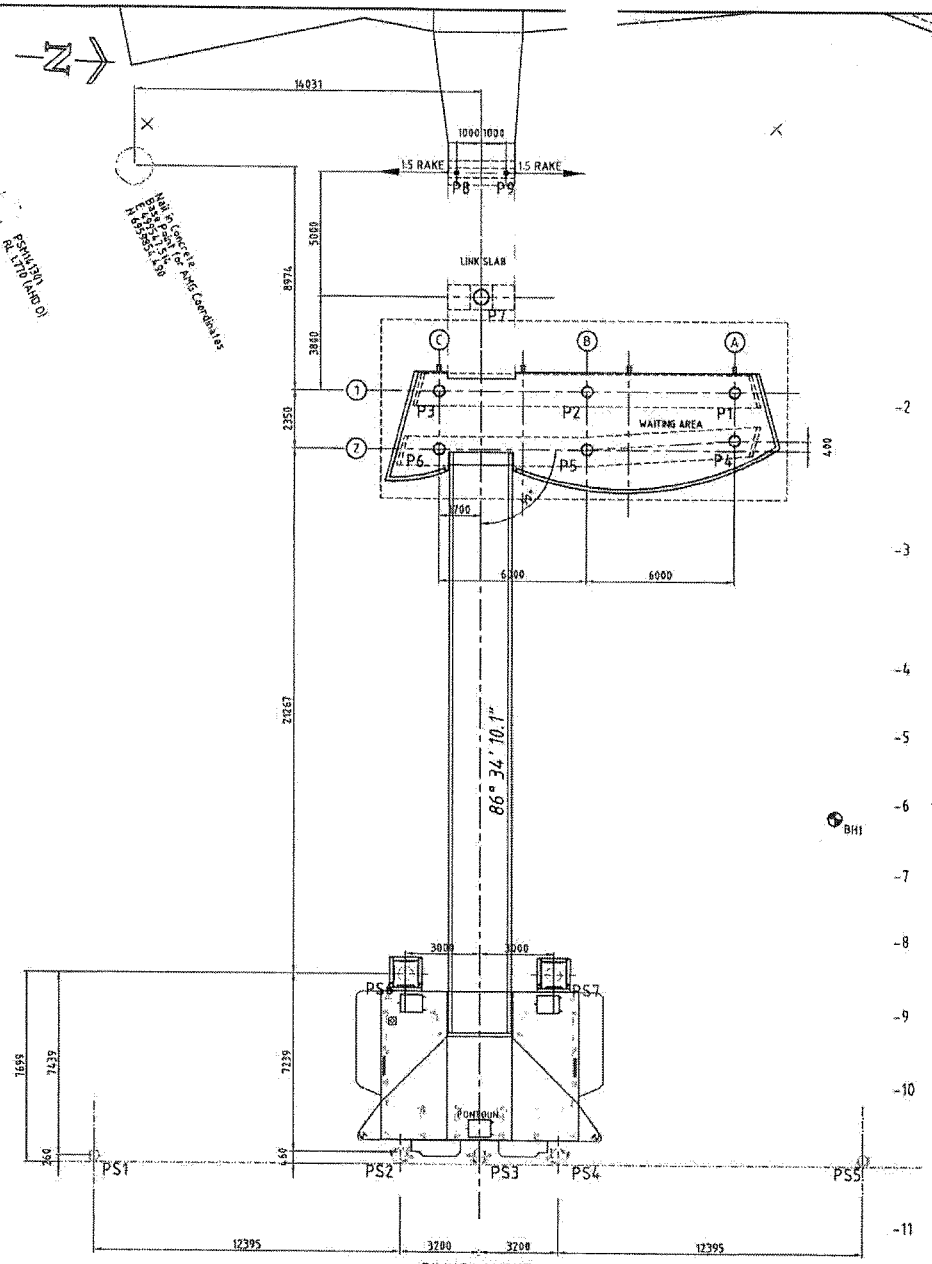

PILING LAYOUT
1:100

STEEL PILING SCHEDULE – WAITING AREA

PILE SCHEDULE
ALL LEVELS GIVEN IN METRES TO A.H.D.

MARK	PILE SIZE - GRADE (MPa)	CUT-OFF LEVEL	GROUND OR BED LEVEL	ESTIMATED TOE LEVEL	MINIMUM TOE LEVEL	ULTIMATE CAPACITY (REFER NOTE) kN	SAFE WORKING LOAD kN
P1	ϕ457 x 12.7 GRADE 350	1.6	- 1.5	-11.5	-11.0	900	N/A
P2	ϕ457 x 12.7 GRADE 350	1.6	- 1.5	-11.5	-11.0	900	N/A
P3	ϕ457 x 12.7 GRADE 350	1.6	- 1.5	-11.5	-11.0	900	N/A
P4	ϕ457 x 12.7 GRADE 350	1.6	- 2.0	-11.5	-11.0	900	N/A
P5	ϕ457 x 12.7 GRADE 350	1.6	- 2.0	-11.5	-11.0	900	N/A
P6	ϕ457 x 12.7 GRADE 350	1.6	- 2.0	-11.5	-11.0	900	N/A
P7	ϕ610 x 12.7 GRADE 250✳	1.68	- 0.5	-9.5	-9.5	600	N/A
P8	1680 x 7.1 SCREW PILE	1.700	1.2	-8.0	-5.0	N/A	150
P9	1680 x 7.1 SCREW PILE	1.700	1.2	-8.0	-5.0	N/A	150

STEEL PILING SCHEDULE – PONTOON

– REFER DRAWING RG-011 AND RG-012 FOR STEEL PILE DETAILS

PILE SCHEDULE
ALL LEVELS GIVEN IN METRES TO A.H.D.

MARK	PILE SIZE - GRADE (MPa)	PILE TYPE	CUT-OFF LEVEL	GROUND OR BED LEVEL	MINIMUM TOE LEVEL
PS1	ϕ406.7x 12.7 GRADE 405	A	3.60	- 11.0	-20.0
PS2	ϕ406.7x 12.7 GRADE 405	B1	9.40	- 11.0	-20.0
PS3	ϕ406.7x 12.7 GRADE 405	B3	9.40	- 11.0	-20.0
PS4	ϕ406.7x 12.7 GRADE 405	B2	9.40	- 11.0	-20.0
PS5	ϕ406.7x 12.7 GRADE 405	D	3.60	- 11.0	-20.0
PS6	ϕ610x 12.7 GRADE 250✳	C	9.40	- 9.3	-20.0
PS7	ϕ610x 12.7 GRADE 250✳	C	9.40	- 9.3	-20.0

✳ ALTERNATE SIZE : 600ϕ x 16 w.t. ASTM A252-2

NOTES

1. TOE LEVELS ARE ESTIMATED ONLY FROM AVAILABLE GEOTECHNICAL INFORMATION.
2. "ULTIMATE PILE CAPACITY" IN THE TABLES HAS BEEN SPECIFIED IN ACCORDANCE WITH AS 2159-1995 AND CORRESPONDS TO THE MINIMUM TEST VALUE TO BE ACHIEVED BY HILEY CALCULATION. A REDUCTION FACTOR OF 0.5 HAS BEEN INCORPORATED.
3. THE STEEL PILES ARE TO BE INSTALLED TO THE "MINIMUM TOE LEVEL" AS SHOWN ON THE DRAWINGS TO ACHIEVE LATERAL CAPACITY. IF UNABLE TO ACHIEVE, PREDRILL OR ROCK SOCKET MINIMUM 2 DIA INTO DISTINCTLY WEATHERED OR BETTER ROCK.
4. GROUND OR BED LEVELS INFERRED FROM SURVEY DATA.
5. SCREW PILES TO HAVE PROTECTIVE COATING OVER TOP 4.0 m SECTION OF PILE WITH TWO COATS OF 200 MICRON HIGH BUILD EPOXY. (TOTAL THICKNESS 400 MICRONS)
   INTERNATIONAL PROTECTIVE COATINGS - INTERGUARD 278 OR
   JOTUN AUSTRALIA - JOTACOAT 605GF
6. SCREW PILES SHALL BE INSTALLED IN ACCORDANCE WITH THE MANUFACTURER'S SPECIFICATION TO A DEPTH SUFFICIENT TO DEVELOP THE SAFE WORKING LOAD AND MINIMUM TOE DEPTHS SHOWN IN THE TABLE.

FOR INFORMATION ONLY



PILES P1 - P6 PILE P7

SECTION A
1:20

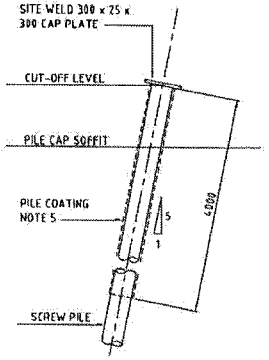

SCREW PILE DETAIL
1:20

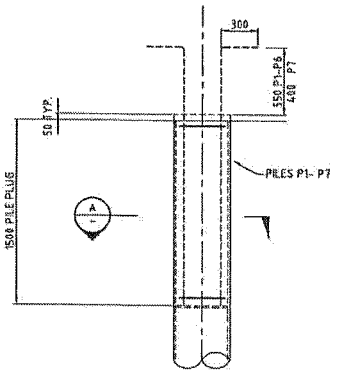

PILE PLUG DETAIL
N.T.S.

RPECQ No. 22

© COPYRIGHT THIS DRAWING AND DESIGN REMAINS THE PROPERTY OF MAUNSELL AUSTRALIA PTY LTD AND MAY NOT BE COPIED WITHOUT PRIOR WRITTEN APPROVAL FROM THIS COMPANY

No.	BY	DATE	DESCRIPTION	APPD
B		12.7.02	ISSUED FOR SECTION 88 APPROVAL	
A		7.7.00	TENDER EARLY WORKS	

Scales
1 : 20 FULL SIZE A1
1 : 100 FULL SIZE A1

THE SIGNING OF THIS TITLE BLOCK CONFIRMS THAT DESIGN AND DRAWING OF THIS PROJECT HAVE BEEN PREPARED AND CHECKED IN ACCORDANCE WITH THE MAUNSELL AUSTRALIA QUALITY ASSURANCE SYSTEM CERTIFIED TO AS/NZS ISO 9001-1994

DESIGNED	CMD	CHECKED	DDL
DRAWN	PJT	CHECKED	DDL
APPROVED		DATE	

Last modified: 3/03

Project Title: BRISBANE FERRY TERMINALS – CONTRACT No. K57/99/2001
Drawing Title: REGATTA FERRY TERMINAL
PILING LAYOUT AND SCHEDULES
Status
Dwg No. RG-S-010
Rev B

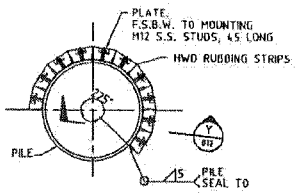

SECTION A
SCALE 1:10

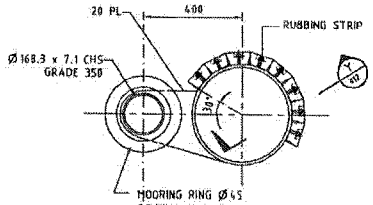

SECTION E
SCALE 1 : 10

UNLESS NOTED OTHERWISE:

ALL FURNITURE AND FITTINGS FOR PILES TO BE INSTALLED IN ACCORDANCE WITH THE SUPERINTENDENTS REPRESENTATIVES INSTRUCTIONS FOLLOWING PILE INSTALLATION.

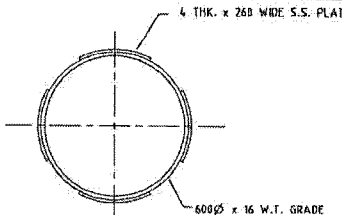

SECTION F
SCALE 1 : 10

NOTE: IF 610 PILE IS USED INSTEAD OF THE 600 DIA PILE THEN DETAILS NEED TO BE AMENDED TO SUIT DIFFERENT DIAMETER

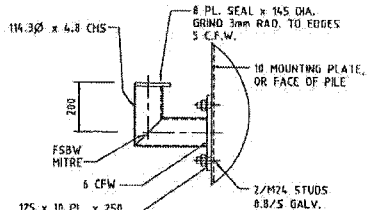

DETAIL 1
1 : 10

PILE BOLLARD

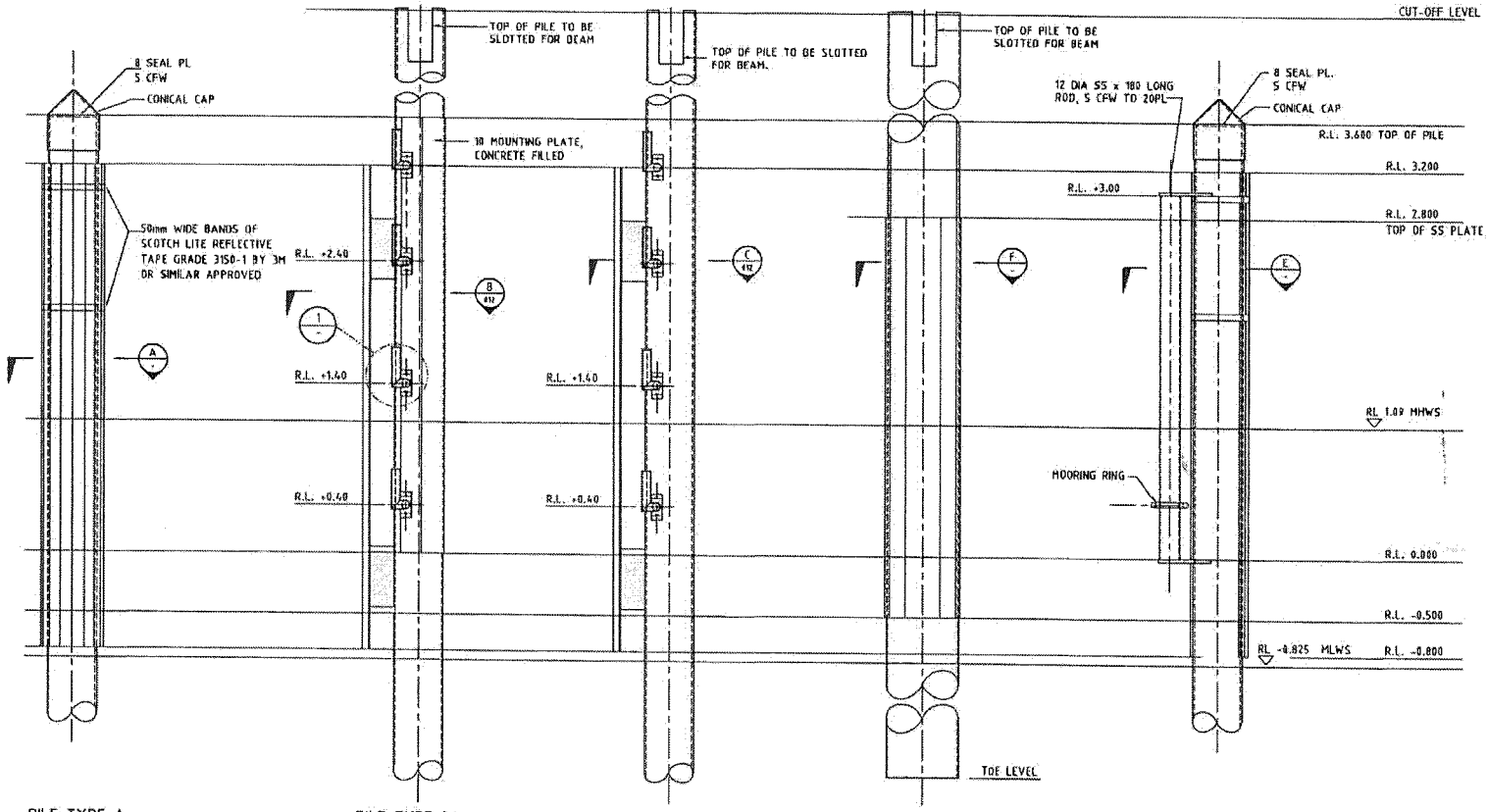

PILE TYPE A
1:20

PILE TYPE B1
B2 OPPOSITE HAND
1:20

PILE TYPE B3
1:20

PILE TYPE C
1:20

PILE TYPE D
1:20

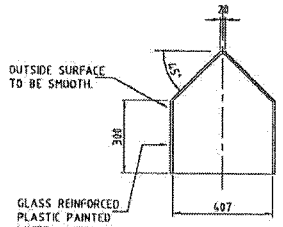

PILE CONICAL CAP
1 : 10

FOR INFORMATION ONLY

NOTES

1. FOR GENERAL NOTES REFER TO DWGS. RG-002 AND RG-003
2. FOR PILING SCHEDULES REFER DWG. RG-010
3. ALL STEEL PILES TO RECEIVE A PROTECTIVE COATING AS SPECIFIED TO A LEVEL 3m BELOW RIVERBED
4. REFLECTIVE TAPE TO BE APPLIED TO PILE TYPES A AND B ALL AROUND PILE AT LEVELS OF +2m AHD +3m AHD.
5. REFLECTIVE TAPE TO BE APPLIED AS DISCRETE PATCHES TO EACH TIMBER (NOT AS ONE PIECE WRAPPED AROUND THE FACE OF ALL THE TIMBERS)- TIMBER TO BE SANDED AND SEALED UNDER THE TAPE, BEFORE PRIMING ETC. AS PER THE MANUFACTURERS INSTRUCTIONS.

RPECQ No. 22

No.	BY	DATE	DESCRIPTION	APPD
B		17.7.02	ISSUED FOR SECTION 86 APPROVAL	
A		2.7.02	TENDER EARLY WORKS	

Scales
1 : 20 FULL SIZE A1
1 : 10 FULL SIZE A1

© COPYRIGHT THIS DRAWING AND DESIGN REMAINS THE PROPERTY OF MAUNSELL AUSTRALIA PTY LTD AND MAY NOT BE COPIED WITHOUT PRIOR WRITTEN APPROVAL FROM THIS COMPANY

THE SIGNING OF THIS TITLE BLOCK CONFIRMS THE DESIGN AND DRAFTING OF THIS PROJECT HAVE BEEN PREPARED AND CHECKED IN ACCORDANCE WITH THE MAUNSELL AUSTRALIA QUALITY ASSURANCE SYSTEM CERTIFIED TO AS/NZS ISO 9001:1994

DESIGNED	CMD	CHECKED	DDL
DRAWN	PJT	CHECKED	DDL
APPROVED		DATE	

Cad ref: J:\UNSPL\16302002\Cad\REGATTA\Rg-S-011.dwg
Last modified: 17 Jul 02 - 13:04

Project Title: BRISBANE FERRY TERMINALS — CONTRACT No. K57/99/2001
Drawing Title: REGATTA FERRY TERMINAL PILE AND FENDER DETAILS - SHEET 1
Status:
Dwg No. RG-S-011
Rev B

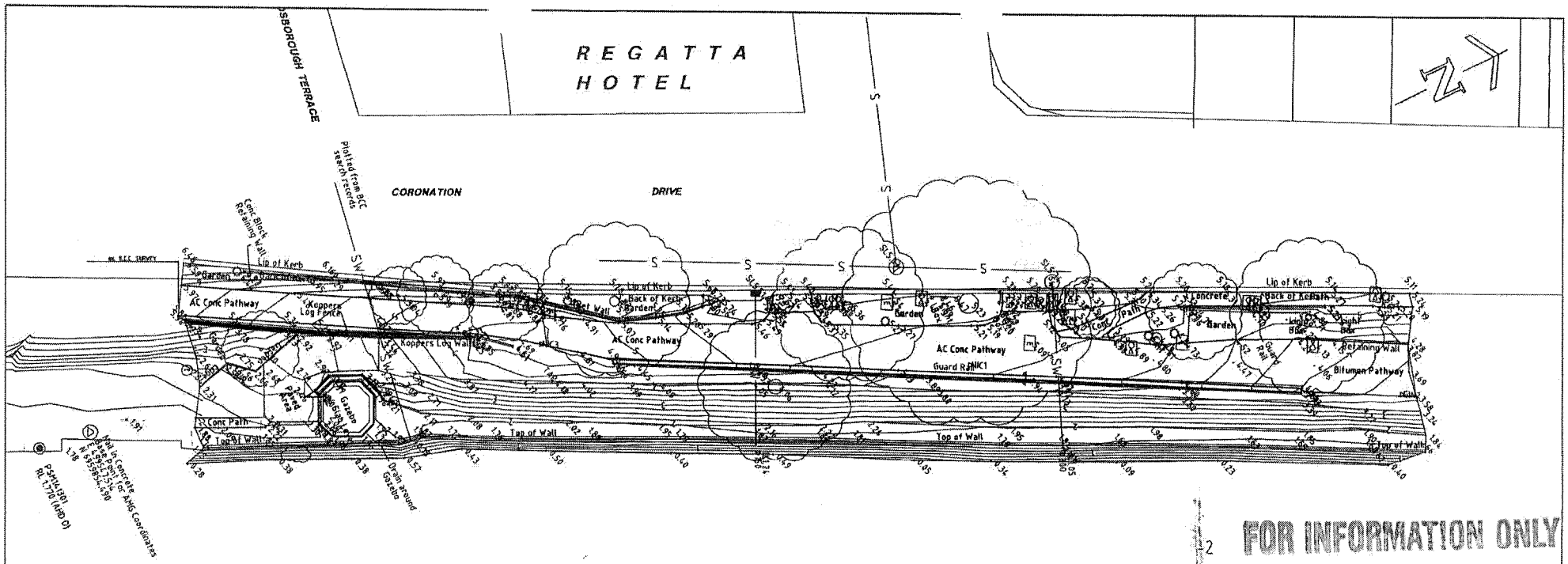

FOR INFORMATION ONLY

RIVER BED CONTOURS SUPPLIED BY MAPPING HYDROGRAPHIC SURVEYS PTY. LTD.

FISHER STEWART QUEENSLAND PTY LTD should be contacted should field set out be required resulting from works derived from this detail plan.

Surface indication of services shown hereon have been located, where possible, by field survey.

Prior to any demolition, excavation or construction on the site, the relevant authority should be contacted for possible location of further underground services and detailed locations of all services.

SERVICES

ELECTRICITY
Energex search provided by Dial Before service from Energex.

TELECOMMUNICATIONS
Telecommunications search provided by Dial Before You Dig service from Telstra Corporation, Uecomm Limited, and PowerTel.

GAS
Gas search provided by Dial before You Dig Service from Origin Energy.

STORM WATER
Storm Water search provided by Dial before You Dig Service from Brisbane City Council.

WATER
Water Supply search provided by Dial Before You Dig service from Brisbane City Council

SEWER
Sewer is outside the subject survey zone. Manhole not filled.
Sewer search provided by Dial Before You Dig service from Brisbane City Council.

NOTES

CADASTRAL
Cadastral boundaries are from BCC supplied data.
Property corners not remarked at time of survey.

LEVEL DATUM
Level Datum is AHD
Origin of Levels : PSM 141301
Contour Interval is 0.25 metres.

COORDINATES
Datum is AMG Bearing & plane distances centred on Nail in Concrete as shown on plan.
AMG Coordinates derived by GPS from PM21712
E 499411.003
N 6960224.171

This plan is for design purposes only. Not to be used for construction.

LEGEND TO SYMBOLS

	BENCH MARK		ELECTRICITY PILLAR
	PERMANENT MARK		ELECTRICITY PIT
	WATER VALVE		POWER POLE
	FIRE HYDRANT		STREET LIGHT
	WATER METER		STREET LIGHT/POWER POLE
	SIGN		TRANSFORMER ON POLE
	TRAFFIC LIGHTS		TELSTRA PILLAR
	TRAFFIC SIGNAL PIT		TELSTRA PIT
	TRAFFIC SIGNAL CONTROL BOX		SEWERAGE MANHOLE
	STORMWATER MIXES	SOB	SEWER OD/VENT
	BULLY TRAP		GAS VALVE
	FIELD GULLY TRAP		COMPUTER CABLE BOX
	ROOFWATER DOWN PIPE		WATER MAIN
	STORM WATER		COMPUTER CABLES
	SEWER MAIN		TELSTRA CONDUIT
	GAS MAIN		ELECTRICITY

RPECQ No. 22

© COPYRIGHT THIS DRAWING AND DESIGN REMAINS THE PROPERTY OF MAUNSELL AUSTRALIA PTY LTD AND MAY NOT BE COPIED WITHOUT PRIOR WRITTEN APPROVAL FROM THIS COMPANY

No.	BY	DATE	DESCRIPTION	APPD
A		12.7.02	ISSUED FOR SECTION 86 APPROVAL	

Scales
1 : 200 FULL SIZE A1

Abigroup

Maunsell
Maunsell Australia Pty Ltd
COX
COX RAYNER

THE SIGNING OF THIS TITLE BLOCK CONTAINS THE DESIGN AND DRAFTING OF THIS PROJECT HAVE BEEN PREPARED AND CHECKED IN ACCORDANCE WITH THE MAUNSELL AUSTRALIA QUALITY ASSURANCE SYSTEM CERTIFIED TO AS/NZS ISO 9001-1994

DESIGNED	CMD	CHECKED	DDL
DRAWN	PJT	CHECKED	DDL
APPROVED		DATE	

Cad ref: J:\PHH\ \Cad\REGATTA\Rg-S-015.dwg
Last modified: 05

Project Title: BRISBANE FERRY TERMINALS – CONTRACT No. K57/99/2001

Drawing Title: REGATTA FERRY TERMINAL SURVEY PLAN

Status:

Drg No. RG-S-015 Rev. A

BCC.133.0104

06

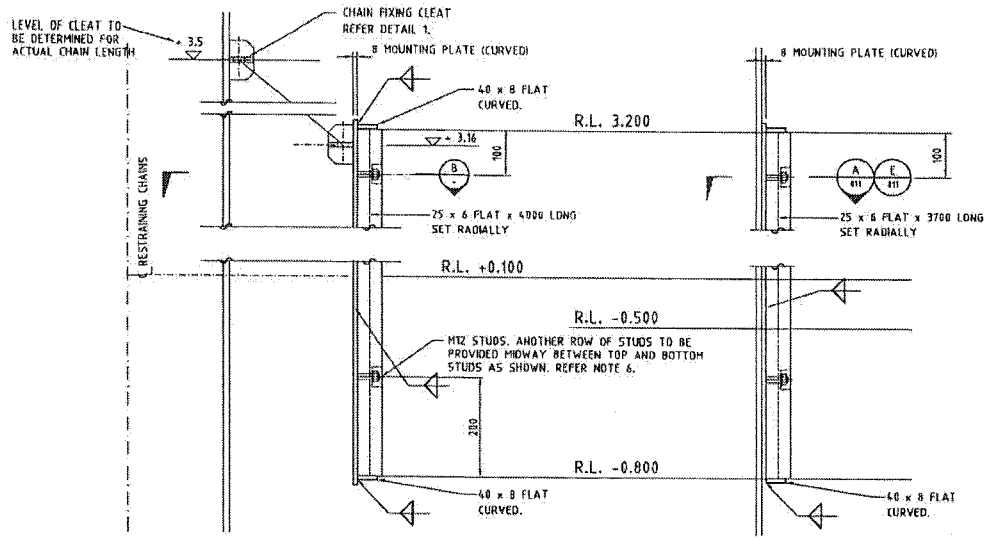

SECTION X
SCALE 1:5

SECTION Y
SCALE 1:5
DETAILS AS PER SECTION X U.N.O.

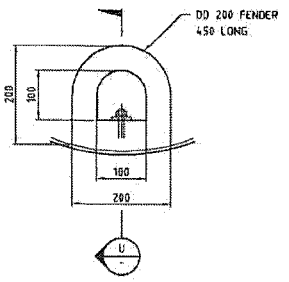

FENDER DETAILS
1:5

NOTE: 1 ROW OF 3 FENDERS CENTRED AT RL 2.5m AND 1 ROW OF 3 FENDERS CENTRED AT RL -0.2m.

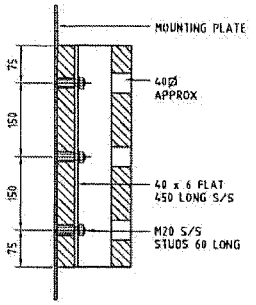

SECTION U
SCALE 1:5

NOTES

1. FOR GENERAL NOTES, REFER DWGS. RG-002 AND RG-003
2. ALL WELDS SHALL BE FULL PENETRATION BUTT WELDS UNLESS NOTED OTHERWISE
3. RESTRAINING CHAINS TO CONSIST OF 2 No 3.2t SWL ALLOY SHACKLES (SCREW PIN DEE) CHAIN WITH ONE LINK OF 20mm PROOF COIL CHAIN (MEDIUM LINKS) ALL HD GALV. NOMINAL LENGTH 194mm)
4. STUDS TO BE TAPED AND SEALED DURING PAINTING AND TOUCHED UP WITH PAINT AFTER BOLTS TIGHTENED.
5. SUPPORT CHAINS TO CONSIST OF 1 No 3.2t SWL ALLOY SHACKLES (SCREW PIN DEE) CHAIN WITH THREE LINKS OF 20mm PROOF COIL CHAIN (MEDIUM LINKS) ALL HD GALV. NOMINAL LENGTH 340mm)
6. STUDS TO BE GALVANISED EXCEPT BOTTOM ROW TO BE STAINLESS STEEL

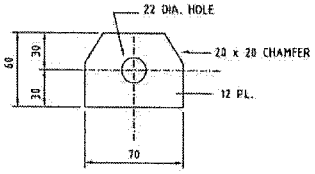

DETAIL 1 CHAIN FIXING CLEAT
SCALE 1:2

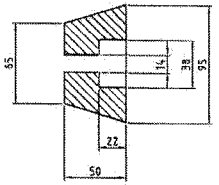

RUBBING STRIP - TURPENTINE
DETAIL AT STUD FIXING
SCALE 1:2

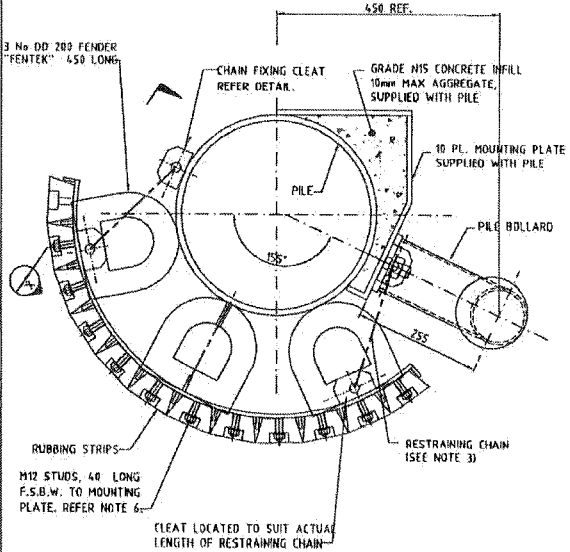

SECTION B
SCALE 1:5

PILE TYPES B1, B2

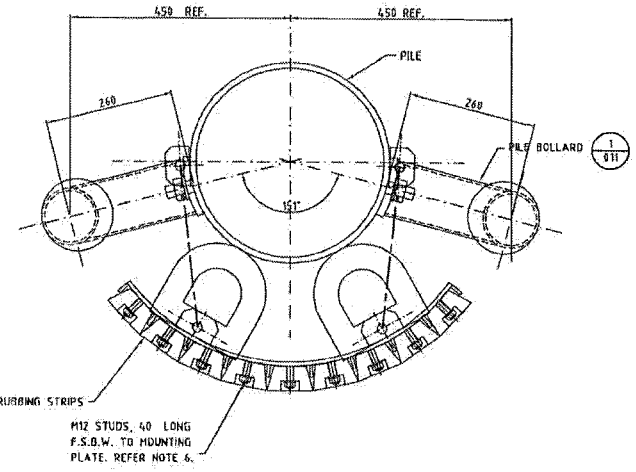

SECTION C
SCALE 1:5

PILE TYPE PB2

FOR INFORMATION ONLY

No.	BY	DATE	DESCRIPTION	APPD
B		12.7.02	ISSUED FOR SECTION 84 APPROVAL	
A		2.7.02	TENDER EARLY WORKS	

Scale: 50 0 100 200mm, 1:5 FULL SIZE A1

© COPYRIGHT THIS DRAWING AND DESIGN REMAINS THE PROPERTY OF MAUNSELL AUSTRALIA PTY LTD AND MAY NOT BE COPIED WITHOUT PRIOR WRITTEN APPROVAL FROM THIS COMPANY

THE SIGNING OF THIS TITLE BLOCK CONFIRMS THE DESIGN AND DRAWING OF THIS PROJECT HAVE BEEN PREPARED AND CHECKED IN ACCORDANCE WITH THE MAUNSELL AUSTRALIA QUALITY ASSURANCE SYSTEM CERTIFIED TO AS/NZS ISO 9001 : 1994

DESIGNED	CMD	CHECKED	DDL
DRAWN	PJT	CHECKED	DDL
APPROVED		DATE	

Cad ref: J:\BNPL\19302H02\Cad\REGATTA\Rg-S-012.dwg
Last modified: 12 Jul 02 - 13:05

Project Title: BRISBANE FERRY TERMINALS – CONTRACT No. K57/99/2001

Drawing Title: REGATTA FERRY TERMINAL
PILE AND FENDER DETAILS - SHEET 2

Status:

Dwg No.: RG-S-012

Rev: B

BCC.133.0105

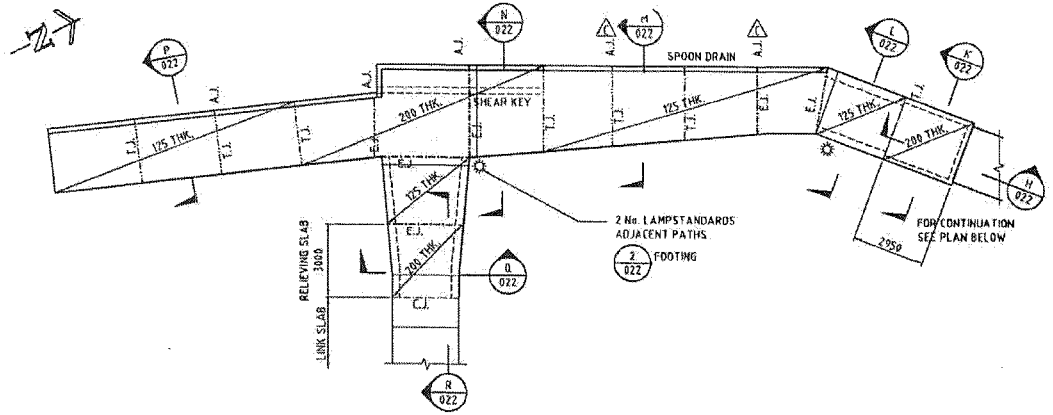

LAYOUT PLAN - SLABS ON GROUND

1:100

PROVIDE 25 SETDOWN IN SLABS FOR TACTILE PAVERS, REFER ARCHITECT FOR LOCATIONS

E.J. DENOTES EXPANSION JOINT

T.J. DENOTES TOOLED JOINT

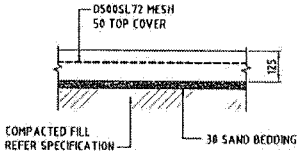

TYPICAL SLAB DETAILS, U.N.O.

1:10

MEMBER SCHEDULE	
MARK	DESCRIPTION
a.	150 X 75 BEARER
b.	200 x 75 BEARER
c.	150 x 75 JOIST (CONTINUOUS)
d.	150 x 50 HWD. NOGGING
e.	M16 TIE ROD
f.	150 x 50 x 5.0 RHS

NOTES

1. FOR GENERAL NOTES REFER DWGS. RG-S-002 AND RG-S-003.
2. FOR SETOUT AND LEVELS REFER DWG. RG-S-007.
3. TIMBER DECKING:
   120 x 35 'OUTDOOR STRUCTURES' DECKWOOD FIXED TO JOISTS WITH No. 14 PREDRILLED S.S. SCREWS.
   INITIAL GAP BETWEEN DECKING PLANKS TO BE 1mm.
4. CONCRETE SLABS TO HAVE BROOM FINISH.
5. FOR LOCATION OF BALUSTRADE STANCHIONS AND TACTILE PAVERS, REFER ARCHITECT.

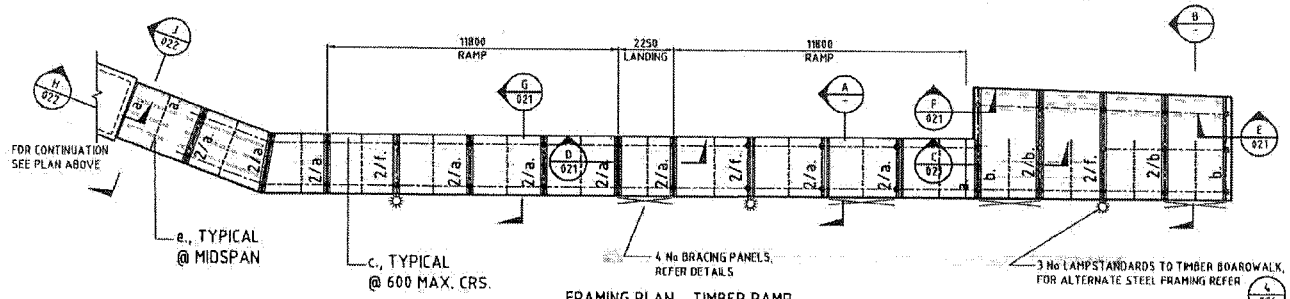

FRAMING PLAN - TIMBER RAMP

1:100

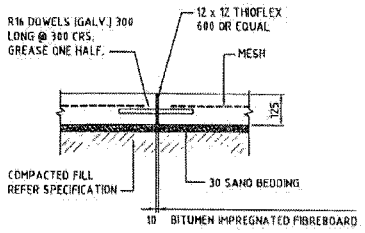

EXPANSION JOINT E.J.

1:10

A.J. ARTICULATION JOINT SIMILAR

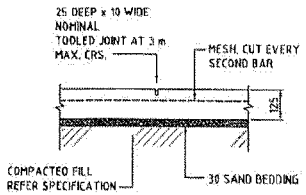

TOOLED JOINT T.J.

1:10

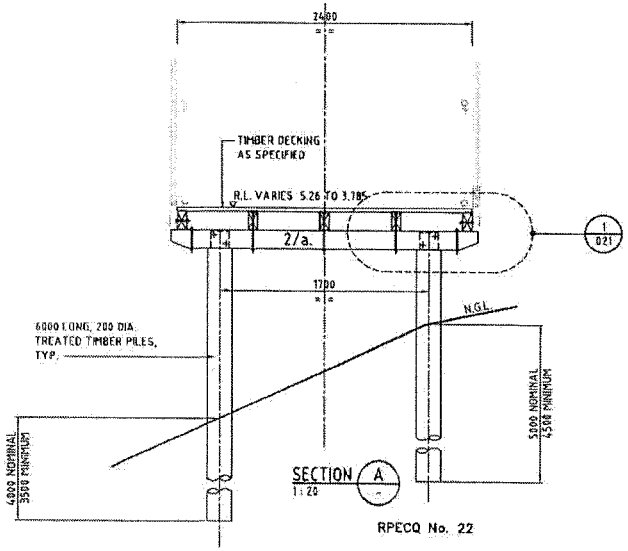

SECTION A

1:20

RPECQ No. 22

FOR INFORMATION ONLY

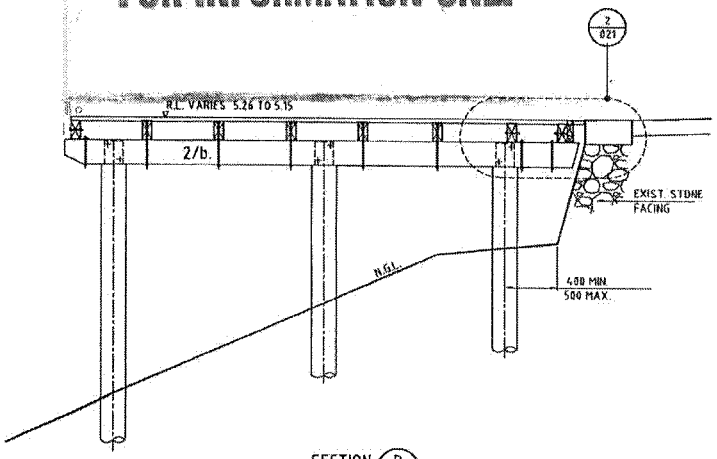

SECTION B

1:20

© COPYRIGHT THIS DRAWING AND DESIGN REMAINS THE PROPERTY OF MAUNSELL AUSTRALIA PTY LTD AND MAY NOT BE COPIED WITHOUT PRIOR WRITTEN APPROVAL FROM THIS COMPANY

No.	BY	DATE	DESCRIPTION	APPD
D		13.8.02	RE-ISSUED FOR SECTION 86 APPROVAL	
C		6.8.01	TENDER ADDENDA	
B		1.8.01	ISSUED FOR TENDER	
A		12.7.01	ISSUED FOR SECTION 86 APPROVAL	

Scales: 1 : 100 FULL SIZE A1

Maunsell Australia Pty Ltd

COX RAYNER

DESIGNED	CMD	CHECKED	DDL
DRAWN	PJT	CHECKED	DDL
APPROVED		DATE	

Last modified 12:29

Project Title: BRISBANE FERRY TERMINALS - CONTRACT No. K57/99/2001

Drawing Title: REGATTA FERRY TERMINAL RAMPS AND PAVING SLABS SHEET 1

Status | Dwg No. RG-S-020 | Rev D

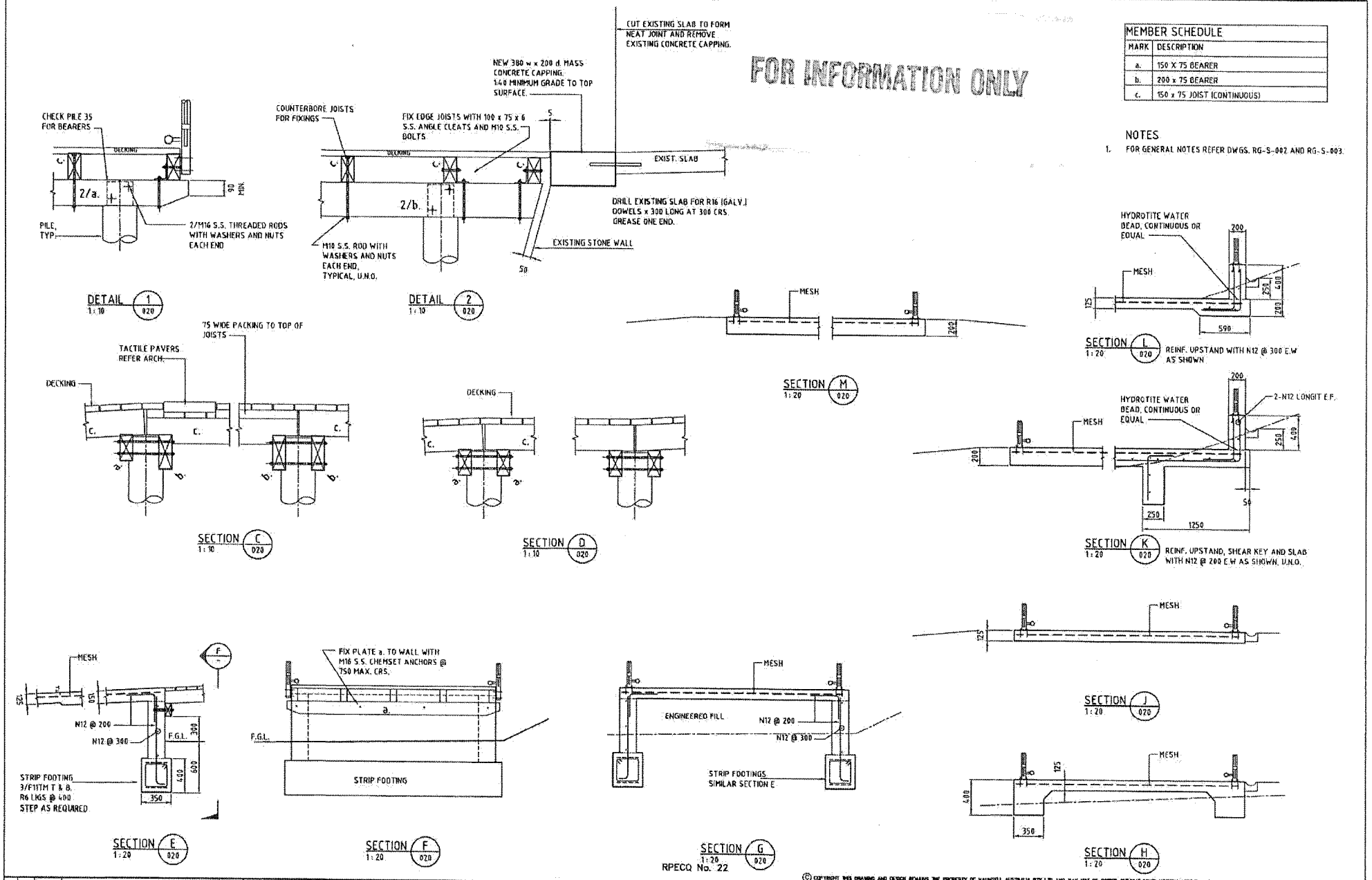

MEMBER SCHEDULE	
MARK	DESCRIPTION
a.	150 X 75 BEARER
b.	200 x 75 BEARER
c.	150 x 75 JOIST (CONTINUOUS)

NOTES

1. FOR GENERAL NOTES REFER DWGS. RG-S-002 AND RG-S-003.

No.	BY	DATE	DESCRIPTION	APPD
A		12.7.02	ISSUED FOR SECTION 86 APPROVAL	

Scales: 1:100 FULL SIZE A1

BRISBANE CITY

Abigroup

Maunsell

COX COX RAYNER

© COPYRIGHT THIS DRAWING AND DESIGN REMAINS THE PROPERTY OF MAUNSELL AUSTRALIA PTY LTD AND MAY NOT BE COPIED WITHOUT PRIOR WRITTEN APPROVAL FROM THIS COMPANY

THE SIGNING OF THIS TITLE BLOCK CONTAINS THE DESIGN AND DRAFTING OF THIS PROJECT HAVE BEEN PREPARED AND CHECKED IN ACCORDANCE WITH THE MAUNSELL AUSTRALIA QUALITY ASSURANCE SYSTEM CERTIFIED TO AS/NZS ISO 9001-1994

DESIGNED	CMD	CHECKED	DDL
DRAWN	PJT	CHECKED	DDL
APPROVED		DATE	

Cad ref: J:\MMPL\19392002\Cad\REGATTA\Rg-S-021.dwg
Last modified: 12 Jul 02 - 15:04

Project Title: BRISBANE FERRY TERMINALS – CONTRACT No. K57/99/2001

Drawing Title: REGATTA FERRY TERMINAL RAMPS AND PAVING SLABS SHEET 2

Status

Drg No. RG-S-021 Rev A

93

BCC.133.0107

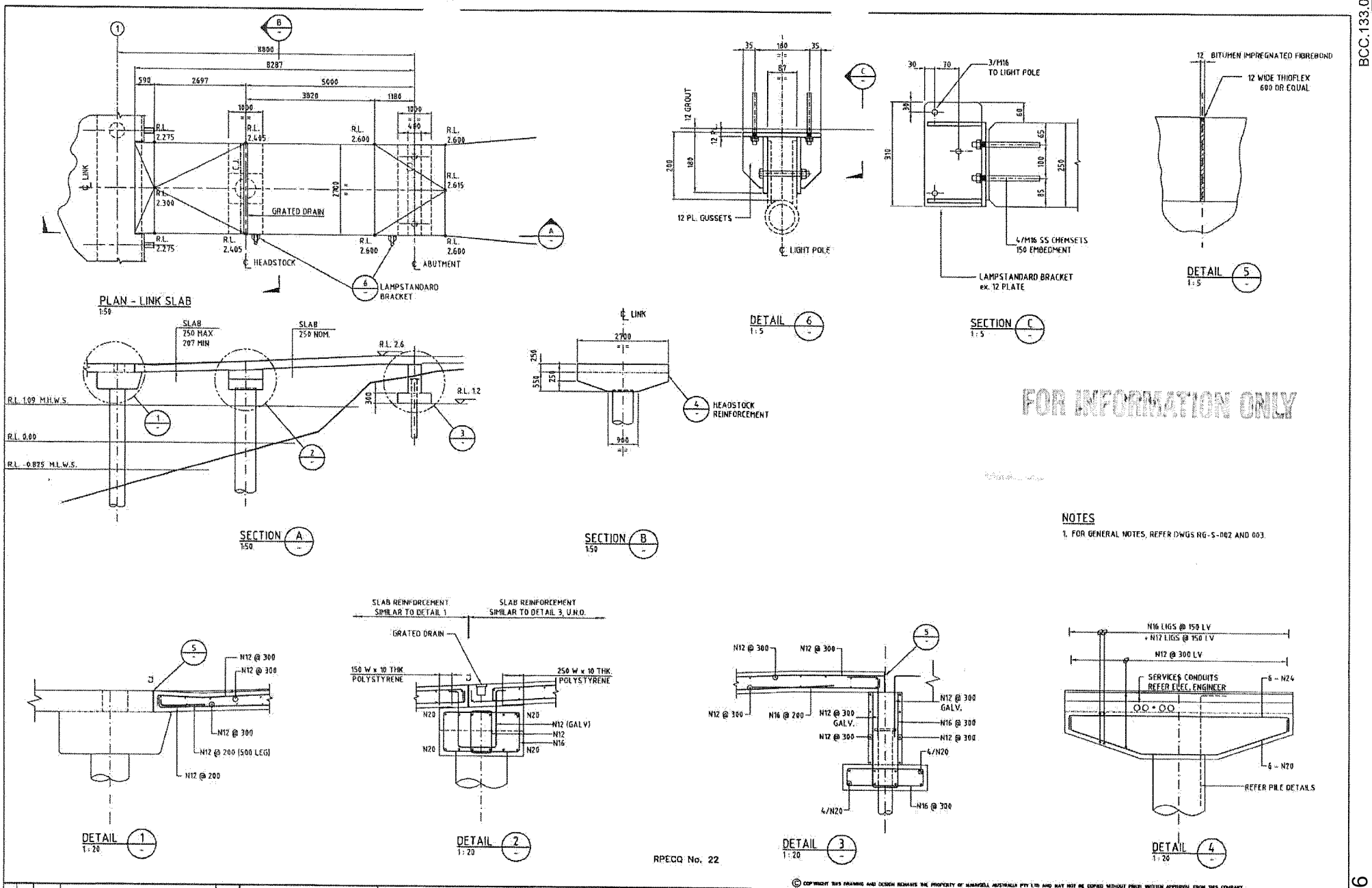

FOR INFORMATION ONLY

NOTES

1. FOR GENERAL NOTES, REFER DWGS RG-S-002 AND 003.

RPECQ No. 22

No.	BY	DATE	DESCRIPTION	APPD
D		13.8.02	RE-ISSUED FOR SECTION 86 APPROVAL	
C		6.8.02	TENDER ADDENDA	
B		1.8.02	ISSUED FOR TENDER	
A		17.7.02	ISSUED FOR SECTION 86 APPROVAL	

Scales: 1:5 FULL SIZE A1; 1:20 FULL SIZE A1; 1:50 FULL SIZE A1

Abigroup

Maunsell

COX

© COPYRIGHT THIS DRAWING AND DESIGN REMAINS THE PROPERTY OF MAUNSELL AUSTRALIA PTY LTD AND MAY NOT BE COPIED WITHOUT PRIOR WRITTEN APPROVAL FROM THIS COMPANY

THE SIGNING OF THIS TITLE BLOCK DOMINING THE DESIGN AND DRAFTING OF THIS PROJECT HAVE BEEN PREPARED AND CHECKED IN ACCORDANCE WITH THE MAUNSELL AUSTRALIA QUALITY ASSURANCE SYSTEM CERTIFIED TO AS/NZS ISO 9001-1994

DESIGNED	CMD	CHECKED	DDL
DRAWN	PJC	CHECKED	DDL
APPROVED		DATE	

Project Title: BRISBANE FERRY TERMINALS – CONTRACT No. K57/99/2001

Drawing Title: REGATTA FERRY TERMINAL LINK SLAB - ARRANGEMENT

Status

Drg No. RG-S-030 Rev D

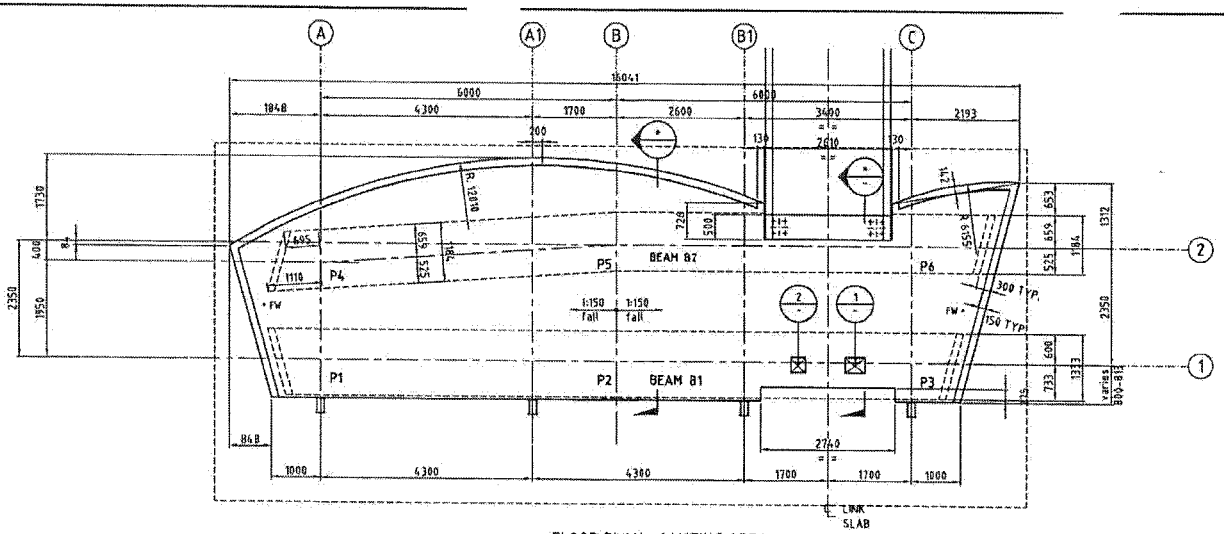

FLOOR PLAN - WAITING AREA
1:50

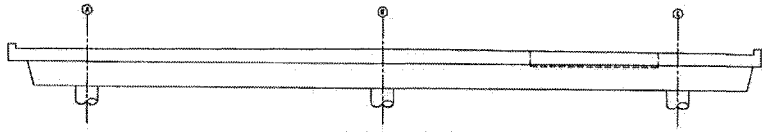

ELEVATION - BEAM B2
1:50

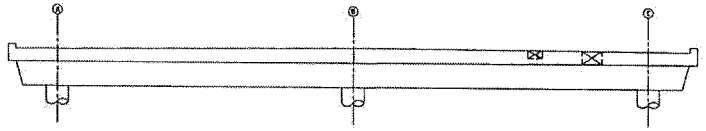

ELEVATION - BEAM B1
1:50

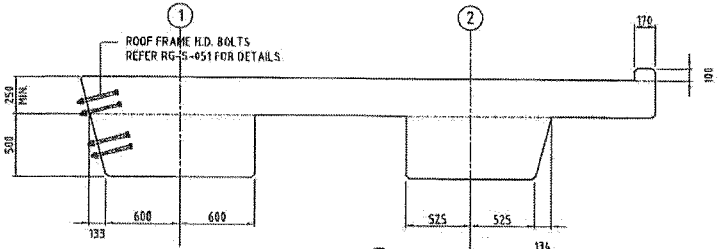

SECTION A
1:20

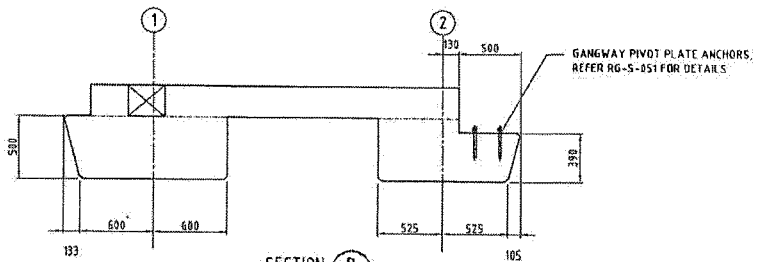

SECTION B
1:20

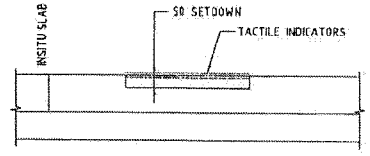

SLAB SETDOWN FOR TACTILES (TYP)
1:10
(REFER ARCH. DRAWINGS FOR LOCATION OF TACTILES)

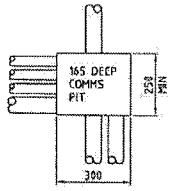

DETAIL 2
1:10
ELECTRICAL PIT WITH TACTILES ADHERED TO REMOVABLE LID

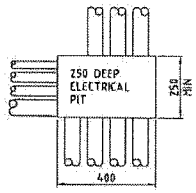

DETAIL 1
1:10
COMMUNICATION PIT WITH TACTILES ADHERED TO REMOVABLE LID

FOR INFORMATION ONLY

NOTE
FW - FLOOR WASTE REFER SPECIFICATION AND NOMINAL 100Ø PVC PIPE CAST INTO PLANKS WITH 1-Y12 500 LONG LOCATED EACH LEG OF AN EQUAL TRIANGLE AROUND HOLE IN INSITU-SLAB
DP - 50Ø HOLE CAST BELOW DRINKING FOUNTAIN AS WATER OUTLET

RPECQ No. 22

No.	BY	DATE	DESCRIPTION	APPD
A		17.7.02	ISSUED FOR SECTION 86 APPROVAL	

Scales
1:10 FULL SIZE A1
1:20 FULL SIZE A1
1:50 FULL SIZE A1

BRISBANE CITY

Abigroup

Maunsell
Maunsell Australia Pty Ltd
COX
COX RAYNER

© COPYRIGHT THIS DRAWING AND DESIGN REMAINS THE PROPERTY OF MAUNSELL AUSTRALIA PTY LTD AND MAY NOT BE COPIED WITHOUT PRIOR WRITTEN APPROVAL FROM THIS COMPANY

THE SIGNING OF THIS TITLE BLOCK CONFIRMS THE DESIGN AND DRAFTING OF THIS PROJECT HAVE BEEN PREPARED AND CHECKED IN ACCORDANCE WITH THE MAUNSELL AUSTRALIA QUALITY ASSURANCE SYSTEM CERTIFIED TO AS/NZS ISO 9001-1994

DESIGNED	CMD	CHECKED	DDL
DRAWN	PJT	CHECKED	DDL
APPROVED		DATE	

Cad ref: A:\MMPL\10302002\Cad\REGATTA\RG-S-040.dwg
Last modified: 12 Jul 02 - 13:14

Project Title: BRISBANE FERRY TERMINALS - CONTRACT No. K57/99/2001

Drawing Title: REGATTA FERRY TERMINAL WAITING AREA - ARRANGEMENT

Status

Drg No. RG-S-040 Rev. A

95

BCC.133.0109

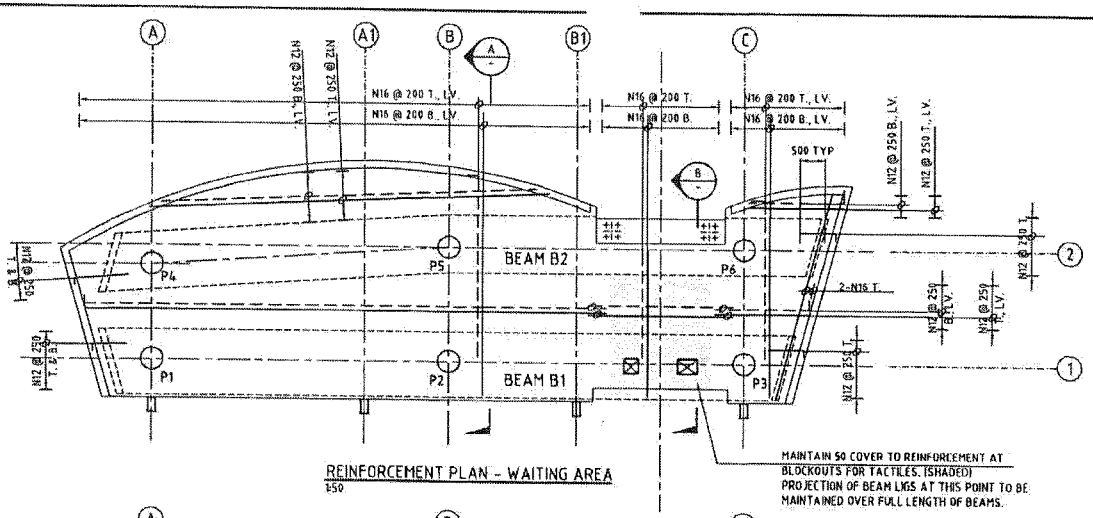

REINFORCEMENT PLAN - WAITING AREA
1:50

MAINTAIN 50 COVER TO REINFORCEMENT AT BLOCKOUTS FOR TACTILES. (SHADED) PROJECTION OF BEAM LEGS AT THIS POINT TO BE MAINTAINED OVER FULL LENGTH OF BEAMS.

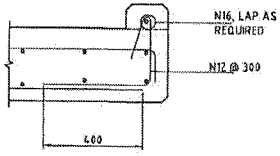

TYPICAL UPSTAND DETAIL
1:10

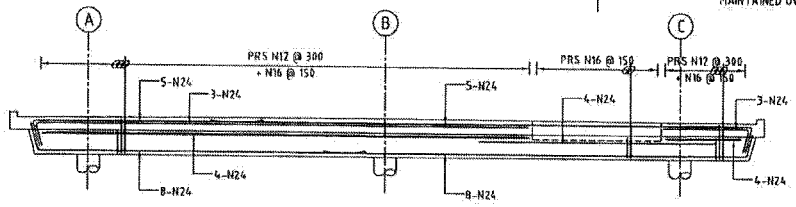

ELEVATION - BEAM B2
1:50

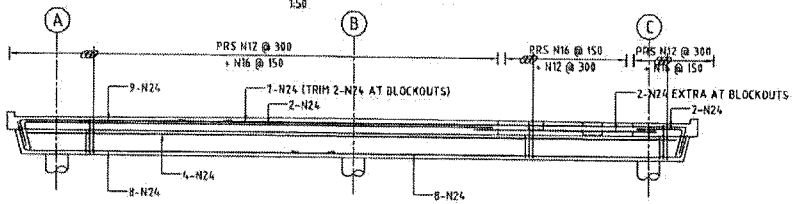

ELEVATION - BEAM B1
1:50

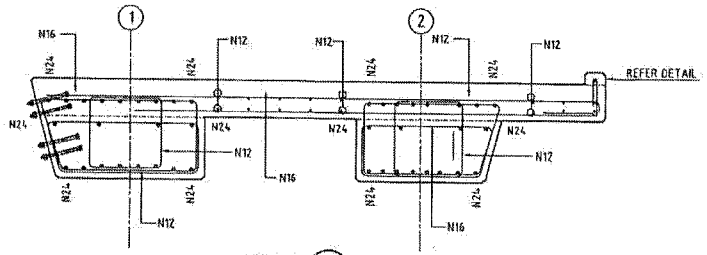

SECTION A
1:20

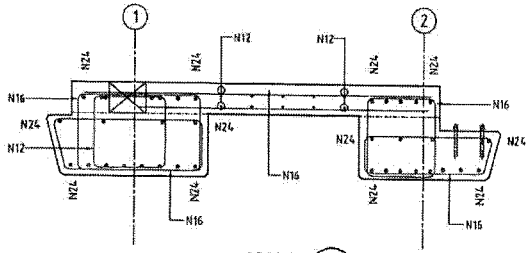

SECTION B
1:20

FOR INFORMATION ONLY

RPECQ No. 22

© COPYRIGHT THIS DRAWING AND DESIGN REMAINS THE PROPERTY OF MAUNSELL AUSTRALIA PTY LTD AND MAY NOT BE COPIED WITHOUT PRIOR WRITTEN APPROVAL FROM THIS COMPANY

No.	BY	DATE	DESCRIPTION	APPD
A		12.7.02	ISSUED FOR SECTION 86 APPROVAL	

Scales
1 : 10 FULL SIZE A1
1 : 20 FULL SIZE A1
1 : 50 FULL SIZE A1

BRISBANE CITY

Abigroup

Maunsell
Maunsell Australia Pty Ltd
COX
COX RAYNER

THE SIGNING OF THIS TITLE BLOCK CONFIRMS THE DESIGN AND DRAFTING OF THIS PROJECT HAVE BEEN PREPARED AND CHECKED IN ACCORDANCE WITH THE MAUNSELL AUSTRALIA QUALITY ASSURANCE SYSTEM CERTIFIED TO AS/NZS ISO 9001:1994

DESIGNED	CMD	CHECKED	DDL
DRAWN	PJT	CHECKED	DDL
APPROVED		DATE	

Cad ref: A:\MMPL\13030021\Cad\REGATTA\RG-S-041.dwg
Last modified: 12 Jul 02 - 13:15

Project Title: BRISBANE FERRY TERMINALS – CONTRACT No. K57/99/2001

Drawing Title: REGATTA FERRY TERMINAL
WAITING AREA - DETAILS SHEET 1

Status

Dwg No. RG-S-041

Rev A

96

BCC.133.0110

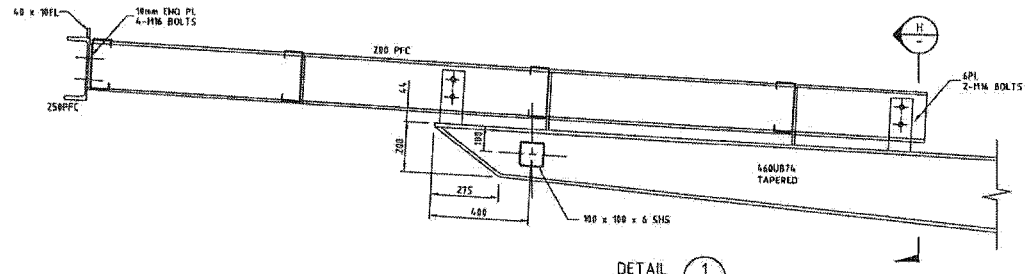

DETAIL 1 1:10

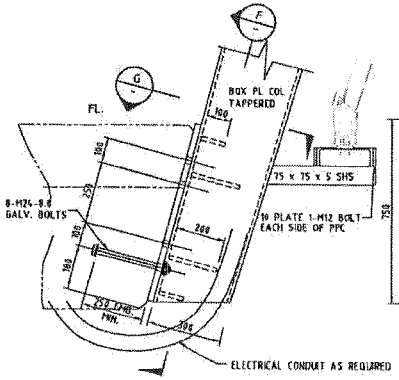

DETAIL 3 1:10

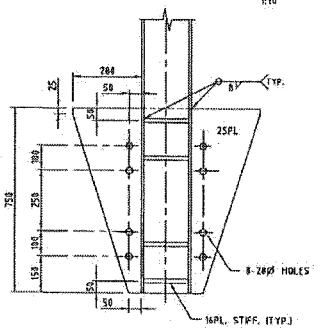

SECTION F 1:10

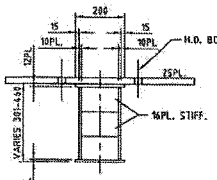

SECTION G 1:10

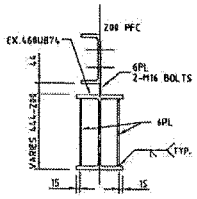

SECTION H 1:10

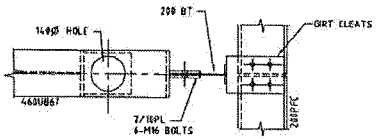

SECTION E 1:10

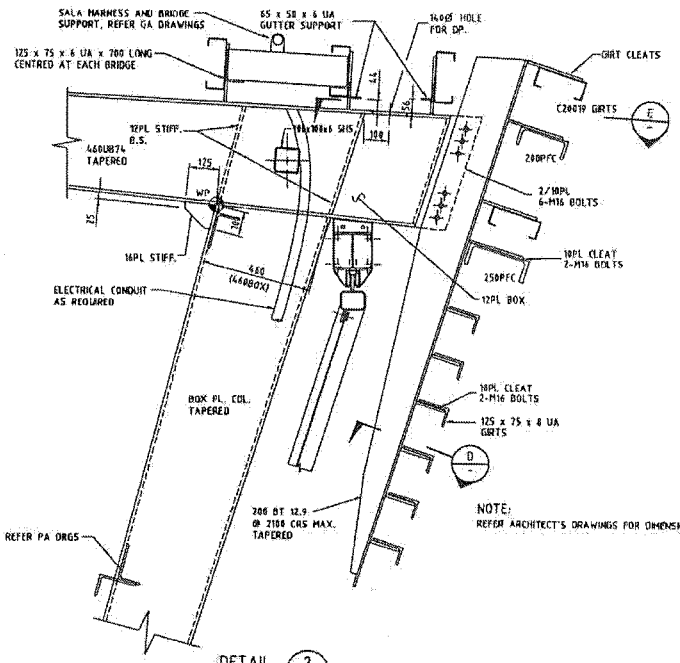

DETAIL 2 1:10

FOR INFORMATION ONLY

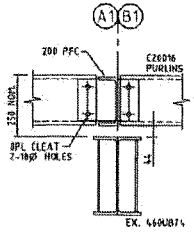

SECTION A 1:10

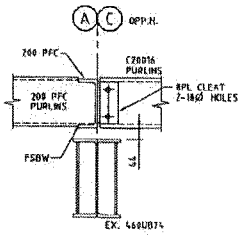

SECTION B 1:10

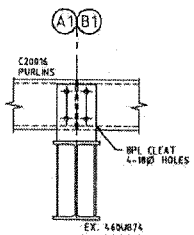

SECTION C 1:10

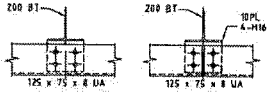

(GIRT CLEATS)

SECTION D 1:10

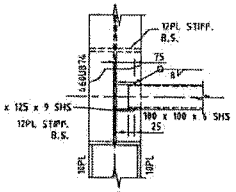

DETAIL 5 1:10

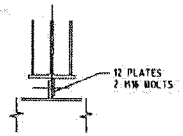

SECTION J 1:10

NOTE: ALL BOLT FIXINGS TO STEELWORK WHICH ARE VISIBLE ARE TO BE STAINLESS STEEL DOUBLE SIDED ACORN-HEADED STUD TYPE.

100 0 100 200 300 400 500mm
1 : 10 FULL SIZE A1

RPECQ No. 22

© COPYRIGHT THIS DRAWING AND DESIGN REMAINS THE PROPERTY OF MAUNSELL AUSTRALIA PTY LTD AND MAY NOT BE COPIED WITHOUT PRIOR WRITTEN APPROVAL FROM THIS COMPANY

No.	BY	DATE	DESCRIPTION	APPD
B		12.7.02	ISSUED FOR SECTION 86 APPROVAL	
A		7.7.02	TENDER EARLY WORKS	

Scales

Maunsell Australia Pty Ltd
COX RAYNER

THE SIGNING OF THIS TITLE BLOCK CONFIRMS THE DESIGN AND DRAWING OF THIS PROJECT HAVE BEEN PREPARED AND CHECKED IN ACCORDANCE WITH THE MAUNSELL AUSTRALIA QUALITY ASSURANCE SYSTEM CERTIFIED TO AS/NZS ISO 9001-1994

DESIGNED	CMD	CHECKED	DDL
DRAWN	PJT	CHECKED	DDL
APPROVED		DATE	

Cad ref: J:\BRIS\Jobs\30302062\Cad\REGATTA\RG-S-051.dwg
Last modified: 12 Jul 02 - 13:16

Project Title: BRISBANE FERRY TERMINALS – CONTRACT No. K57/99/2001

Drawing Title: REGATTA FERRY TERMINAL
WAITING AREA - ROOF
DETAILS

Status

Dwg No. RG-S-051 B

BCC.133.0111

97

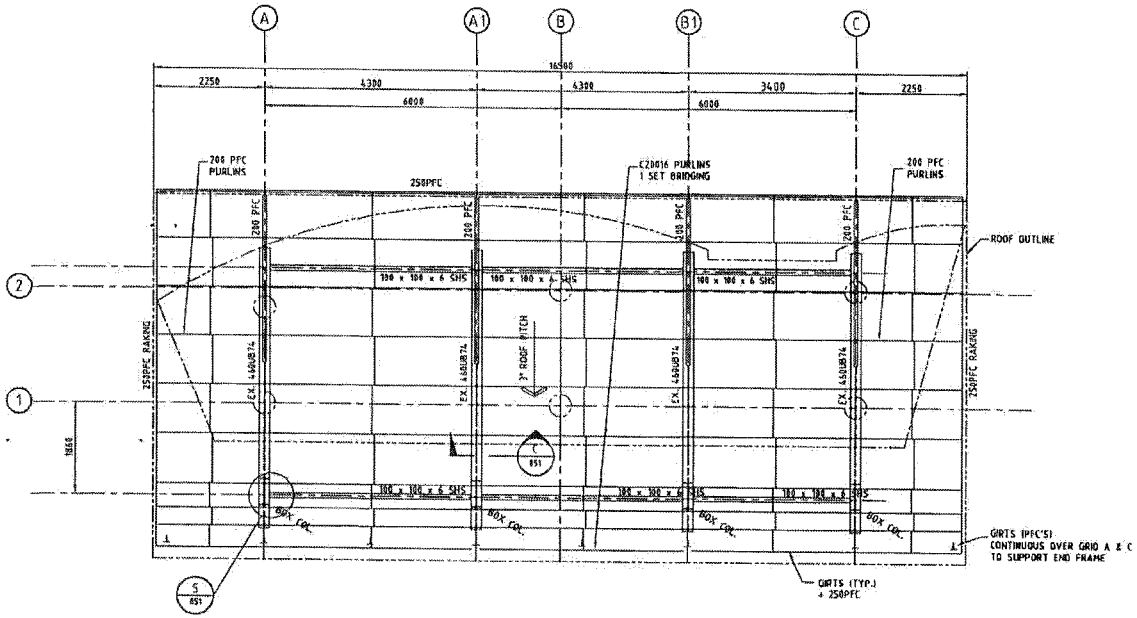

ROOF LAYOUT NOTE: PURLIN BRIDGING MAY BE DISPLACED SLIGHTLY TO SUIT LIGHTING.

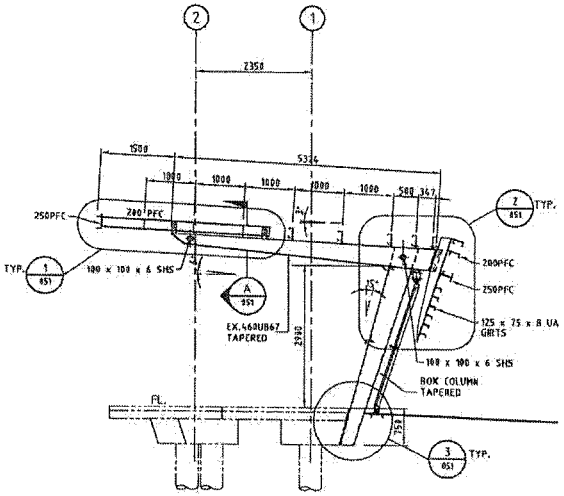

ELEVATION GRID A1 & B1

FOR INFORMATION ONLY

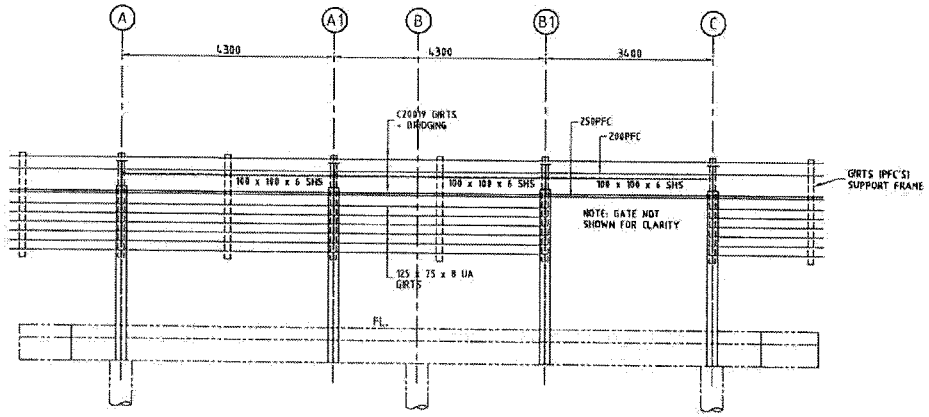

ELEVATION

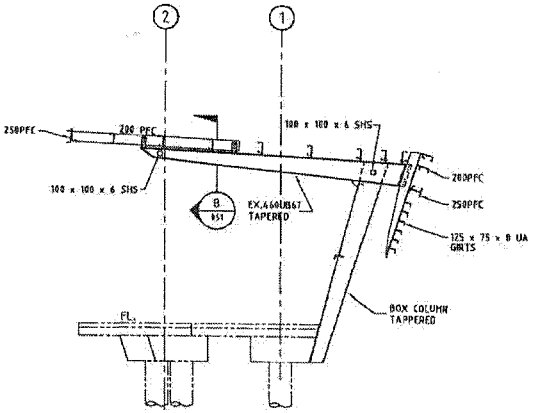

ELEVATION GRID A
ELEVATION GRID C (OPP.H.)

NOTE: ALL BOLT FIXINGS TO STEELWORK WHICH ARE VISIBLE ARE TO BE STAINLESS STEEL DOUBLE SIDED ACORN-HEADED STUD TYPE UNO.
RPECQ No. 22

0.5 0 1 2m
1 : 50 FULL SIZE A1

No.	BY	DATE	DESCRIPTION	APPD
B		11.7.02	ISSUED FOR SECTION 86 APPROVAL	
A		2.1.02	TENDER EARLY WORKS	

Scales

© COPYRIGHT THIS DRAWING AND DESIGN REMAINS THE PROPERTY OF MAUNSELL AUSTRALIA PTY LTD AND MAY NOT BE COPIED WITHOUT PRIOR WRITTEN APPROVAL FROM THIS COMPANY

BY SIGNING OF THIS TITLE BLOCK CONFIRMS THE DESIGN AND DRAFTING OF THIS PROJECT HAVE BEEN PREPARED AND CHECKED IN ACCORDANCE WITH THE MAUNSELL AUSTRALIA QUALITY ASSURANCE SYSTEM CERTIFIED TO AS/NZS ISO 9001-1994

DESIGNED	CMD	CHECKED	DDL
DRAWN	PJT	CHECKED	DDL
APPROVED		DATE	

Cad ref: J:\MMPL\10302002\Cad\REGATTA\RG-S-050.dwg
Last modified: 12 Jul 02 - 13:15

Project Title: BRISBANE FERRY TERMINALS — CONTRACT No. K57/99/2001

Drawing Title: REGATTA FERRY TERMINAL WAITING AREA - ROOF ARRANGEMENT

Status | Drg No. RG-S-050 | Rev B

98

BCC.133.0112

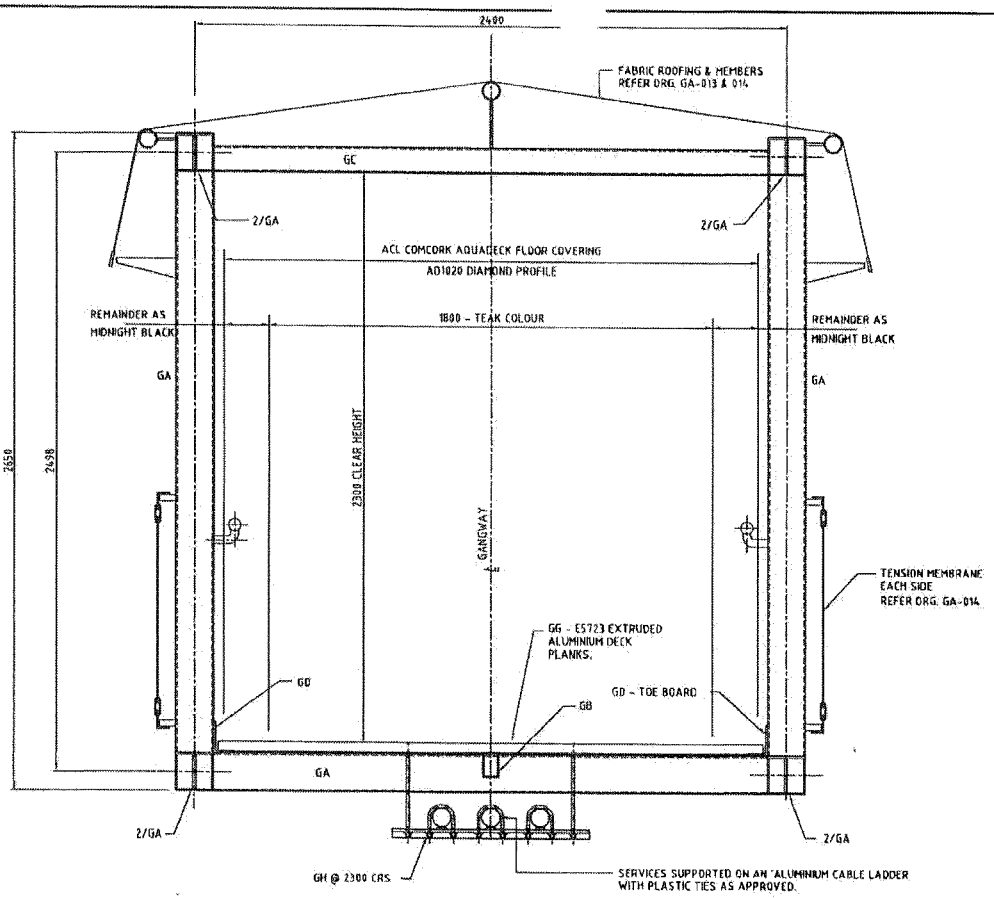

TYPICAL GANGWAY SECTION
SCALE 1 : 10

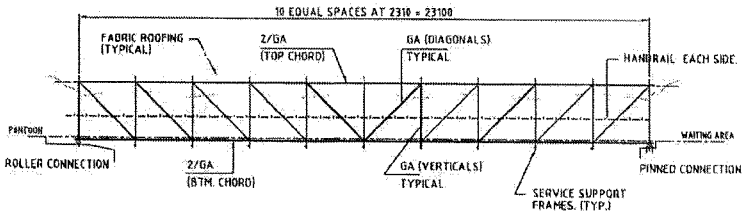

ELEVATION - GANGWAY TRUSS
SCALE 1 : 100

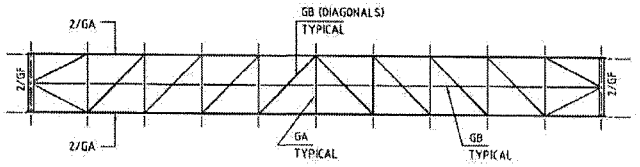

PLAN - GANGWAY TRUSS BTM. FRAME
SCALE 1 : 100

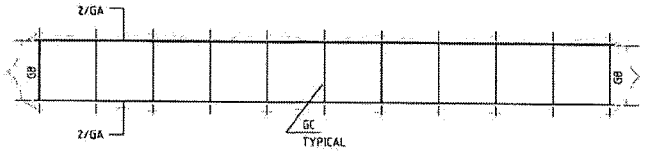

PLAN - GANGWAY TRUSS TOP FRAME
SCALE 1 : 100

MEMBER SCHEDULE - ALUMINIUM			
MARK	DESCRIPTION	SIZE	EXTRUSION No.
GA	TRUSS FRAMING	152.4 x 76.2 x 6.4 RHS	E3267
GB	TRUSS FRAMING	101.6 x 63.5 x 4.0 RHS	E2801
GC	TRUSS FRAMING	101.6 x 63.5 x 6.4 RHS	E8500
GD	TOE BOARD	125x80x8 ANGLE	E20711
GE	(NOT USED)		
GF	TRUSS FRAMING	133.4x88.9 PFC	E5804
GG	FLOOR DECKING PLANKS	-	E5723
GH	SERVICES SUPPORT FRAME	125x50x6 ANGLE	

FOR INFORMATION ONLY

RPECQ No. 22

No	BY	DATE	DESCRIPTION	APPD
A		12.7.02	ISSUED FOR SECTION 86 APPROVAL	

Scales
1:125 FULL SIZE A1

BRISBANE CITY

Abigroup

Maunsell
Maunsell Australia Pty Ltd

COX
COX RAYNER

© COPYRIGHT THIS DRAWING AND DESIGN REMAINS THE PROPERTY OF MAUNSELL AUSTRALIA PTY LTD AND MAY NOT BE COPIED WITHOUT PRIOR WRITTEN APPROVAL FROM THIS COMPANY

THE SIGNING OF THIS TITLE BLOCK CONTAINS THE DESIGN AND DRAFTING OF THIS PROJECT HAVE BEEN PREPARED AND CHECKED IN ACCORDANCE WITH THE MAUNSELL AUSTRALIA QUALITY ASSURANCE SYSTEM CERTIFIED TO AS/NZS ISO 9001-1994

DESIGNED	CMD	CHECKED	DDL
DRAWN	PJT	CHECKED	DDL
APPROVED		DATE	

Cad ref: J:\HMPL\18302002\Cad\REGATTA\Rg-S-055.dwg
Last modified: 12 Jul 02 - 13:17

Project Title: BRISBANE FERRY TERMINALS - CONTRACT No. K57/99/2001

Drawing Title: REGATTA FERRY TERMINAL GANGWAY ARRANGEMENT

Status

Drg No. RG-S-055 Rev. A

BCC.133.0113

99

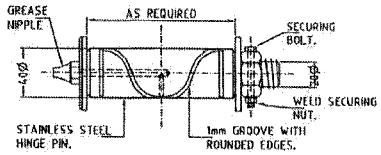

GANGWAY HINGE PIN DETAIL
1:2 SIMILAR DETAIL FOR ROLLERS AT OTHER END OF GANGWAY.

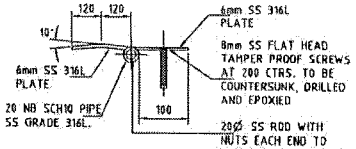

SECTION E 1 : 10

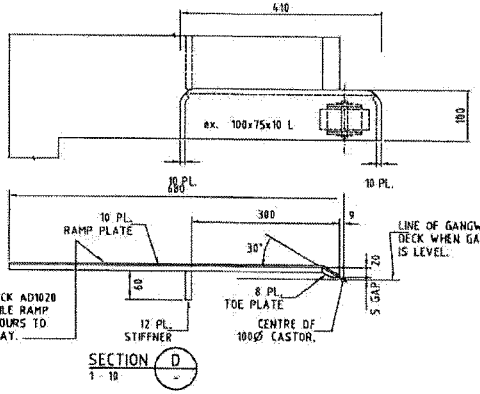

SECTION D 1 : 10

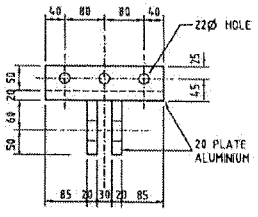

GANGWAY TOP HINGE DETAIL
1:5 NOTE: 4.5 THK. 90Ø NYLON WASHERS (OR EQUAL) TO BE INSTALLED BETWEEN MOVING PLATES

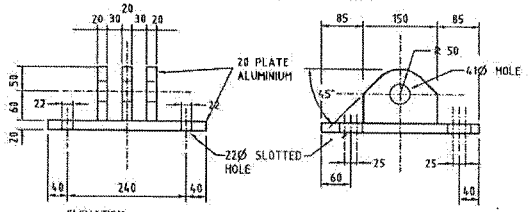

GANGWAY BOTTOM HINGE DETAIL
1:5 TOP & BOTTOM HINGES TO BE MANUFACTURED IN SETS AND CHECKED FOR FIT BEFORE INSTALLATION

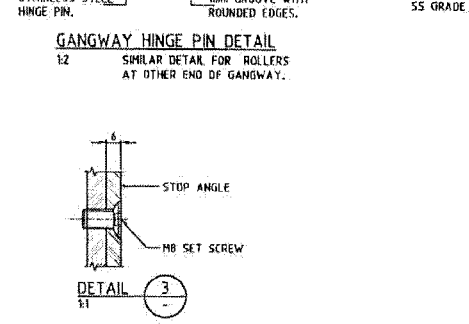

DETAIL 3 1:1

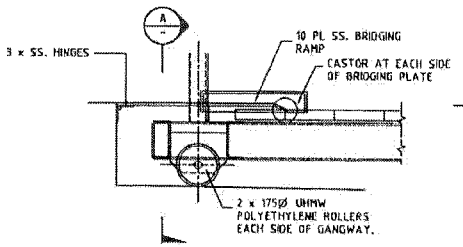

GANGWAY ROLLER CONNECTION DETAIL
SCALE 1 : 10

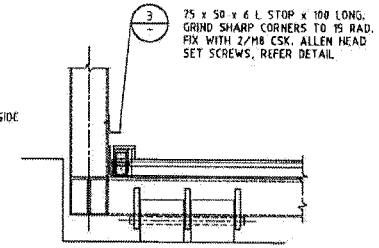

SECTION A 1 : 10

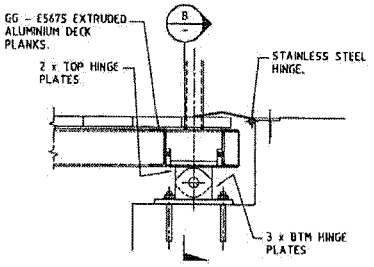

GANGWAY PINNED CONNECTION DETAIL
SCALE 1 : 10

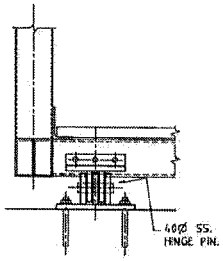

SECTION B 1 : 10

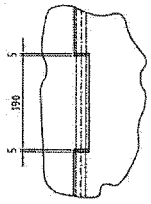

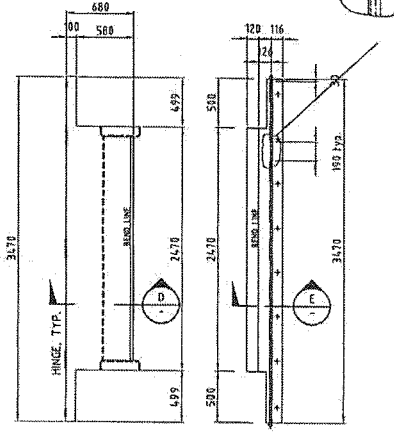

BRIDGING RAMP
SCALE 1:25

BRIDGING FLAP
SCALE 1:25

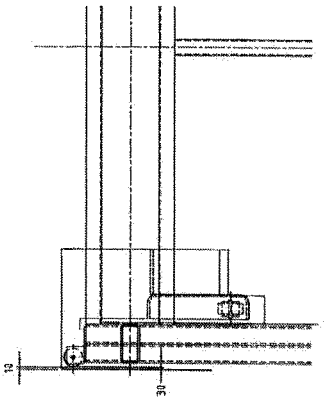

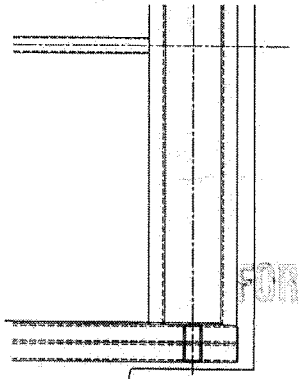

RPECO No. 22

FOR INFORMATION ONLY

No.	BY	DATE	DESCRIPTION	APPD
A		12.7.02	ISSUED FOR SECTION 86 APPROVAL	

Scales
1:10 FULL SIZE A1
1:5 FULL SIZE A1

BRISBANE CITY

Abigroup

Maunsell
Maunsell Australia Pty Ltd
COX
COX RAYNER

© COPYRIGHT THIS DRAWING AND DESIGN REMAINS THE PROPERTY OF MAUNSELL AUSTRALIA PTY LTD AND MAY NOT BE COPIED WITHOUT PRIOR WRITTEN APPROVAL FROM THIS COMPANY

THE SIGNING OF THIS TITLE BLOCK CONFIRMS THE DESIGN AND DRAFTING OF THIS PROJECT HAVE BEEN PREPARED AND CHECKED IN ACCORDANCE WITH THE MAUNSELL AUSTRALIA QUALITY ASSURANCE SYSTEM CERTIFIED TO AS/NZS ISO 9001-1994

DESIGNED	CMD	CHECKED	DDL
DRAWN	PJT	CHECKED	DDL
APPROVED		DATE	

Cad ref: J:\MMPL\19302902\Cad\REGATTA\Rg-S-056.dwg
Last modified: 12 Jul 02 - 15:52

Project Title: BRISBANE FERRY TERMINALS – CONTRACT No. K57/99/2001

Drawing Title: REGATTA FERRY TERMINAL GANGWAY DETAILS SHEET 1

Status

Dwg No. RG-S-056

Rev. A

100

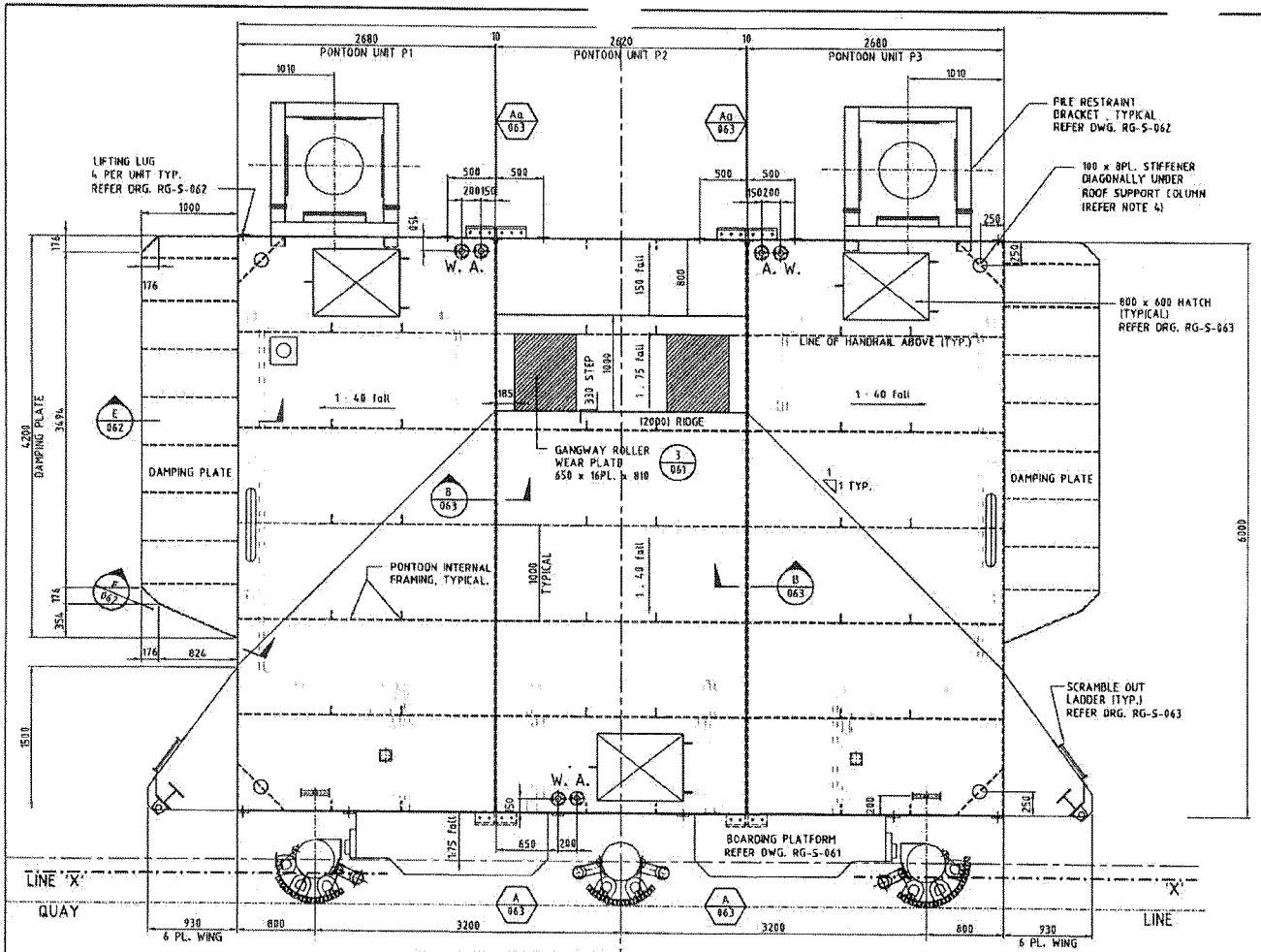

PONTOON LAYOUT PLAN
SCALE 1:25

(2000) DENOTES PONTOON DEPTH

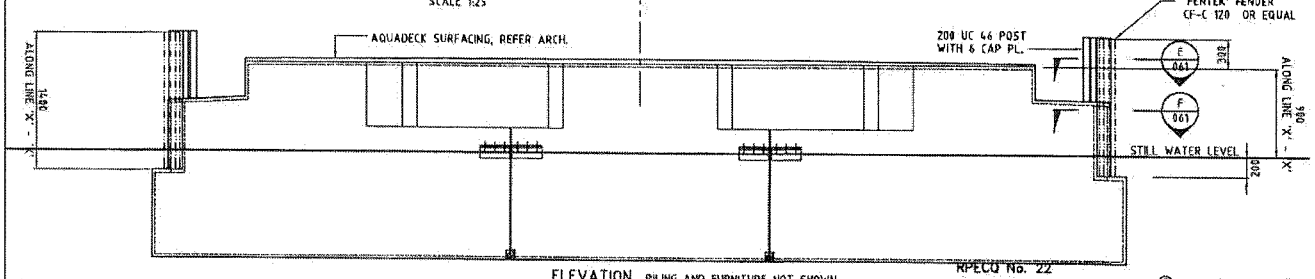

ELEVATION PILING AND FURNITURE NOT SHOWN

RPECQ No. 22

LEGEND

- OR A. DENOTES AIR EXCHANGE STATION
- OR W. DENOTES WATER PUMP OUT STATION
- DENOTES LIFEBOUY
- DENOTES FIRE STATION
- DENOTES INTERCOM POINT
- DENOTES BOLLARD - LOCATION TO BE CONFIRMED BY SUPERINTENENT'S REPRESENTATIVE.
- B 024 DENOTES SPLICE TYPE ON DRAWING No.
- DENOTES HANDRAIL STANCHION, REFER ARCHITECT FOR SETOUT
- DENOTES CONTROL PILLAR REFER ARCHITECT

PONTOONS

1. PONTOON FREEBOARD OF 900mm ALONG LINE X-X ACHIEVED BY BALLASTING THE PONTOONS AS FOLLOWS:
   CONCRETE BALLAST TO BE MASS CONCRETE IN 3 PLATE FORMWORK. TEMPORARY PROPS AS REQUIRED.
   MASS : _____
2. A NOTICE SHOULD BE PAINTED ON TOP OF HATCH COVER 'DANGER. CONFINED SPACE, HAZARDOUS ATMOSPHERE, ENTRY BY PERMIT ONLY.
3. PONTOON FIRE STATION TO BE THE 'MARINE TECHNOLOGIES FIRE STATION' OR EQUAL. CONTACT Ph: 07-55961900, E-MAIL: mtech@onthenet.com.au
4. STUD FOR ROOF SUPPORT COLUMNS TO BE 168 x 7 CHS x 100 HIGH WITH 12 CAP PLATE. HOLES TO SUIT COLUMN BASEPLATE.

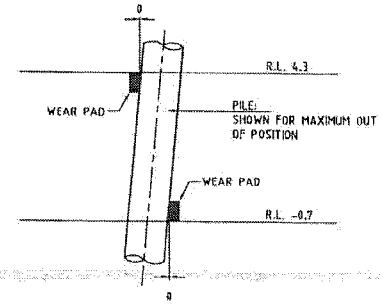

WEAR PAD INSTALLATION DIAGRAM
N.T.S.

FOR INFORMATION ONLY

NOTE

1. FOR GENERAL NOTES REFER DRG. RG-S-002 AND 003

© COPYRIGHT THIS DRAWING AND DESIGN REMAINS THE PROPERTY OF MAUNSELL AUSTRALIA PTY LTD AND MAY NOT BE COPIED WITHOUT PRIOR WRITTEN APPROVAL FROM THIS COMPANY

No.	BY	DATE	DESCRIPTION	APPD
B		12.7.02	ISSUED FOR SECTION 86 APPROVAL	
A		5.7.02	TENDER EARLY WORKS	

Scales: 250 0 500 1000mm — 1 : 25 FULL SIZE A1

BRISBANE CITY

Abigroup

Maunsell
Maunsell Australia Pty Ltd
COX
COX RAYNER

THE SIGNING OF THIS TITLE BLOCK CONTAINS THE DESIGN AND DRAFTING OF THIS PROJECT HAVE BEEN PREPARED AND CHECKED IN ACCORDANCE WITH THE MAUNSELL AUSTRALIA QUALITY ASSURANCE SYSTEM CERTIFIED TO AS/NZS ISO 9001-1994

DESIGNED	CMD	CHECKED	DDL
DRAWN	PJT	CHECKED	DDL
APPROVED		DATE	

Cad ref: J:\HMPE\10302002\Cad\REGATTA\Rg-S-060.dwg
Last modified: 12 Jul 02 - 13:18

Project Title: BRISBANE FERRY TERMINALS – CONTRACT No. K57/99/2001

Drawing Title: REGATTA FERRY TERMINAL PONTOON ARRANGEMENT

Status

Dwg No. RG-S-060 Rev B

101

BCC.133.0115

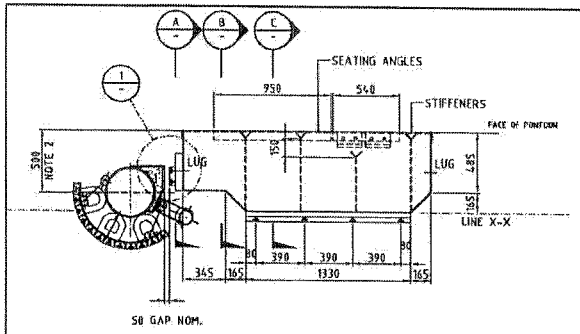

REMOVABLE BOARDING PLATFORM DETAILS

1:20

FABRICATE FROM S PLATE, U.N.O.

SEAL SIDES AND BOTTOM OF PLATFORM TO PONTOON WITH SILICONE SEALANT TO BOTTOM AND SIDES.

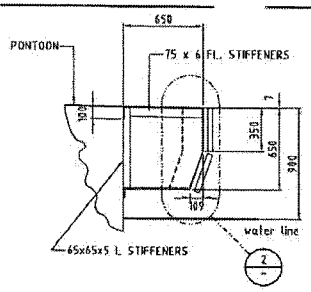

SECTION C
SCALE 1:20

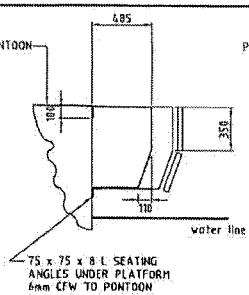

SECTION B
SCALE 1:20

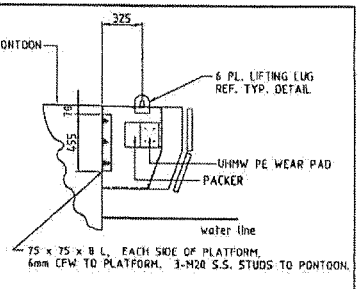

SECTION A
SCALE 1:20

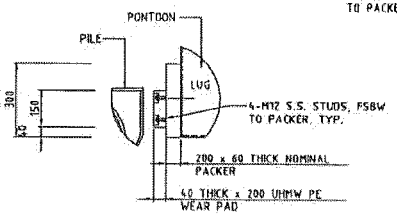

DETAIL 1
1 : 10

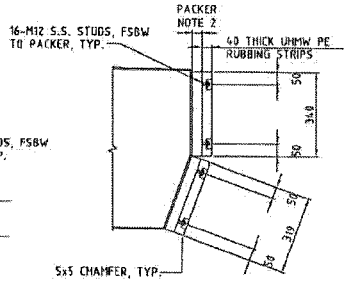

DETAIL 2
1 : 10

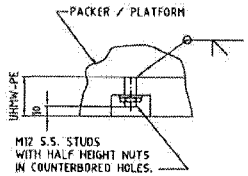

M12 STUD DETAIL
N.T.S.

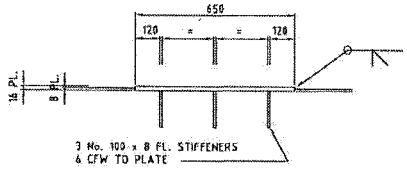

DETAIL 3
1 : 10
060

GANGWAY ROLLER WEAR PLATE

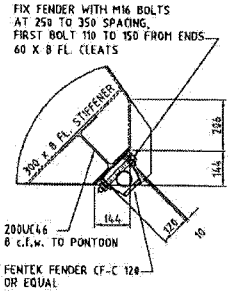

SECTION E
1 : 10
060

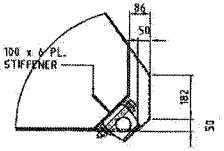

SIMILAR SECTION G

SECTION F
1 : 10
060

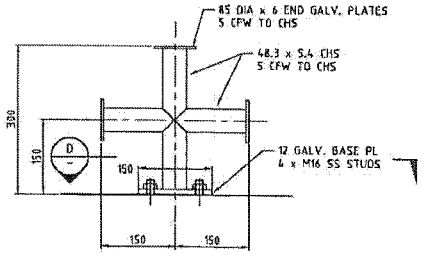

BOLLARD DETAIL
SCALE 1:5

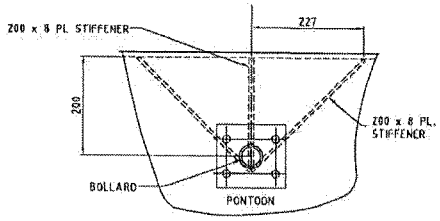

SECTION D
SCALE 1:5

FOR INFORMATION ONLY

NOTES:

1. REFER DRG. RG-S-002 and RG-S-003 FOR GENERAL NOTES
2. PACKER THICKNESS TO INCREASE FROM ZERO TO A MAXIMUM 75mm (PRO RATA BASIS) AS THE 500mm DIMENSION INCREASES WITH PILE LOCATION TOLERANCE

RPECQ No. 22

No.	BY	DATE	DESCRIPTION	APPD
B		12.7.02	ISSUED FOR SECTION 96 APPROVAL	
A		5.7.02	TENDER EARLY WORKS	

Scales
0.2 0 0.2 0.4 0.6 0.8 1.0m
1:20 FULL SIZE A3
0.1 0 0.1 0.2 0.3 0.4 0.5 m
1:10 FULL SIZE A1
0.05 0 0.10 0.20m
1:5 FULL SIZE A1

BRISBANE CITY

Abigroup

Maunsell
Maunsell Australia Pty Ltd
COX
COX RAYNER

© COPYRIGHT THIS DRAWING AND DESIGN REMAINS THE PROPERTY OF MAUNSELL AUSTRALIA PTY LTD AND MAY NOT BE COPIED WITHOUT PRIOR WRITTEN APPROVAL FROM THIS COMPANY

THE SIGNING OF THIS TITLE BLOCK CONFIRMS THE DESIGN AND DRAFTING OF THIS PROJECT HAVE BEEN PREPARED AND CHECKED IN ACCORDANCE WITH THE MAUNSELL AUSTRALIA QUALITY ASSURANCE SYSTEM CERTIFIED TO AS/NZS ISO 9001:1994

DESIGNED	CMD	CHECKED	DDL
DRAWN	PJT	CHECKED	DDL
APPROVED		DATE	

Cad ref: J:\MMPL\13030002\Cad\REGATTA\Rg-S-061.dwg
Last modified: 12 Jul 02 - 13:19

Project Title: BRISBANE FERRY TERMINALS – CONTRACT No. K57/99/2001

Drawing Title: REGATTA FERRY TERMINAL PONTOON DETAILS SHEET 1

Status | Dwg No. RG-S-061 | Rev B

102

BCC.133.0116

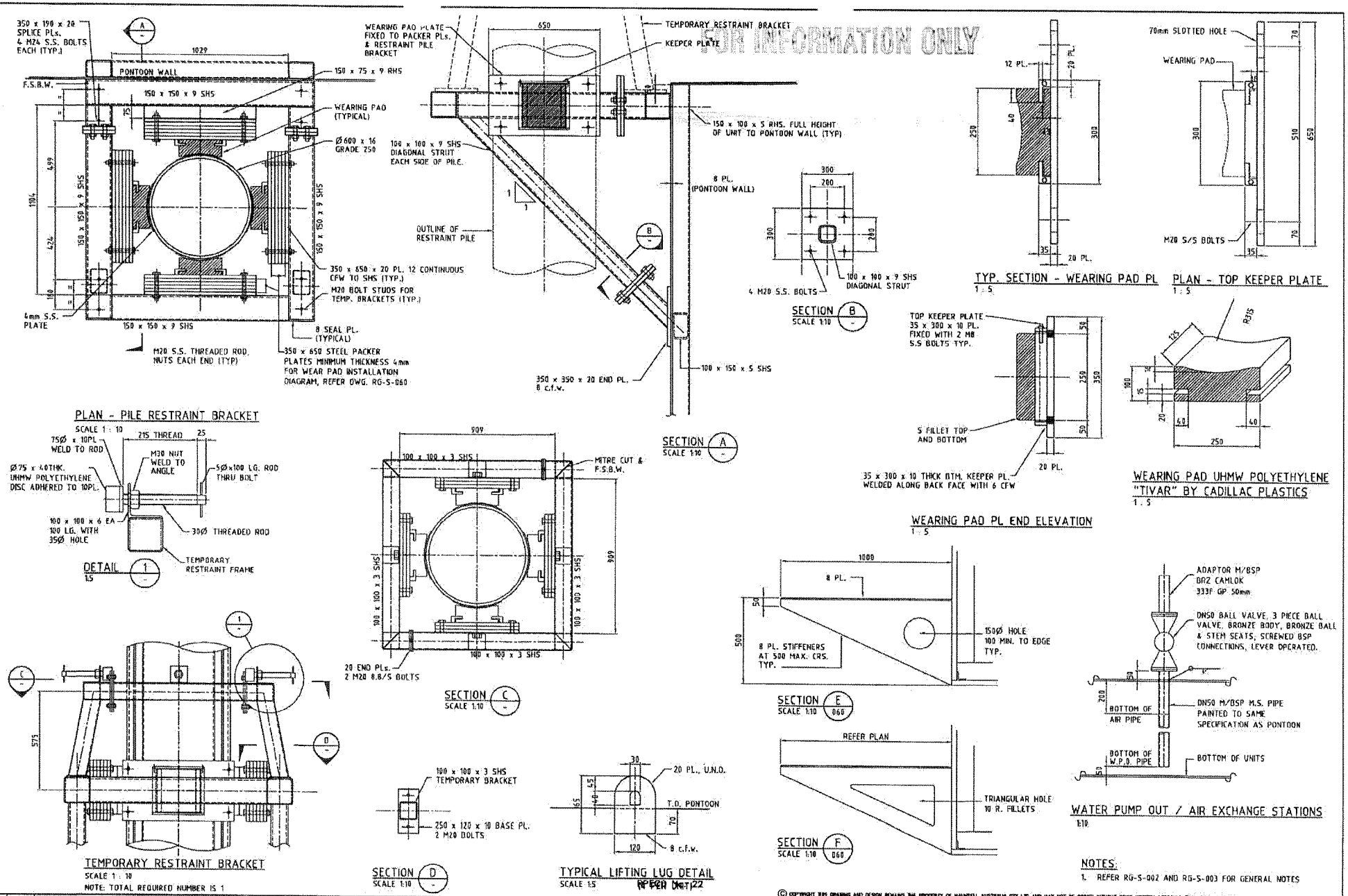

© COPYRIGHT THIS DRAWING AND DESIGN REMAINS THE PROPERTY OF MAUNSELL AUSTRALIA PTY LTD AND MAY NOT BE COPIED WITHOUT PRIOR WRITTEN APPROVAL FROM THIS COMPANY

No.	BY	DATE	DESCRIPTION	APPD
B		12.1.02	ISSUED FOR SECTION 96 APPROVAL	
A		5.7.01	TENDER EARLY WORKS	

Scales

BRISBANE CITY

Abigroup

Maunsell Australia Pty Ltd

COX RAYNER

THE SIGNING OF THIS TITLE BLOCK CONFIRMS THE DESIGN AND DRAFTING OF THIS PROJECT HAVE BEEN PREPARED AND CHECKED IN ACCORDANCE WITH THE MAUNSELL AUSTRALIA QUALITY ASSURANCE SYSTEM CERTIFIED TO AS/NZS ISO 9001:1994

DESIGNED	CMD	CHECKED	DDL
DRAWN	PJT	CHECKED	DDL
APPROVED		DATE	

Cad ref: J:\MMPL\130300021\Cad\REGATTA\Rg-S-062.dwg
Last modified: 12 Jul 02 - 13:28

Project Title: BRISBANE FERRY TERMINALS – CONTRACT No. K57/99/2001

Drawing Title: REGATTA FERRY TERMINAL PONTOON DETAILS SHEET 2

Status

Drg No. RG-S-062

Rev B

103

BCC.133.0117

BCC.133.0118

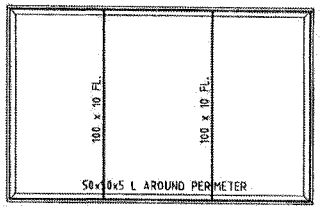

DETAILS FOR PONTOON UNIT END FRAMES

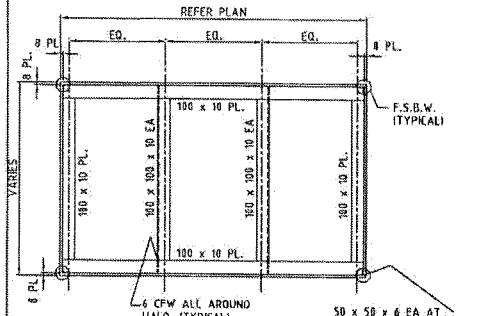

TYPICAL FRAME SECTIONS
SCALE 1:20

NOTE: TOPS OF UNITS SLOPE TO SUIT PONTOON FLOOR FALLS / STEPS

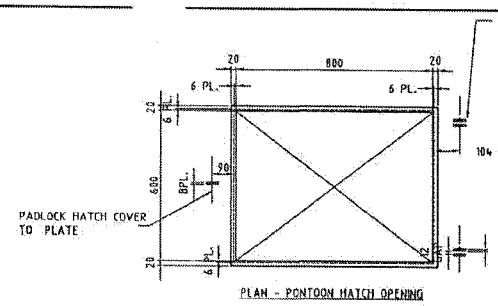

PLAN - PONTOON HATCH OPENING

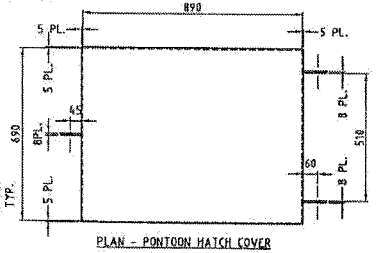

PLAN - PONTOON HATCH COVER

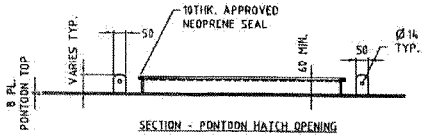

SECTION - PONTOON HATCH OPENING



SECTION - PONTOON HATCH COVER

HATCH OPENING & COVER DETAILS
SCALE 1 : 10 S.C.F.W., TYPICAL, U.N.O.

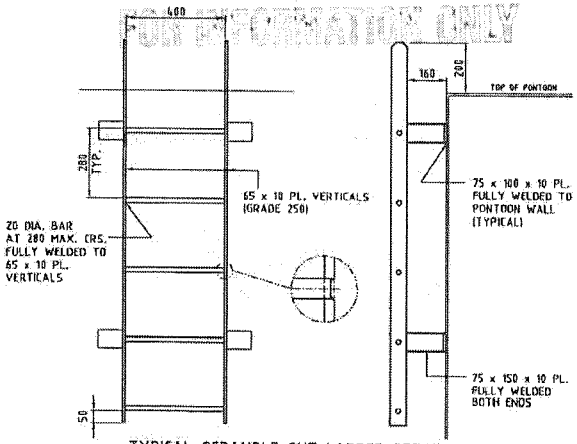

TYPICAL SCRAMBLE OUT LADDER DETAILS
SCALE 1:10

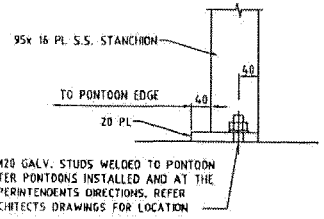

HANDRAIL BASE FIXING
1 : 5

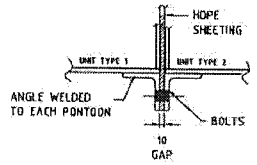

SECTION A
SCALE 1:5

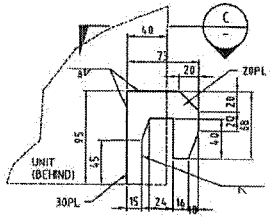

OVER CATCH

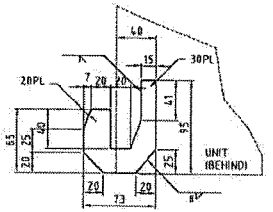

UNDER CATCH

TYPICAL LOWER CATCH DETAIL SCALE 1:2.5

EACH CATCH COMPONENT TO ALIGN WITH 4mm NOMINAL SEPERATION BETWEEN CLASPS AREA

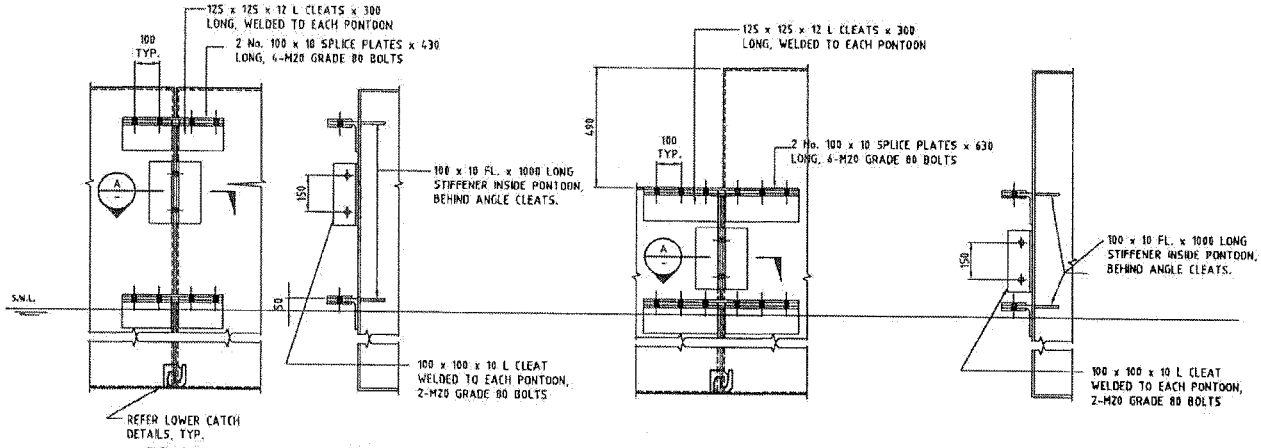

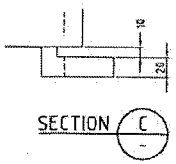

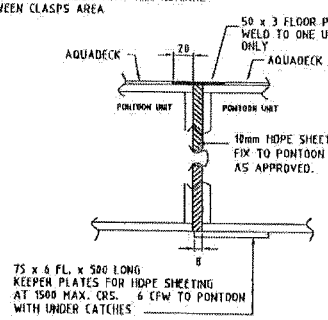

NOTES
1. FOR GENERAL NOTES, REFER TO DWGS RG-S-002 AND RG-S-003

SECTION B

RPECQ No. 22

No.	BY	DATE	DESCRIPTION	APPD
B		13.7.02	ISSUED FOR SECTION 86 APPROVAL	
A		5.7.02	TENDER EARLY WORKS	

Scales
1 : 20 FULL SIZE A1
1 : 5 FULL SIZE A1

© COPYRIGHT THIS DRAWING AND DESIGN REMAINS THE PROPERTY OF MAUNSELL AUSTRALIA PTY LTD AND MAY NOT BE COPIED WITHOUT PRIOR WRITTEN APPROVAL FROM THIS COMPANY

THE SIGNING OF THIS TITLE BLOCK CONFIRMS THE DESIGN AND DRAFTING OF THIS PROJECT HAVE BEEN PREPARED AND CHECKED IN ACCORDANCE WITH THE MAUNSELL AUSTRALIA QUALITY ASSURANCE SYSTEM CERTIFIED TO AS/NZS ISO 9001:1994

DESIGNED	CMD	CHECKED	DDL
DRAWN	PJT	CHECKED	DDL
APPROVED		DATE	

Cad ref: JAMPLT
Last modified: 1
Cad\REGATTA\Rg-S-063.dwg
B

Project Title: BRISBANE FERRY TERMINALS – CONTRACT No. K57/99/2001

Drawing Title: REGATTA FERRY TERMINAL PONTOON DETAILS SHEET 3

Status

Dwg No. RG-S-063

Rev B

104

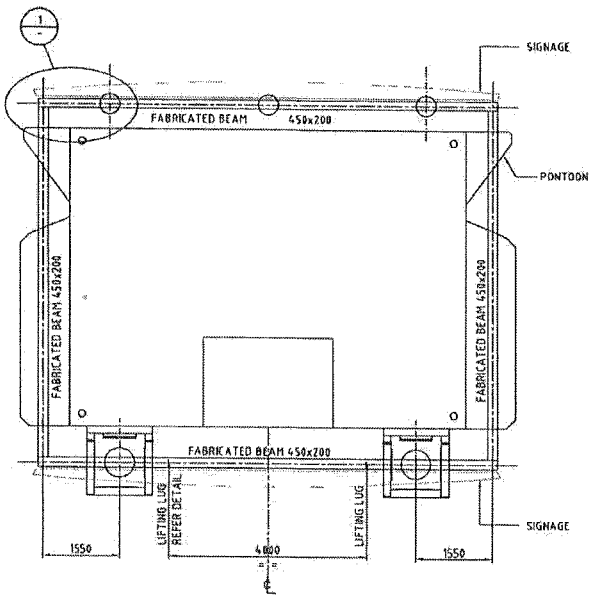

PONTOON FRAME PLAN
1:50

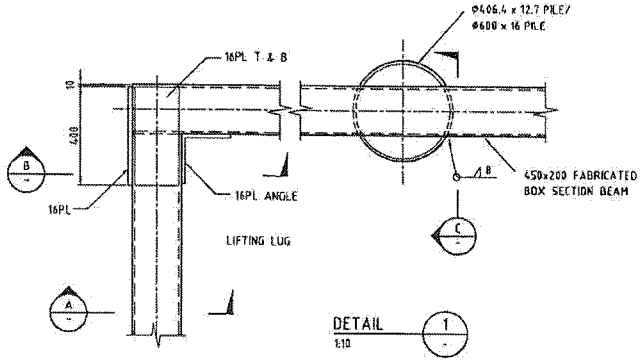

DETAIL 1
1:10

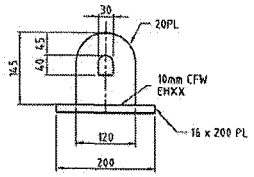

TYPICAL LIFTING LUG DETAIL
SCALE 1:5

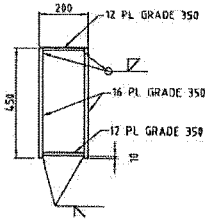

SECTION A
1:10

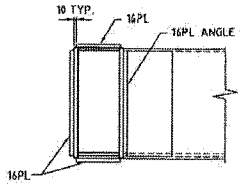

SECTION B
1:10

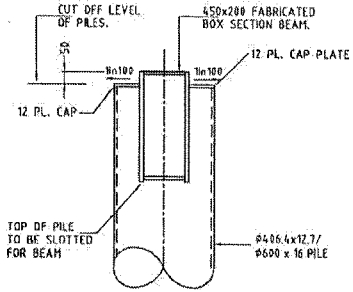

SECTION C
1:10

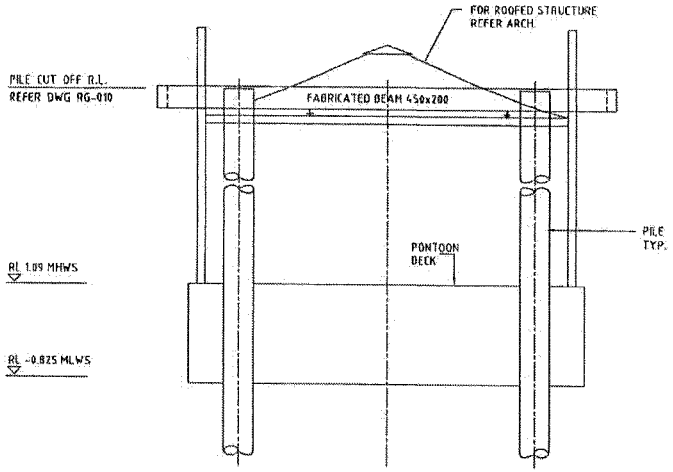

FRONT ELEVATION
1:50

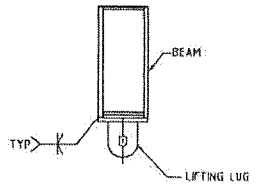

SECTION AT LIFTING LUG

FOR INFORMATION ONLY

NOTES

1. FOR GENERAL NOTES, REFER DWGS. RG-S-002 AND RG-S-003
2. ALL WELDS TO BE FULL STRENGTH BUTT WELDS, TYP. U.N.O.
3. SIGNAGE FIXING BRACKETS (3 No. PER SIGN) BY SIGNAGE CONTRACTOR. DRILL AND TAP FABRICATED BEAM FOR 4-M12 PER BRACKET. ENSURE FABRICATED BEAM IS SEALED FROM MOISTURE.

RPECQ No. 22

No.	BY	DATE	DESCRIPTION	APPD
B		17.7.02	ISSUED FOR SECTION 86 APPROVAL	
A		2.7.02	TENDER EARLY WORKS	

Scales: 500 0 1000 2000mm; 1 : 50 FULL SIZE A1

BRISBANE CITY

Abigroup

Maunsell
Maunsell Australia Pty Ltd
ACN 050 290 635

COX
COX RAYNER

© COPYRIGHT THIS DRAWING AND DESIGN REMAINS THE PROPERTY OF MAUNSELL AUSTRALIA PTY LTD AND MAY NOT BE COPIED WITHOUT PRIOR WRITTEN APPROVAL FROM THIS COMPANY

THE SIGNING OF THIS TITLE BLOCK CONFIRMS THE DESIGN AND DRAWING OF THIS PROJECT WERE BEEN PREPARED AND CHECKED IN ACCORDANCE WITH THE MAUNSELL AUSTRALIA QUALITY ASSURANCE SYSTEM CERTIFIED TO AS/NZS ISO 9001:1994

DESIGNED	CMD	CHECKED	DDL
DRAWN	PJT	CHECKED	DDL
APPROVED		DATE	

Cad ref: J:\BRISBANE\130202002\Cad\REGATTA\Rg-S-070.dwg
Last modified: 12 Jul 02 - 13:21

Project Title: BRISBANE FERRY TERMINALS – CONTRACT No. K57/99/2001

Drawing Title: REGATTA FERRY TERMINAL
PILING RING BEAM
ARRANGEMENT AND DETAILS

Status:

Drg No. RG-S-070

Rev B

105

BCC.133.0119

"ASH-06"

WEST END FERRY TERMINAL REPLACEMENT

Design Basis Report

Prepared for:

BRISBANE CITY COUNCIL
Level 6, 266 George Street,
Brisbane QLD 4000

Prepared by:

Kellogg Brown & Root Pty Ltd
ABN 91 007 660 317
Level 11, 199 Grey Street, South Bank QLD 4101

[redacted]

7 September 2009

BEJ810-W-REP-001 Rev. 0

© Kellogg Brown & Root Pty Ltd, 2009

Limitations Statement

The sole purpose of this report and the associated services performed by Kellogg Brown & Root Pty Ltd (KBR) is to define the basis of design in accordance with the scope of services set out in the contract between KBR and Brisbane City Council ('the Client'). That scope of services was defined by the requests of the Client, by the time and budgetary constraints imposed by the Client, and by the availability of access to the site.

KBR derived the data in this report primarily from relevant Australian and international codes, visual inspections and information provided by the Client. The passage of time, manifestation of latent conditions or impacts of future events may require further exploration at the site and subsequent data analysis, and re-evaluation of the findings, observations and conclusions expressed in this report.

In preparing this report, KBR has relied upon and presumed accurate certain information (or absence thereof) relative to the site provided by government officials and authorities, the Client and others identified herein. Except as otherwise stated in the report, KBR has not attempted to verify the accuracy or completeness of any such information.

No warranty or guarantee, whether express or implied, is made with respect to the data reported or to the findings, observations and conclusions expressed in this report. Further, such data, findings, observations and conclusions are based solely upon site conditions and information provided by the Client in existence at the time of the investigation.

This report has been prepared on behalf of and for the exclusive use of the Client, and is subject to and issued in connection with the provisions of the agreement between KBR and the Client. KBR accepts no liability or responsibility whatsoever for or in respect of any use of or reliance upon this report by any third party.

Revision History

Revision	Date	Comment	Signatures		
			Originated by	Checked by	Approved by
A	10/03/09	Issued for review and comment	[redacted]		
0	07/09/2009	Final issue to client for use			

CONTENTS

Section		Page
1	**INTRODUCTION**	
1.1	Commission	1-1
1.2	Purpose	1-1
1.3	Limits of the project	1-1
1.4	Objectives	1-2
1.5	Reference documents	1-2
2	**STRUCTURAL DESIGN CRITERIA**	
2.1	Intended use	2-1
2.2	General	2-1
2.3	Survey and datum	2-2
2.4	Astronomical tide	2-2
2.5	Greenhouse gas induced sea level rise allowance	2-3
2.6	Storm tide elevation (to be confirmed)	2-3
2.7	Vessel berthing and mooring	2-3
2.8	Scour and accretion	2-3
2.9	Materials and durability	2-4
2.10	Waves	2-5
3	**LOADS**	
3.1	Dead loads	3-1
3.2	Live loads	3-1
3.3	Load factors and combinations	3-1
3.4	Seismic	3-2
3.5	Construction loads	3-2
3.6	Wind loads	3-2
3.7	Berthing and accidental berthing load	3-2
3.8	Marine growth	3-2
3.9	Flood levels and loads	3-3
4	**GENERAL DESIGN DETAILS**	
4.1	Piling design (to be confirmed)	4-1
4.2	Pontoon design	4-1
4.3	Gangway design	4-1
4.4	walkway design	4-1
4.5	Land based waiting area	4-1
4.6	Emergency ladders	4-2
4.7	Services to be included	4-2
4.8	Services that will not be included	4-2
5	**SAFETY**	
5.1	Safety approach	5-1
5.2	Residual risks	5-1

Section		Page
APPENDICES		
A	Brisbane City Council Design Brief	
B	Load Combinations	
C	Geotechnical Report	

BCC.133.0583

1 Introduction

1.1 COMMISSION

Kellogg Brown & Root Pty Ltd (KBR) has been commissioned by the Brisbane City Council (BCC) to undertake the design of a passenger terminal, pontoon and gangway system and associated works for the upgraded passenger ferry terminal facility at Hoogley Street, West End.

1.2 PURPOSE

Generally, the purpose of the West End Ferry Terminal Upgrade is to:

- account for anticipated passenger demand
- increase the ease of use of the facility by the operators
- improve disabled access
- provide mooring opportunities for CityCat vessels.

Specifically, the purpose of the project is detailed in the BCC Design Brief in Appendix A.

1.3 LIMITS OF THE PROJECT

1.3.1 Scope limits

KBR shall:

> 'prepare detailed final construction drawings, specifications and engineering certification suitable to obtain approval of Prescribed Tidal Works and Marine Plant Permits or any other approvals required by the State or Local Government authorities, including the Integrated Planning Act, Coastal Protection and Management Act, and the Integrated Development Assessment Scheme.'

1.3.2 Physical limits

The physical scope of the project includes the ferry terminal and limited works to the end of Hoogley Street adjacent to the ferry terminal. The battery limits for land works extend into the road reserve up to the proposed new kerb, between the boundary of Lot 143RP10977 and the existing bus set down at the end of Hoogley Street. Battery limits over water are defined by water allocation area plan.

1.4 OBJECTIVES

The objective of this report is to outline to the client the proposed design standards and technical documents that will be utilised in the detailed design of the West End Ferry Terminal and associated work.

1.5 REFERENCE DOCUMENTS

The current version of the following Standards, Manuals, Acts and Guidelines are to be used, where appropriate.

Australian/New Zealand Standards

Standards Australia (2002), 'AS 1170.0 Structural design actions – General principles'

Standards Australia (2002), 'AS 1170.2 Structural design actions – Wind actions'

Standards Australia (1993), 'AS 1170.4 Minimum design loads on structures – Earthquake loads'

Standards Australia (2001), 'As 1428.1 Design for access and mobility – General requirements for access – New building work'

Standards Australia (1992), 'AS 1428.2 Design for access and mobility – Enhanced and additional requirements – Buildings and facilities'

Standards Australia (1997), 'AS 1664.1 Aluminium structures - Limit state design'

Standards Australia (1997), 'AS 1720.1 Timber structures - Design methods'

Standards Australia (2003), 'AS 2832.2 Cathodic protection of metals – Compact buried structures'

Standards Australia (2001), 'AS 3600 Concrete structures'

Standards Australia (2001), 'AS 3962 Guidelines for design of marinas'

Standards Australia (1998), 'AS 4100 Steel structures'

Standards Australia (2005), 'AS 4997 Guidelines for the design of maritime structures'

Standards Australia (2004), 'AS 5100 Bridge design'

Australian Building Codes Boards (2007), 'Building Code of Australia (BCA)'

Queensland Urban Drainage Manual

Disability Standards for Accessible Public Transport 2002.

Overseas Standards

British Standards (1984 & 2000), 'BS 6349-1 Maritime structures, Part 1: Code of practice for general criteria'

US Army Corps of Engineers (2001 & 2005), 'Coastal Engineering Manual (CEM)'.

References

Environmental Protection Agency, Queensland (2006), 'Building and engineering standards for tidal works', Operations policy, Coastal development.

Harper, B. (2007), 'Houghton Highway Duplication: Review of Design Storm Tide Elevations, 'SEA P/L', for KBR.

Maritime Safety Queensland (MSQ) (2006), 'The Official Tide Tables & Boating Safety Guide', Qld Dept of Transport.

Reinecker, M.M. & Fenton, J.D. (1981), 'A Fourier approximation method for steady water waves', *Jl. Fluid Mech.*, Vol 104, pp. 119-137

Whitehouse, R. (1998), 'Scour at marine structures', HR Wallingford.

Whitehouse, R.; Soulsby, R.; Roberts, W. & Mitchener, H. (2000), 'Dynamics of estuarine muds', HR Wallingford

Soulsby, R. (1997), 'Dynamics of marine sands', HR Wallingford.

Brisbane City Council (BCC) (2000), 'Crime prevention through environmental design (CPTED) planning scheme policy', Community Support, Safety Initiatives.

Acts

Environmental Protection Act 1994

Workplace Health & Safety Act 1995

Commonwealth Disability Discrimination Act 1992

Queensland Anti-Discrimination Act 1991

Other Acts as applicable to the project.

The specific design issues for this project and the associated design criteria/parameters developed in accordance with these referenced documents are detailed in Section 2.

2 Structural design criteria

The following are the design criteria that KBR recommends for design, based on the information given in the BCC Design Brief and relevant Australian and International Standards.

2.1 INTENDED USE

The intended uses of the works are to:

- provide berthing and mooring for CityCat vessels
- provide access to and from the vessels
- provide sheltered areas for embarking/disembarking passengers.

2.2 GENERAL

The design criteria are set out in the Design Brief documents prepared by BCC. These criteria are listed in Appendix A.

The basic design code to be met in the design of the new works is AS 4997-2005 'Guidelines for the design of maritime structures', as amended by or amplified in the Design Brief. General design criteria principles are listed in Table 2.1.

Table 2.1 Design criteria

Criterion	Value	Source
All Structures		
Design Life	50 years	BCC Design Brief/KBR proposal
Live Load – Strength	5 kPa or 4.5 kN concentrated load	BCC Design Brief/ AS 3962-2001
Live Load – Stability	3 kPa	BCC Design Brief/ AS 3962-2001
Ultimate Wind Actions – 3 s gust	$V_{des.\theta}$ = 51.3 m/s	BCC Design Brief/ AS 1170.2-2002
Ultimate Wind Actions – 30 s	V(30 s) = 45.7 m/s	CEM Figure II-2-1
Ultimate Wind Actions – 1 hr	V(1 hr) = 34.2 m/s	CEM Figure II-2-1
Ultimate Wind Waves	Waves generated from ultimate wind	KBR recommendation
Vessel Wake	Min H = 0.6 m, Period = 6 s	BCC Design Brief with KBR Modification
Flood Level	Q100 Flood Level = +4.95 mAHD Defined Flood Event = +5.78 mAHD	BCC Flood data

Criterion	Value	Source
Flood Currents	Q100 Flood Current = 2.02 m/s	See section 3.9
Debris Loading	2 t log stopping in 300 mm distance + debris mat as per AS 5100.	AS 5100-2004 Bridge Code
Sea Level Rise	0.2 m increase in 2008 sea levels over 50 year design life. This will apply to all tide and flood levels.	AS 4997-2005
Pontoon		
Normal Berthing	36 t CityCat, 0.5 m/s berthing velocity, 15° to quay line	BCC Design Brief
Accidental Berthing	36 t CityCat, 3.0 m/s berthing velocity, 45° to quay line	BCC Design Brief
Freeboard – Neutral (maximum)	900 mm unloaded	BCC Design Brief
Freeboard - Minimum	50 mm with opposite chine still submerged	AS 3962-2001 Guidelines for design of Marinas
Acceleration under accidental berthing	Max lateral acceleration at commuter centre of gravity Ah < 2.5 m/s²	BCC Design Brief
Flood Levels	Pontoon to stay on piles at Defined Flood Level with 1 m of pile exposed (not including pile caps or pontoon freeboard)	BCC Design Brief
Unrestricted Access		
Gangways	4 kPa uniformly distributed load (over clear width and length)	AS 3962-2001
	4.5 kN concentrated load	
Fixed Structure	5 kPa uniformly distributed load over the deck plan	AS 3962-2001
	4.5 kN concentrated load	
Floating Structure	3.0 kPa flotation load for both walkways and fingers	AS 3962-2001
	2.0 kPa stability load	

2.3 SURVEY AND DATUM

The vertical datum is Australian Height Datum (AHD). The relationship between AHD, the tide and Chart Datum (CD) is shown in Table 2.3.

The horizontal datum is GDA.

2.4 ASTRONOMICAL TIDE

Table 2.2 Astronomical Tidal Plane (based on Brisbane – Port Office (Edward Street Ferry), MSQ, 2000)

Level	Metres Australian Height Datum (AHD)	Metres Chart Datum (CD)
Highest Astronomical Tide (HAT)	+1.55	+2.79
Mean High Water Springs (MHWS)	+0.98	+2.22
Mean High Water Neaps (MHWN)	+0.57	+1.81
Mean Sea Level (MSL)	+0.07	+1.31

Level	Metres Australian Height Datum (AHD)	Metres Chart Datum (CD)
Australian Height Datum (AHD)	0	+1.24
Mean Low Water Neaps (MLWN)	-0.47	+0.77
Mean Low Water Springs (MLWS)	-0.88	+0.36
Lowest Astronomical Tide (LAT)	-1.24	0

Tidal Currents have not been measured. However based on river modelling undertaken by BCC it is understood that they are typically less than 0.7 m/s, therefore, they will not govern the design.

2.5 GREENHOUSE GAS INDUCED SEA LEVEL RISE ALLOWANCE

The 50 year design life sea level rise of 0.2 m was obtained from Table 2.3 from AS 4997:2005. This level will be added to all water levels for strength calculations.

Table 2.3 Greenhouse gas induced sea level rise allowance (from AS4997-2005, Table 4.1)

Design life (years)	Sea level rise (m)
25	0.1
50	0.2
>100	0.4

2.6 STORM TIDE ELEVATION

Storm tides will not be considered as a separate load case. Advice from BCC suggests that the Q100 Flood Level is affected by storm tide and is higher than storm tide only.

2.7 VESSEL BERTHING AND MOORING

2.7.1 Normal berthing

The normal berthing energy shall be calculated assuming a 36 t CityCat vessel travelling at an approach velocity of 0.5 m/s.

2.7.2 Accidental berthing

The accidental berthing energy shall be calculated assuming a 36 t City Cat vessel with a berthing velocity of 3 m/sec with an approach angle of 45 degrees.

2.8 SCOUR AND ACCRETION

2.8.1 Scour

Geotechnical investigations undertaken by City Design - Ground Engineering in May 2009 (see Appendix C) at the site of the proposed new terminal indicate that the bed is primarily made up of silty clay and clay, recent alluvium at the surface graduating to

sand and gravel at depth. It appears the stiff clays and gravel will be resistant to both local and general scour.

KBR recommend a scour allowance of 1.0 m be adopted to represent both local and general scour for the life of the structure. This is a professional judgement made by KBR in the absence of more detailed calculations.

Note that local scour of 1.3 times the pile diameter can be expected in the softer materials (Whitehouse 1998).

2.8.2 Accretion

An allowance of 1.0 m accretion under the pontoon and waiting area will be made for the life of the structure. This value is a professional estimate by KBR; there is no data or modelling to support this value at this stage.

2.9 MATERIALS AND DURABILITY

2.9.1 Concrete

For all concrete members, Exposure Classification C2 (AS 4997-2005 Table 6.3) will be adopted.

Based on AS 4997-2005 and specialist durability advice, the cover for all members with N-grade steel reinforcement shall be 50 mm.

The concrete grade will be 50 MPa. Concrete will contain cement with 30% fly ash and 70% Portland cement in order to lower the permeability of the concrete and to prevent alkali silica reaction.

Calcium Nitrite will be added to the concrete to inhibit corrosion of the reinforcement. $Ca(NO_2)_2$ will add 200 microstrain to the overall shrinkage strains that could otherwise be expected, which will be accounted for in the design. $Ca(NO_2)_2$ is an accelerant and must be used in unison with a retarding agent.

All concrete will have two coats of Silane Siloxane applied.

2.9.2 Reinforcement

Reinforcement will be grade N500 'normal steel'. No special treatment will be specified for the reinforcement. Stainless Steel reinforcement is not proposed.

2.9.3 Stainless steel

Unless nominated otherwise, all stainless steel elements are to be Grade 316 with yield strength of 205 MPa and Young's modulus of 195 GPa.

For welded stainless steel components, 316L grade is to be used.

Nuts shall be duplex 2205 grade (UNS 531803).

Washers shall be 316 (UNS S31600), electropolished or passivated.

2.9.4 Aluminium

Welded aluminium extruded sections will be alloy 6005-T5. The yield strength to be used in design is 117 MPa (Table 3.3(B) AS 1664.1-1997), with a Young's modulus of 68.3 GPa.

2.9.5 Steel

Piles will be Grade 350 steel Circular Hollow Sections with yield stress of 350 MPa and a Young's modulus of 200 GPa. Piles are to be painted.

In and below the splash zone, a corrosion allowance of 0.1 mm per annum will be made, which gives 5 mm corrosion over the 50 year design life. Above the splash zone, an allowance of 0.05 mm per annum will be made for each face exposed. (The splash zone extends from LAT to HAT +1 m). The only items which will not be designed with a corrosion allowance are painted items which are above HAT and are visible e.g. hand rails, sliding gate.

2.9.6 Timber

Timber shall be seasoned hardwood, minimum Grade F17 with an assumed density of 1000 kg/m^3.

2.10 WAVES

2.10.1 Vessel wake

The Design Brief from BCC specifies that the minimum vessel wave height shall be 0.6 m, with periods ranging from 4 to 6 seconds.

KBR experience indicates that 6 seconds is a likely period for waves of this kind.

The adopted vessel wake design wave is therefore H = 0.6 m and t = 6 s.

2.10.2 Wind waves

Maximum fetch to sites along the West End reach is 1.3 km, which is the distance from Hoogley Street travelling upstream to the east.

In order to estimate the design wave heights at the site adopt:

- regional basic design wind three second gust velocities from AS 1170.2-2002, Zone B
- assume a storm duration of 1 hour
- mean wind speeds over the duration of the storm being a conversion of the three second gust from AS 1170.1 - 2002 using the method in the CEM 2001, Fig II-2-1.

Key assumptions are:

- Perfect coincidence between the flood/storm tide peak, the design wave peak and the design wind peak. This assumption is adopted because the floods, storm tide and wind waves are being generated by the same meteorological event – a tropical cyclone.

- The design wave height is H1% from AS 4997-2005, Clause 5.9.2, where H1% is the mean of the highest 1% of the waves.
- The non-depth limited H1% = 1.7 X Hsig (AS 4997-2005 Clause 5.9.2) where Hsig is the significant wave height which is the mean of the highest one third of the waves.
- The non-breaking wave crest elevation shall be estimated using a non-linear potential flow wave theory (e.g. the Fourier Approximation Method (Rienecker & Fenton 1981).

The adopted design waves are to be confirmed.

2.10.3 Wave loading estimation

Combined wave and current fluid motions shall be estimated using a 2D non-linear potential flow wave model e.g. the Fourier Approximation Method (Rienecker and Fenton 1981).

Wave loading on the structure shall be estimated using the Morison formula (CEM 2005), with drag and inertia coefficients from Table 2.4.

Table.2.4 Drag and inertia coefficients

Member cross section type	Drag coefficient 'C_D'	Inertia coefficient 'C_I'	Lateral force coefficient 'C_L'	References
Circular pile – smooth surface	0.70	2.0	Refer §3.2.11 (iv)	AS 4997-2005 Table 5.3 BS 6349, Fig 19, High Reynolds number
Circular pile – rough surface (e.g. with marine growth)	1.07	2.0	Refer §3.2.11 (iv)	AS 4997-2005 Table 5.3 BS 6349, Fig 19, High Reynolds number
Rectangular with sharp corners	2.2	2.5	0.9 for $\theta_w \leq 30^0$ 1.0 for $\theta_w > 30^0$	AS 4997-2005 Table 5.3 BS 6349, Table 7 AS 5100.2 §15.3.1
Rectangular with rounded corners	1.0	2.5	0.9 for $\theta_w \leq 30^0$ 1.0 for $\theta_w > 30^0$	AS 4997-2005 Table 5.3 S6349, Table 7 AS 5100.2 §15.3.
Octagonal Pile	1.4	2.2	0.9 for θw ≤ 300 1.0 for θw > 300	BS 6349-1:2000 Table 7, C_I - based on square with corner to flow. C_L is based on rectangular shape.

Note: θw is the fluid approach angle to a wall pier.

2.10.4 Wave loading – free surface effect

At the free surface the pressure exerted by a wave must in theory be only atmospheric. A common assumption is to use a 'stretching formula' from full hydrodynamic forces at the SWL to atmospheric pressure at the free surface (Chakrabati 1987).

Some codes recommend ignoring this effect and conservatively extending the full wave hydrodynamic forces to the free surface (CEM 2005). KBR will adopt the CEM 2005 approach.

3 Loads

3.1 DEAD LOADS

The unit weight of concrete will be taken as 24.5 kN/m³.

The unit weight of carbon steel will be taken as 78.5 kN/m³.

The unit weight of stainless steel will be taken as 80.0 kN/m³.

The unit weight of timber will be taken as 10 kN/m³.

The unit weight of salt water will be taken as 10.07 kN/m³.

3.2 LIVE LOADS

The design working live loads for restricted access, as given in the Design Brief from BCC and as detailed in AS 3962-2001, are:

- Uniformly distributed load = 5 kPa for strength calculations, to be applied in such a way to create the worst effects
- Uniformly distributed load = 3 kPa for stability calculations, to be applied to create the worst effects
- Concentrated load = 4.5 kN.

For unrestricted access, the design working live loads, as detailed in AS 3962-2001, are as follows:

- For gangways: a uniformly distributed load of 4 kPa and a concentrated load of 4.5 kN
- For fixed structures, a uniformly distributed load of 5 kPa over the deck plan and a concentrated load of 4.5kN
- For floating structures, the structural live loads should be designed for:
  - a uniformly distributed load of 3 kPa over the deck plan and parts of the deck plan producing the worst case
  - a concentrated load of 4.5 kN
  - an allowance for the live load imposed by gangways.

3.3 LOAD FACTORS AND COMBINATIONS

Load factors and combinations were developed in accordance with AS 4997-2005 Section 5.12. These are shown in Appendix B.

For serviceability calculations, for any loads that are applied at or relative to the water level, that water level will be taken as Highest Astronomical Tide, as given in Section 2.

Adopt capacity reduction factor as per materials code, 0.55 to be used for geotechnical strength.

3.4 SEISMIC

The minimum design earthquake loads shall be in accordance with AS 1170.4-2007.

3.5 CONSTRUCTION LOADS

It is assumed that construction loads which occur during the installation of the works will not exceed the design loads documented in this report.

3.6 WIND LOADS

Ultimate wind loads will be calculated in accordance with AS 1170.2-2002 and the following criteria:

- 500 year ARI wind
- Terrain Category 2
- Wind Region B
- 3 m elevation
- directionality coefficient of 0.95 on major structural elements and 1.0 on minor structural elements (rafters, battens and cladding)
- 30 second duration wind load on pontoon and vessels as per AS 3962-2001.

3.7 BERTHING AND ACCIDENTAL BERTHING LOAD

The berthing load is a function of both the applied energy and the fender used to absorb that energy. A stiff fender will produce a higher reaction where a soft one will produce a smaller reaction. Therefore, the fenders will be selected with guidance from a manufacturer and an appropriate load applied.

3.8 MARINE GROWTH

Marine growth (e.g. seaweed, barnacles and oysters) will attach to structures below MHWS and increase hydrodynamic loads.

Table 3.1 Marine growth

Performance indicator	Criteria	Reference
Growth per exposed face	100 mm thick from MHWS to the seabed. Refer Table 2.2 for a definition of MHWS	BS 6349: Part 1: 1984, Figure 39

3.9 FLOOD LEVELS AND LOADS

BCC'S Q100 Flood Level for the Hoogley Street site is +4.95 m AHD based on flood data received from BCC in late June 2009. The corresponding velocity at Hoogley Street for the Q100 Flood Level is 1.8 m/s.

KBR received earlier advice from BCC in January 2009 that the Q100 flood velocities varied from 1.5 - 2.02 m/s at the site for the Q100 Flood Level and therefore 2.02 m/s has been adopted as the flood current for design.

The Q100 flood levels and velocities will be used for the design of all structures with the exception of:

- Where elements of the structures (e.g. the roof) are above the Q100 flood level they will been designed to resist wind load only.
- Pontoon pile top level will be determined using the Defined Flood Event Level.

Forces derived from the Q100 Flood Event will be treated as working loads, and will be scaled up by 1.5 to obtain ultimate loads for design.

4 General design details

4.1 PILING DESIGN

The borehole results from the geotechnical investigation undertaken at the site of the proposed new terminal (City Design – Ground Engineering, 2009) can be found in Appendix C. The geotechnical parameters adopted in the design are tabulated on Page 2 of the geotechnical report.

For piles subject to uplift loads, two-thirds of the shaft adhesion in compression will be adopted to determine pile tension capacity. For laterally loaded piles, a recommended soil lateral spring stiffness is k_s = 1.3 x soil modulus/pile diameter. This formula, together with other published data, will be used to carry out a sensitivity analysis of lateral spring stiffness to evaluate the potential range in pile structural response.

4.2 PONTOON DESIGN

The pontoon will be made of steel, with concrete ballast. The pontoon will be secured in place by steel piles. A fender system will be attached to the front face to facilitate mooring of the vessels on the pontoon. The pontoon will be roofed.

4.3 GANGWAY DESIGN

The gangway will consist of a deck spanning between two trusses, which will be made from aluminium RHS, PFC and CHS sections. The truss will be fully welded. The gangway will be roofed.

4.4 WALKWAY DESIGN

The walkway will be a precast concrete superstructure supported by steel piles. The walkway will be roofed and will be the connection from land to the gangway.

4.5 LAND BASED WAITING AREA

The land based waiting area will be located on the site of the existing shelter. It will be a suspended slab structure covered by a roof. The slab will be suspended between concrete beams cast in-situ and spanning between steel piles. It will incorporate seating, bicycle racks, signage and toilets for the bus operator. The toilets will be DDA compliant.

BCC.133.0596

4.6 EMERGENCY LADDERS

AS 4997-2005 recommends that emergency ladders be provided at no greater than 60 m intervals. Therefore emergency ladders will be provided on the pontoon to enable emergency access from the water.

4.7 SERVICES TO BE INCLUDED

The following services (and their capacity) will be allowed for in the design.

4.7.1 Fire fighting

No fire mains service will be provided on the works. A fire hydrant in the street will be used.

4.7.2 Lighting

The lighting will be designed in accordance with the DDA requirements.

4.7.3 Potable water supply

A 20 mm pipe will be provided to supply water for cleaning the waiting area and the pontoon. No drinking fountains will be provided.

4.7.4 Recycled water

Water tanks will be provided to collect rain water from the land based waiting area roof.

4.7.5 Power supply

Power will be supplied to the waiting area and pontoon. A general power outlet will be provided at both the waiting area and the pontoon.

4.8 SERVICES THAT WILL NOT BE INCLUDED

The following are services that will not be included in the works:

- cold ironing (power supply to berthed vessels)
- vessel telecom
- sullage pump out
- vessel water supply
- vessel fuelling
- CCTV monitoring (although spare conduit space will be provided for future installation)
- distress alarm.

5 Safety

5.1 SAFETY APPROACH

All aspects of the design will be considered for their safety impacts both during construction and throughout its service life.

The project reviewer will consider safety aspects during the review of the design.

Some of the specific items that will have obvious safety considerations in the design will be:

- hand rails
- surface treatment and drainage
- accidental berthing provision in design of pontoon
- transparency of structures to deter unwanted anti-social behaviour
- adequate lighting.

5.2 RESIDUAL RISKS

Residual risks are those that are present throughout the service life of the structure that cannot be completely eliminated. These risks apply mainly to the day-to-day users of the terminal, and therefore require the most attention.

Detailed below are some of the identified residual risks for the West End Ferry Terminal.

5.2.1 Jumping off

People might attempt to jump off the works into the water. As the water can be shallow at low tide, this could result in serious injury.

The handrails will be designed to restrict climbing opportunities.

The pontoons will have emergency ladders installed at either end to allow access back onto the pontoon if someone should fall or jump in the water. These will be designed to restrict casual/malicious use, and only provide access for people in emergencies.

5.2.2 Climbing the handrail

The risk is that someone might attempt to climb the handrail and possibly fall/jump over the edge. This risk is mitigated by the design of the handrail – it will be designed according to the Building Code of Australia's non-climbable handrail requirements (to be confirmed).

5.2.3 Vessel impact

There is a risk of injury if a vessel was to accidentally impact the pontoon whilst passengers are waiting on the pontoon.

This is mitigated in two ways. Firstly, the design of the pontoon and piles is to restrict the lateral acceleration experienced by a waiting passenger to a suitable limit. Secondly, signs and markings on the deck of the structures will be installed to deter passengers from queuing on the pontoon.

5.2.4 Vehicle/pedestrian collision

There is a risk of a pedestrian being struck by a motor vehicle in the Hoogley Street area adjacent to the ferry terminal.

This risk can be mitigated by the provision of bollards along the interface of the road and the pedestrian areas.

5.3 CRIME PREVENTION THROUGH ENVIRONMENTAL DESIGN

The design will consider the requirements of BCC's Crime prevention through environmental design (CPTED) planning scheme policy. In particular lines of sight, adequate lighting and the avoidance of public access to spaces that are not highly visible will be considered.

Appendix A

BRISBANE CITY COUNCIL DESIGN BRIEF

DESIGN BRIEF

BRISBANE CITY COUNCIL

TITLE:

WEST END FERRY TERMINAL REPLACEMENT

REFERENCE:

West End Ferries

DIVISION AND BRANCH:

Brisbane Infrastructure Division
Transport and Traffic Branch
Public Transport Unit

Author:	[redacted]
Officer Code:	PETI10
Creation Date:	1-09-2008
Last Updated:	7 November 2008
Document Control Number:	West End
Version:	1.1
Document Status:	Final

Control Copy No.: _____

Brisbane Infrastructure Division
Transport and Traffic Branch
Public Transport

Design Brief

Distribution List

00	01/09/08		[redacted]	PTI	Principal, Transport Infrastructure
1.0	10/10/08			SCFO	Senior Co-ordinator Ferry Operations
1.1	07/11/08			SCFO	Senior Co-ordinator Ferry Operations
1.2	07/11/08			A/PUT	A/Principal PT

TABLE OF CONTENTS

1.0 BACKGROUND 4

2.0 PURPOSE 4

3.0 SCOPE 5

3.1 General 5

4.0 OBJECTIVES 5

4.1 Strategic Objectives 5
Planned Transport Outcomes and Deliverables *5*
4.2 Project Objectives 5

5.0 DESIGN REQUIREMENTS 6

5.1 General Requirements: 6
5.2 Live Loads 6
5.3 Berthing Load 7
5.4 Environmental Loads 7
5.5 Serviceability Criteria 7
5.6 Piling to Pontoon and Berthing Piles 8
5.7 Pontoon 8
5.8 Gangways 9
5.9 Lighting 10
5.10 Accessibility 10
5.11 Safety and Security Features 10
5.12 Environmental Issues 10
5.13 Waiting Area 11
5.14 Information and Signs 11
5.15 Electrical 11
5.16 Landscaping 11
5.17 Transport Interfaces 11
5.18 Bus Operator Amenities 12
5.19 Bicycle Shelter 12

6.0 STAKEHOLDER CONSULTATION 12

7.0 COSTS 12

8.0 DATA AVAILABILITY 12

9.0 OUTCOMES AND METHODOLOGY 13

9.1 Design and data presentation 13
9.2 Approvals 13
9.3 Timing 13
9.4 Consultation 13
9.5 Outcomes/ Deliverable's 13

10.0 MANAGEMENT 13

10.1 Fees 14
10.2 Payment Schedule 14
10.3 Variation of Works 14
10.4 Termination of the Project 14

11.0 CONTRACT 14

12.0 PROPOSAL 14

1.0 BACKGROUND

The West End Ferry Terminal is located at the end of Hoogley Street, adjacent to Orleigh Park in the suburb of West End.

The terminal was constructed many years before the introduction of CityCats in 1996, and needs to be replaced in accordance with the Brisbane City Council's Asset Management Plan.

The terminal is one of the busier stops, used by around 6,000 to 6,500 CityCat passengers per week. It is anticipated that patronage will continue to grow, given the increase in public transport and CityCat forecasted patronage in Brisbane.

The new ferry terminal at this location shall provide:
- Strong connectivity to Orleigh Park via bikeway connections;
- Redevelopment/reuse of the existing bus terminus; and
- Additional mooring facilities for the Brisbane City Council's contracted ferry operator, currently TransdevTSL.

The existing terminal precinct consists of a waiting shelter, bike shelter, public and bus operator toilets, jetty, gangway and pontoon.

The existing waiting shelter is to be replaced, and the new structure shall follow an architectural theme that generally reflects, with enhancements, the theme established with the Regatta ferry terminal.

The viability of the existing bike shelter is being assessed by Active Transport and a decision on its future is expected by January 2009.

The existing West End Ferry Terminal does not comply with the Disability Discrimination Act 1992 (DDA), particularly with regard to gangway slope and width and it is expected that the proposed upgrade will be compliant with the relevant DDA standards.

As part of the structure is to be located over water, approval from the Harbour Master (MSQ) and the Department of Natural Resources and Water (DNRW) will need to be gained. As the adjacent Orleigh Park is heritage listed, relevant approvals will also need to be attained from the Environmental Protection Agency (EPA). Although it is required that the design consultant provide necessary design information and input required for the approval process, all discussions and approvals with relevant planning authorities shall be coordinated by the Brisbane City Council, in order to facilitate and optimise the approvals process.

2.0 PURPOSE

Purpose of the project

The purpose of the project is to:

- replace the West End ferry terminal with well designed and compliant structures
- make best use of innovative and sustainable design technologies and materials
- provide a facility which is sustainable and energy efficient;
- provide a facility which employs Crime Prevention Through Environmental Design (CPTED)
- cater for increase passenger usage (including increased waiting area and easy access)
- provide a sheltered gangway and pontoon;
- provide a pontoon which enables dual berthing of two CityCat vessels;
- provide the opportunity to moor one or two CityCats overnight;
- provide 1 to 2 crew car parks at or near the ferry terminal;
- support active travel outcomes with connectivity to nearby parkland and walkways;
- provide a Cultural Management Plan; and
- minimise the disruption to the CityCat ferry services during the construction stage through the implementation of an innovative design and construction methodology.

3.0 SCOPE

3.1 General

The proposed works are for the design of a ferry terminal, pontoon and gangway system and associated works for the upgraded passenger ferry terminal facility at Hoogley Street, West End.

The Design Consultant shall prepare detailed final construction drawings, specifications and engineering certification suitable to obtain approval of Prescribed Tidal Works and Marine Plant Permits or any other approvals as required by State or Local Government legislation including:

- Integrated Planning Act 1997;
- Disability Discrimination Act 1992;
- Coastal Protection and Management Act 1995; and
- Environmental Protection Act 1994.

Lodgement for all necessary approvals shall be the responsibility of the Brisbane City Council. However, due to the nature and complexity of the approvals process, it is expected that the Consultant will determine the design outcomes in consultation with the relevant approval authorities, the Transport & Traffic Branch (Public Transport), and the relevant internal and/or external Planning and Heritage Authorities. All discussions and approvals with relevant planning authorities shall be coordinated by the Brisbane City Council, in order to facilitate and optimise the approvals process.

4.0 OBJECTIVES

4.1 Strategic Objectives

Planned Transport Outcomes and Deliverables

The project contributes to the delivery of strategic objectives outlined in the Transport Plan for Brisbane 2008-2026 as detailed below:

Strategic Objective 1 – Quality Public Transport

Outcome: *Public transport is the preferred mode of travel to the city's major centres. It provides a high level of access to all facilities and services in Brisbane, reducing the need to use a car. General improvements to ferry services, such as high quality interchanges and improved passenger information.*

Deliverable: *New and upgraded ferry terminals will build on the success of the CityCats. A continuing program of upgrades to existing ferry terminals is proposed to safely cater for increasing passenger demand through to 2026.*

4.2 Project Objectives

The primary objective of this project is the cost-efficient and timely delivery of a ferry terminal which takes the following principles into account:

- Consistent with the purpose of the project (section 2.0) the Brisbane City Council strategic objectives outlined above;
- An architectural theme that generally reflects, with enhancements, the theme established at the recent Regatta ferry terminals;
- Safe and accessible (including DDA-compliance)
- Suitable for CityCat and the Brisbane City Council monohull ferry services;
- Sympathetic to the surrounding environment and protects the heritage values of the

adjacent Orleigh Park;
- Operationally-efficient;
- Convenient to use;
- Accessible for passengers, masters, maintenance crews and bus operators;
- Interfaces with adjoining bikeway and park land;
- Economical to clean, repair and maintain;
- Use of smart technology and innovation;
- Use of efficient and green energy sources;
- Enable dual (and simultaneous) berthing of two CityCats;
- Able to be constructed in the minimum possible timeframe;
- Minimises impact on CityCat operations during construction; and
- Conforms with relevant codes and Australian standards.

5.0 DESIGN REQUIREMENTS

The principal requirements are as follows:

5.1 General Requirements:

The pontoon and major components shall have a minimum design life of 30 years. All components shall be designed for low maintenance and to remain in a reasonable condition for the life of the pontoon as well as considering 'whole of life costs'. The system and components shall be suitable for the specified design criteria.

The general design criteria are:

- To be in accordance with AS4997 "Guidelines for the design of maritime structures" and AS3962: 2001
- Be suitable for all vessels up to 36 T.D.W.
- To have 900mm minimum freeboard unloaded
- The access to the structure shall consist of an aluminium gangway supported on-shore by a concrete foundation with the outer end seated on the pontoon.
- The pontoon and gangway shall have a non slip surface free from longitudinal joints.
- The pontoon and gangway are to be designed to conform to all DDA and relevant Australian codes and requirements of relevant Authorities.
- The design is to be consistent with the objectives for the project listed above.
- It must allow for efficient management of vessel movement. The design must take into account operational and maintenance issues identified by the Brisbane City Council's ferry operator.
- The design must be appropriate for normal peak and neap tides and address the effects of 1 in 100 year flood levels and the associated current velocity on floating structures. Detailed flood/tidal river current flow analysis will need to be carried out. A flood level consideration of +2.5m AHD with a defined flood current equal to 2.13m/s will also need to be incorporated into the design.
- The articulated section of the gangway shall not prevent the pontoon rising during a storm event up to Q100 [3.4m AHD].
- The 30 Year design life sea level rise of 0.2m is to be accounted for in the design (as per table 2.3 from AS 4997:2005)
- Selection of design and materials should be based on "whole-of-life" costs.

5.2 Live Loads

Minimum Live Load:
- 5kPa Structural
- 3 kPa Stability
- 4.5 kN concentrated load
- Comply with EPA "Operational Policy – Building and Engineering Standards for Tidal Works"

5.3 Berthing Load

The pontoon and its components need to be designed for the berthing loads arising from a 36T vessel striking the structure at 15 degrees at a velocity of 0.5m/sec.

In addition, the pontoon and its components need to be designed for **accidental berthing loads** arising from a 36T vessel striking the structure at 45 degrees at a velocity of 3.0m/sec.

5.4 Environmental Loads

The pontoon shall be designed for the following environmental conditions:

Wind Waves: The consultant will be required to calculate the maximum fetch and in order to estimate the design wave heights at the site adopt:

- regional basic design wind three second gust velocities from AS 1170.2:2002, Zone B.
- assume a storm duration of 1 hour
- mean wind speeds over the duration of the storm being a conversion of the three second gust from AS 1170.1 using the method in the CEM 2001, Fig II-2-1.

Key assumptions are:

- Perfect coincidence between the flood/storm tide peak, the design wave peak and the design wind peak. This assumption is adopted because the floods, storm tide and wind waves are being generated by the same meteorological event – a tropical cyclone.
- The design wave height is H1% from AS 4997-2005, Clause 5.9.2, where H1% is the mean of the highest 1% of the waves.

The adopted design waves are to be confirmed by the consultant.

Waves from Vessels: All components of the system shall be designed for the largest waves expected to be produced by vessels using the stretch of the river during the life of the structure, but the design waves shall be no less than 0.6m with periods ranging from 4-6 seconds.

Current Loads: The pontoon system will be designed to the water levels, velocities and debris build up for a Q100 flood. The design flood height and velocity for a Q100 flood at this location is to be in accordance with Q100 for the St Lucia reach of the river.

The pontoon is required to stay attached to the pile during this event, but a suitable tethering system should be detailed to retain the pontoon and gangway (if required) on-site should this event (and the height of the piles) be exceeded.

Tidal Levels: The pontoon is required to be useable throughout all ranges of tidal levels which should be calculated in accordance with Q100 for St Lucia reach of the river.

Wind: The ultimate limit state wind shall be taken as 51.3 m/s (AS 1170.2, R=500, $M_{(z,cat)} = 0.9$). The design shall account for 27m x 7m beam vessel in any position along the pontoon. The vessel wind area is to be in accordance with AS3962 Table 4.4.

5.5 Serviceability Criteria

The pontoon shall be designed for the following serviceability criteria:

Acceleration: The pontoon shall be designed to have a maximum lateral acceleration at the commuter centre of gravity of $A_h < 2.5m/s^2$.

Surface: The pontoon surface shall have a non-slip concrete surface. The surface shall be Wet Pendulum Test Class V to AS/NZS 4586, Table 2.

Articulation: The pontoon system should be designed so that the pontoon remains on the piles up to and including a Q100 event. The RL of the top of the pile, not including the pile cap shall be

such that it is 1.0m higher than the Q100 event. The design should also allow for all components of the system to be retained at the site by way of an anchor system designed for all events up to and including the Q100 level. The gangway connection at the shore abutment shall allow for the raising of the pontoon above the level of the abutment with no permanent damage to all components during flood events.

Vandalism: The pontoon, piles and components shall be designed to be resistant to vandalism.

5.6 Piling to Pontoon and Berthing Piles

- Provide piles consistent with the design and the ferry operational requirements of the terminal;
- Location, number and impact capacity of piles are to be determined based on consultation with the Brisbane City Council and Council's ferry operator, TransdevTSL and in accordance with the relevant Australian codes;
- Provide piles configured to enable safe docking of a 25-metre, 36-tonne CityCat, and overnight mooring of up to 2 CityCats.
- Maintenance of the wearing components of the piles is not to interrupt ferry operations and to be designed to minimise maintenance;
- Design moveable elements on the piles that minimise nuisance noise to surrounding properties.
- Allowance for cathodic protection for steel piles (if applicable).
- A scour and accretion allowance will need to be considered and these allowances will be dependent on geotechnical investigations that have occurred to date.

Materials: Concrete-filled steel piles with High Density polyethylene sheathing are to be used. All piles shall have suitable PVC, Polyethylene or GRP pile caps.

The concrete filling shall be tremmied to the bottom of the closed pile section and adequate vibration provided to ensure sound dense concrete. The high-density polyethylene sheathing shall penetrate into the riverbed for a minimum distance of two (2) metres to ensure a watertight seal.

Location and Clearance: Restraining piles shall be located outside the pontoon area and are to be located along the front and end faces of the pontoons.

The responsibility for the pile design including location and number of restraining piles, correct levelling and setting out of the piles to suit the pontoon system shall rest with the Designer (Consultant). For the pontoon restraining piles, the finished pile position and rake of the piles shall be such that the operation of the restraint brackets is not impaired over tidal range levels.

All piles shall be driven, bored or jetted into final position in the locations and within the nominated tolerances.

5.7 Pontoon

- Design, ballasting and fixing of the pontoon to allow vertical movement, to control movement in the horizontal plane due to waves and tidal flow, and to minimise eddying;
- Design to be based on normal peak tides and 100-year flood level and associated current velocity;
- Provide ready, watertight, internal access for maintenance;
- Provide for easy removal of the pontoon and gangway for maintenance;
- Provide berthing bollards on the pontoon that allow safe tie-off at all times (without assistance from engine);
- In the event of the pontoon sinking, provide for the ability for the pontoon to be retrieved;
- Provide for day-to-day maintenance so as to not interrupt ferry operations;
- Design moveable elements of the pontoon, gangway and walkway to minimise nuisance noise to surrounding properties;
- Provide potable water outlet for maintenance purposes of both facility and ferries

- Provide cover and DDA-compliant lighting for boarding and alighting passengers.

The pontoon shall be constructed from steel with concrete ballast. All reinforcement shall be stainless steel.

All concrete work shall comply with the requirements of AS4997 and AS3962:2001 and concrete cover shall be designed for exposure classification "C" (AS3600).

Pontoon segments: The joints between the pontoon segments shall be as follows:

- Maximum gap 10mm

Tolerance: The pontoon shall be manufactured to the following dimensional tolerances:

- Width and height +/- 5mm
- Out of square +/- 5mm

Restraint: The pontoons shall be restrained by the use of HDPE rubbing blocks in grade 316 stainless steel brackets, around the pontoon piles. The use of aluminium, in lieu of grade 316 stainless steel, will not be accepted.

Secondary Restraint: The pontoons shall be fitted with flood restraint chain(s) with a capacity to prevent the pontoon from being washed away during flood events greater than Q100 flood event.

Mooring Cleats: Aluminium or stainless steel mooring cleats shall be fitted to the pontoon at a maximum of 3 metre centres.

Uniform Displacement: The pontoon shall sit level in the water with uniform freeboard on all sides when loaded by the gangway dead load at mid-tide.

Fixing: All bolts shall be Grade 316 (UNS S31600) A4-70. Nuts shall be duplex 2205 grade (UNS S31803). Washers shall be 316 (UNS S31600), electropolished or passivated.

Nuts and bolts shall comply with ISO 3506 identifications or, if not so marked, shall be provided with mill or NATA certified test result confirming grade strength.

Bolts shall have rolled threads. The nuts and washers shall be electropolished or passivated in nitric acid.

Bolts shall be tightened to the manufacturer's recommended torque using a torque wrench. Nuts shall be lubricated with an anti-seize, nickel based lubricant subject to the approval of the superintendent.

Handling of stainless steel: Stainless steel material should not be stored with carbon steel. Tools used for carbon steel shall not be used to fabricate or assemble stainless steel components.

Fenders: Both sides of the berthing pontoon (other than the ends shall have a fender system suitable to protect the pontoon and boats from damage over all tidal conditions and wave action. Fenders shall be of either rubber or fibre composite material. Timber fenders will not be accepted.

The gangway shall land on the pontoon in a recess such that the gangway finishes level with the pontoon deck. A stainless steel or aluminium cover plate shall be provided to cover the gap between the gangway and pontoon.

5.8 Gangways

- Ensure passenger movements are efficient with an emphasis on safe embarking and disembarking.
- Be DDA-compliant for two way access;
- Be of sufficient length for compliance with DDA maximum and minimum grades.

- The gangway should be designed to:
  - Be adjustable to accommodate differing ferry deck heights and to have minimal gap between the pontoon and the vessel;
  - Have minimal independent movement due to wave action;
  - Provide step-free, non-slip walking surfaces with covered flaps at all moving connections;

- The gangways shall be of aluminium construction, shall have handrails 1100 high both sides, and be provided with childproof infill.
- The junctions between the gangways, the headstock and insitu landing and pontoon shall not present a trip hazard.
- The decking shall be Life Long fibre composite decking fixed in accordance with the manufacturer's recommendations.
- The width shall be 1.8m inside handrails
- Provide cover and lighting for boarding and alighting passengers.

5.9 Lighting

Lighting design of the facility is to be in accordance with relevant DDA and relevant Australian standards with preference given to low energy lighting options such as LED. The preferred lighting is directed downwards onto the gangway and pontoon. The lighting system shall not create a glare nuisance for traffic on the river, or for vessels berthing on the pontoon.

- Lighting levels within the waiting areas and on the walkway and gangway are to be minimum of 200 lux, 12 months after the commencement of operations, with the glare to be managed so as not to interfere with navigation or adjacent properties;
- Safe lighting levels are to be achieved in all other areas, particularly access to Hoogley Street in accordance with the code;
- Provide emergency lighting;
- Provide navigational lighting in accordance with the Regional Harbour Master's requirements;
- Provide light onto piles and to the edge of the pontoon to meet ferry operational needs.

5.10 Accessibility

- Ensure access to the site and all areas of the ferry terminal satisfy the Brisbane City Council's accessibility policies and obligations;
- Obtain certification from an independent accredited Consultant that the proposed design does and the completed ferry terminal will meet the appropriate DDA and relevant Australian codes;
- Ensure efficient access for passengers, ferry operator's and maintenance crews
- Ensure passenger and vessel movements are efficient.

5.11 Safety and Security Features

- Passive design is to be primary means of ensuring user safety and ferry terminal security including minimisation of vandalism;
- Provision for future installation of CCTV equipment for the safe monitoring of all areas;
- Employ Crime Prevention Through Environmental Design (CPTED) principles in the design;
- Provide for safe ferry operations with appropriate approvals given by qualified Workplace Health and Safety officers in the field of Marine Engineering;
- Ensure the site and the ferry terminal is accessible for emergency services.
- Ensure design prohibits unauthorised access to ferries moored at this location overnight.

5.12 Environmental Issues

- Provide tanks to collect rainwater from structures for cleaning/maintenance with mains backup;
- Capture and treatment of runoff from cleaning and maintenance procedures

- Compliance with necessary environmental approvals and permits.
- Consider any noise amelioration measures.
- Design to consider and minimise the effects on river walls of day-to-day operations.
- Design should take into consideration the impact of services on neighbouring properties, particularly the property downstream of the terminal.

5.13 Waiting Area

- Construction of a new land-based waiting area structure.
- Be environmentally-sympathetic to the surrounding structures.
- Be easy to clean and maintain.
- Be built in vandal-resistant materials.
- Provide adequate cover and shelter from the elements including low-angle sun and rain.
- Provide natural ventilation for summer months.
- Provide non-slip, free-draining walk surfaces.
- Provide adequate seating.
- Facilitate litter and debris containment.
- Treatment of rain and cleaning water run-off with rainwater harvesting.
- Install a clock with emergency power backup which is also visible to passengers in the waiting area and when reading the information board and to the ferry master.
- Provide treatment of rain and clearing water runoff to remove litter and debris.
- Provide crowd-control elements which retain waiting passengers within the waiting areas until disembarking passengers have cleared the gangways.
- Provide in the design for installation of, at a later date, a public address system, a CCTV surveillance system, electronic ticketing, duress button and electronic public transport passenger information system and provide conduits for these.
- Provide best practice DDA-compliant lighting using latest sustainable technology.

5.14 Information and Signs

- Provide prominent signage showing the name of the ferry terminal, visible day and night, from the land and water in general accordance with Regatta terminal;
- Provide static timetable cases for ferry and nearby bus services and operational information, in consultation with the Public Transport Unit and the Brisbane City Council's ferry operator, TransdevTSL. This design and placement shall be generally consistent with the most recently developed CityCat terminals (i.e. Regatta);
- Provide all necessary signs including directional signs, safety signs and locational plans that have some multi-lingual content and meet the needs of the sight-impaired and comply with Australian Standards AS 1428.1 (2001) and AS 1428.2 (1992);
- Provide "no smoking" signs at the entry to the facility mounted over appropriate disposal containers;
- Signs are to be consistent with public transport sign standards. The Brisbane City Council's ferry operator, TransdevTSL, should be consulted in relation to their standard signage rollout.

5.15 Electrical

- Earth all metal structures and provide signage to that effect;
- Provide secure, waterproof power points for maintenance use;
- Provide a control system, to manage navigational and other lighting;
- Laying of segregated communications and data cabling conduits for future installation of electronic ferry arrival and information displays and electronic ticketing machines.

5.16 Landscaping

- Determine opportunities to provide landscaping to enhance the surrounding environment;
- Landscaping is not to diminish passenger safety;
- Provide relevant street/park furniture including garbage bins.

5.17 Transport Interfaces

- Provision of passenger set-down facilities and the bus interchange at the end of Hoogley Street, particularly addressing safety concerns for pedestrians;

- Provide safe and accessible interface of ferry passengers and bikeway users both on and off the facility;
- Incorporation of the West End Ferry Terminal Access Audit findings into the design.

5.18 Bus Operator Amenities

- Provide separate male and female bus operator toilet facilities;
- Provide relevant fittings including:
  - Hand basin (either one central hand basin for both male and female, or individual hand basins, depending on available space and layout;
  - Stainless steel 3-in-1 cabinet/s (liquid soap and shelf, handtowel dispenser and mirror);
  - Stainless steel dual toilet roll holders (standard design currently provided by Brisbane Transport);
  - Exhaust fans, sensor-operated lights (no switches), rubbish bins, coat hooks;
  - Toilet cubicle locks separately-keyed (as per standard locks/keys currently used by Brisbane Transport);
- Provide a safe area to enter and exit the toilet facilities.

5.19 Bicycle Shelter

- Incorporation of the existing bicycle facility into the design, whether in its existing location or dismantled and relocated on-site.
- Powder-coating or other treatment to blend with the new ferry terminal's overall design.

6.0 STAKEHOLDER CONSULTATION

The Brisbane City Council will facilitate key stakeholder consultation in the production of an appropriate design. Key stakeholders identified to date are as follows:

- Turrbal & Jaggera
- Councillor Helen Abrahams
- BCC internal stakeholders
- TransdevTSL

The Brisbane City Council will be responsible for preparing a communication plan for the project and will be the lead agent in managing stakeholder communications in conjunction with the Design Consultant.

7.0 COSTS

The final design report shall include the following;

- Detailed construction cost estimate
- Services alteration costs (if applicable)

8.0 DATA AVAILABILITY

It is anticipated that the Brisbane City Council will be able to supply the following information to the Consultant who will be undertaking this study at the pre start meeting.

- Existing Terrestrial Services and Hydrographical information
- Existing Geotechnical Reports
- Existing Bimap information (field confirmation required).
- CityCat Patronage data
- West End Ferry Terminal Access Audit.

Please note that this information will be made available to the Consultant for information only. The Brisbane City Council does not accept any responsibility for the accuracy or interpretation of the data provided. Allowance should be made for any other material or investigation required for the design process and should be identified in the Consultant's response to the brief.

9.0 OUTCOMES AND METHODOLOGY

9.1 Design and data presentation

The Design Consultant shall prepare detailed final construction drawings, specifications and engineering certification suitable to obtain approval of a Prescribed Tidal Works and Marine Plant Permits or any other approvals required by the State or Local Government Authorities including Integrated Planning Act, Coastal Protection and Management Act, and Integrated Development Assessment Scheme. The Contractor shall comply with all EPA requirements.

At the conclusion of the work, the final report and all working material will become the property of the Brisbane City Council.

Design Drawings should be prepared in Auto Cad Format.

9.2 Approvals

Lodgement for all necessary approvals shall be the responsibility of the Brisbane City Council. However, due to the nature and complexity of the approvals process, it is expected that the Consultant will determine the design outcomes in consultation with the relevant approval authorities, the Public Transport Unit, and the relevant internal and/or external Planning and Heritage Authorities. All discussions and approvals with relevant planning authorities shall be coordinated by the Brisbane City Council, in order to facilitate and optimise the approvals process.

9.3 Timing

- Submission of Design Proposals — 24 November 2008
- Award of Design Contract — 1 December 2008
- Completion of Detailed Design /Documentation — 10 April 2009

The Consultant shall include a detailed program with their proposal.

9.4 Consultation

The Brisbane City Council shall carry out all consultation with external Stakeholders and the public.

9.5 Outcomes/ Deliverable's

The Consultant will be required to submit:

- Construction Drawings,
- Construction Schedules,
- Specifications,
- Certification and reports suitable for inclusion in final tender documentation;
- Construction Cost Estimate

10.0 MANAGEMENT

Contact shall be maintained between the Design Consultant and the Public Transport Unit throughout the course of the design process. It shall be the responsibility of the Consultant to ensure this occurs. Formal progress reports are required on a fortnightly basis and progression past agreed hold points (if any) to be discussed between the Consultant and the Public Transport Unit. It is anticipated that fortnightly progress meetings be scheduled for the duration of the project. The nominated Project Manager in Public Transport for this project is Lee Marshall on Tel 0418 748 192.

10.1 Fees

- The Consultant shall, in submitting a proposal to this brief, clearly indicate the cost of all design fees for the delivery of this project.
- Hourly rates of Staff/Resources cost of materials and consumables for additional work as requested.

10.2 Payment Schedule

Payment for carrying out the project is to consist of monthly invoices based on hourly rate expended up to the agreed estimated costs for the study including variations. Any expenditure over the budget has to be approved by the Project Manager.

10.3 Variation of Works

The scope of the project can only be varied upon written agreement between the Consultant and the Principal. Any variations must be approved in writing prior to any financial commitments outside the terms of the Contract/Agreement. All variations will be recorded on a change register held by the Client.

Significant personnel shall not be replaced during the course of the design process without the prior approval of the Principal.

10.4 Termination of the Project

The project may be terminated by the Public Transport Unit, with seven days notice in writing.

11.0 CONTRACT

The engagement shall be in accordance with the existing Panel Arrangement Contract for the provision of Infrastructure Design Consultancy Services for Brisbane City Council

12.0 PROPOSAL

The proposal shall include:

- An appreciation of the situation and work required;
- A detailed methodology;
- Details of staff including relevant experience to be included on the project and the Project Director;
- The level of involvement and time commitment of each staff member;
- A timetable of activities with critical report dates identified;
- Details of any services, data or other material expected to be supplied by or through the Principal;

Appendix B

LOAD COMBINATIONS

Appendix B

Load Combinations

Load combinations to be checked for design are shown in the table below. This list is not exhaustive, and if other combinations arise during the design they will be included as well.

Load Case	Limit State	Type	Description	Water Level	Dead Load	Live Load	Wind	Wave	Current Ct- Flood Act-Ambient	Debris	Mooring	Berthing	EQ
1	Ultimate	Strength	Normal Berthing	HAT	1.2 G	0.6 Q	0.0 Wd	0.0 Wv	0.0 Ct	0.0 Db	0.0 Fm	1.5 Fb	0 EQ
2	Ultimate	Strength	Normal Berthing	HAT	0.9 G	0.0 Q	0.0 Wd	0.0 Wv	0.0 Ct	0.0 Db	0.0 Fm	1.5 Fb	0 EQ
3	Ultimate	Strength	Normal Berthing	HAT	1.2 G	0.6 Q	0.7 Wd	1.0 Wv	1.0 ACt	0.0 Db	0.0 Fm	1.5 Fb	0 EQ
4	Ultimate	Strength	Normal Berthing	HAT	1.2 G	0.6 Q	1.0 Wd	0.7 Wv	1.0 ACt	0.0 Db	0.0 Fm	1.5 Fb	0 EQ
5	Ultimate	Strength	Normal Berthing	HAT	0.9 G	0.0 Q	0.7 Wd	1.0 Wv	1.0 ACt	0.0 Db	0.0 Fm	1.5 Fb	0 EQ
6	Ultimate	Strength	Normal Berthing	HAT	0.9 G	0.0 Q	1.0 Wd	0.7 Wv	1.0 ACt	0.0 Db	0.0 Fm	1.5 Fb	0 EQ
7	Ultimate	Strength	Accidental Berthing	MHWS	1.2 G	0.6 Q	0.0 Wd	0.0 Wv	0.0 Ct	0.0 Db	0.0 Fm	1.0 Fbu	0 EQ
8	Ultimate	Strength	Accidental Berthing	MHWS	0.9 G	0.0 Q	0.0 Wd	0.0 Wv	0.0 Ct	0.0 Db	0.0 Fm	1.0 Fbu	0 EQ
9	Ultimate	Strength	Accidental Berthing	MHWS	1.2 G	0.6 Q	0.7 Wd	1.0 Wv	0.0 Ct	0.0 Db	0.0 Fm	1.0 Fbu	0 EQ
10	Ultimate	Strength	Accidental Berthing	MHWS	1.2 G	0.6 Q	1.0 Wd	0.7 Wv	0.0 Ct	0.0 Db	0.0 Fm	1.0 Fbu	0 EQ
11	Ultimate	Strength	Accidental Berthing	MHWS	0.9 G	0.0 Q	0.7 Wd	1.0 Wv	0.0 Ct	0.0 Db	0.0 Fm	1.0 Fbu	0 EQ
12	Ultimate	Strength	Accidental Berthing	MHWS	0.9 G	0.0 Q	1.0 Wd	0.7 Wv	0.0 Ct	0.0 Db	0.0 Fm	1.0 Fbu	0 EQ
13	Ultimate	Strength	Mooring	HAT	1.2 G	0.6 Q	0.0 Wd	0.0 Wv	0.0 Ct	0.0 Db	1.5 Fm	0.0 Fb	0.0 EQ
14	Ultimate	Strength	Mooring	HAT	0.9 G	0.0 Q	0.0 Wd	0.0 Wv	0.0 Ct	0.0 Db	1.5 Fm	0.0 Fb	0.0 EQ
15	Ultimate	Strength	Mooring	HAT	1.2 G	0.6 Q	0.7 Wd	1.0 Wv	1.0 ACt	0.0 Db	1.5 Fm	0.0 Fb	0.0 EQ
16	Ultimate	Strength	Mooring	HAT	1.2 G	0.6 Q	1.0 Wd	0.7 Wv	1.0 ACt	0.0 Db	1.5 Fm	0.0 Fb	0.0 EQ
17	Ultimate	Strength	Mooring	HAT	0.9 G	0.0 Q	0.7 Wd	1.0 Wv	1.0 ACt	0.0 Db	1.5 Fm	0.0 Fb	0.0 EQ
18	Ultimate	Strength	Mooring	HAT	0.9 G	0.0 Q	1.0 Wd	0.7 Wv	1.0 ACt	0.0 Db	1.5 Fm	0.0 Fb	0.0 EQ
19	Ultimate	Strength	Flood Event	Defined Flood Level	1.2 G	0.6 Q	1.0 Wd	0.0 Wv	1.5 Ct	0.0 Db	0.0 Fm	0.0 Fb	0.0 EQ
20	Ultimate	Strength	Flood Event	Defined Flood Level	0.9 G	0.0 Q	1.0 Wd	0.0 Wv	1.5 Ct	0.0 Db	0.0 Fm	0.0 Fb	0.0 EQ

Load Case	Limit State	Type	Description	Water Level	Dead Load		Live Load		Wind		Wave		Current Ct- Flood Act-Ambient		Debris		Mooring		Berthing		EQ	
21	Ultimate	Strength	Flood Event	Defined Flood Level	1.2	G	0.6	Q	1.0	Wd	0.0	Wv	1.5	Ct	1.0	Db	1.5	Fm	0.0	Fb	0.0	EQ
22	Ultimate	Strength	Flood Event	Defined Flood Level	1.2	G	0.6	Q	1.0	Wd	0.0	Wv	1.5	Ct	1.5	Db	1.0	Fm	0.0	Fb	0.0	EQ
23	Ultimate	Strength	Flood Event	Defined Flood Level	0.9	G	0.0	Q	1.0	Wd	0.0	Wv	1.5	Ct	1.0	Db	1.5	Fm	0.0	Fb	0.0	EQ
24	Ultimate	Strength	Flood Event	Defined Flood Level	0.9	G	0.0	Q	1.0	Wd	0.0	Wv	1.5	Ct	1.5	Db	1.0	Fm	0.0	Fb	0.0	EQ
25	Ultimate	Strength	Dead and Live Loads	HAT	1.2	G	1.5	Q	1.0	Wd	0.7	Wv	1.0	ACt	0.0	Db	0.0	Fm	0.0	Fb	0.0	EQ
26	Ultimate	Strength	Dead and Live Loads	HAT	1.2	G	1.5	Q	0.7	Wd	1.0	Wv	1.0	ACt	0.0	Db	0.0	Fm	0.0	Fb	0.0	EQ
27	Ultimate	Strength	Dead and Live Loads	HAT	0.9	G	0.0	Q	1.0	Wd	0.7	Wv	1.0	ACt	0.0	Db	0.0	Fm	0.0	Fb	0.0	EQ
28	Ultimate	Strength	Dead and Live Loads	HAT	0.9	G	0.0	Q	0.7	Wd	1.0	Wv	1.0	ACt	0.0	Db	0.0	Fm	0.0	Fb	0.0	EQ
29	Ultimate	Strength	Dead and Live Loads	HAT	1.2	G	1.5	Q	0.0	Wd	0.0	Wv	1.0	ACt	0.0	Db	0.0	Fm	0.0	Fb	0.0	EQ
30	Ultimate	Strength	Dead and Live Loads	HAT	0.9	G	0.0	Q	0.0	Wd	0.0	Wv	1.0	ACt	0.0	Db	0.0	Fm	0.0	Fb	0.0	EQ
31	Ultimate	Strength	E'quake across	HAT	1.2	G	0.6	Q	0.0	Wd	0.0	Wv	0.0	Ct	0.0	Db	0.0	Fm	0.0	Fb	1.0	EQ
32	Ultimate	Strength	E'quake across	HAT	0.9	G	0.0	Q	0.0	Wd	0.0	Wv	0.0	Ct	0.0	Db	0.0	Fm	0.0	Fb	1.0	EQ
33	Ultimate	Strength	E'quake along	HAT	1.2	G	0.6	Q	0.0	Wd	0.0	Wv	0.0	Ct	0.0	Db	0.0	Fm	0.0	Fb	1.0	EQ
34	Ultimate	Strength	E'quake along	HAT	0.0	G	0.0	Q	0.0	Wd	0.0	Wv	0.0	Ct	0.0	Db	0.0	Fm	0.0	Fb	1.0	EQ

1. ACt - Ambient Current, Ct - Flood Current

2. Assumptions:

– Waves and Flood Current/Debris loads do not occur together as the event which generates the waves has finished prior to debris and flood waters arriving at Hawthorne.

– Vessels do not berth during a flood event.

Appendix C

GEOTECHNICAL REPORT

city design

City Design
Survey Services
West End Ferry Terminal Upgrade
Geotechnical Investigation

May 2009

Prepared by:
Ground Engineering
City Design

Prepared for:
Survey Services

Reference:
CD/T6-G1/090537PR001Apj

Date of Issue:
18 May 2009

ground engineering

BRISBANE CITY

Dedicated to a better Brisbane

REPORT

To: **Survey Services** **Date: 14/05/09**

Attn: [redacted]

CC:

From:

Re: **West End Ferry terminal**
Upgrade
Geotechnical Investigation

Ref: **CD/T6-G1/090537PR001Apj**

Brisbane City Council
Ground Engineering

Green Square South Tower
505 St Paul's Tce
Fortitude Valley QLD 4006

Phone: [redacted]
Facsimile:
Email:
Internet: www.brisbane.qld.gov.au

The Ground Engineering Group was commissioned by Survey Services to undertake an appraisal of the ground conditions at the site of a new ferry terminal in the Brisbane River, at West End.

Drilling was carried out both on land and from a barge, by Schneider Drilling. A truck mounted Gemco HC10 drilling rig was used for the land borehole, BH1/09, and a Hydra Scout on the barge. Owing to restrictions on access for the barge, the investigation was limited to one over-water borehole. The locations of both boreholes are shown on **Figure 1**, attached.

The drilling rigs were fitted with continuous solid augers fitted and TC Bit. Insitu Penetration testing was carried out at regular intervals in granular soils, to determine the nature and strength of the materials encountered and to provide samples for inspection. In clay horizons, undisturbed samples were obtained and were subjected to pocket penetrometer testing. The results of all tests are given on the attached borehole records.

All fieldwork was carried out under the full time supervision of Geotechnical Engineers from the group, who were responsible for directing the geotechnical aspects of the drilling and for and providing field logs of the soils encountered. Engineering logs of the boreholes and accompanying explanation sheets are attached.

The geological records indicate that the surface geology in this vicinity is formed by Recent alluvium associated with the Brisbane River. These alluvial deposits are typically quite thick, consisting of soft silty clays in the upper levels, underlain by river gravels usually at around -8m AHD or slightly deeper. The alluvial gravels, which typically rest directly on basement rocks of the Bunya Phyllite formation, outcrop in the river bank behind the site.

The profile from the river bank, beneath the proposed ferry terminal extension, is shown on **Figure 2**. As expected, soft silty clays were encountered in the upper levels of the alluvial stratum to around -9m AHD, at which levels gravels and sandy gravels were present.

At this site there is, however, some variability in the typical subsurface conditions was encountered. In BH01/09, the gravelly horizons below -9m AHD tend to occur as secondary units, Intercalated with very soft clay layers to an elevation of approximately -16m AHD. For lateral loading computations, cognizance of this variation in conditions will need to be taken during pile installation.

In both boreholes, the gravelly stratum rests directly on Bunya Phyllite, which exhibits little or no weathering profile.

Pile bearing capacity, for the new ferry terminal, is likely to be critical for horizontal loadings only. Thus, if a pile were to terminate a short distance above an unknown soft clay horizon, this need not present a serious problem, as would be the case for vertically loaded piles, provided the pile passes through an adequate thickness of reasonably sound overlying strata.

Values for the horizontal subgrade resistance and earth pressures, for pile design, are given in the Table below.

TABLE

Pile Design Parameters

Lithology	Coeff. Horiz. Subgrade Reaction (Kh) (kPa/m)	Coeff. Active earth pressure (Ka)	Coeff. Passive Earth Pressure (Kp)
Soft alluvial silty clay	2000-3000	0.35	≤ 4
Gravels/sandy gravels -9m to – 16m AHD	100,000-150,000	0.2 – 0.25	≤ 8
Gravels/sandy gravels Bellow -16m AHD	300,000	"	"
Phyllite	n.a.	n.a	n.a

With regard to the lateral loading contribution of the soft clay layer(s), these would normally require relatively large strains in order to develop their full resistance. In contrast, the gravelly units are

more rigid. Thus, where piles pass through a sequence of clay/gravel layers, the contribution provided by the soft clays under normal working conditions is likely to be small and might well be regarded more as a small additional factor of safety. Therefore, In order to arrive at a realistic estimate of overall lateral loading capacity of any pile, it is recommended that detailed driving records be kept so that these can be compared with the indications provided by the drilling.

With regard to the earth pressure loadings, large strains are normally required to develop any passive pressures, although active pressures typically develop at small strains.

Should you have any further queries on this investigation, please do not hesitate to contact the undersigned.





Geotechnical Engineer

Product Principal
Ground Engineering

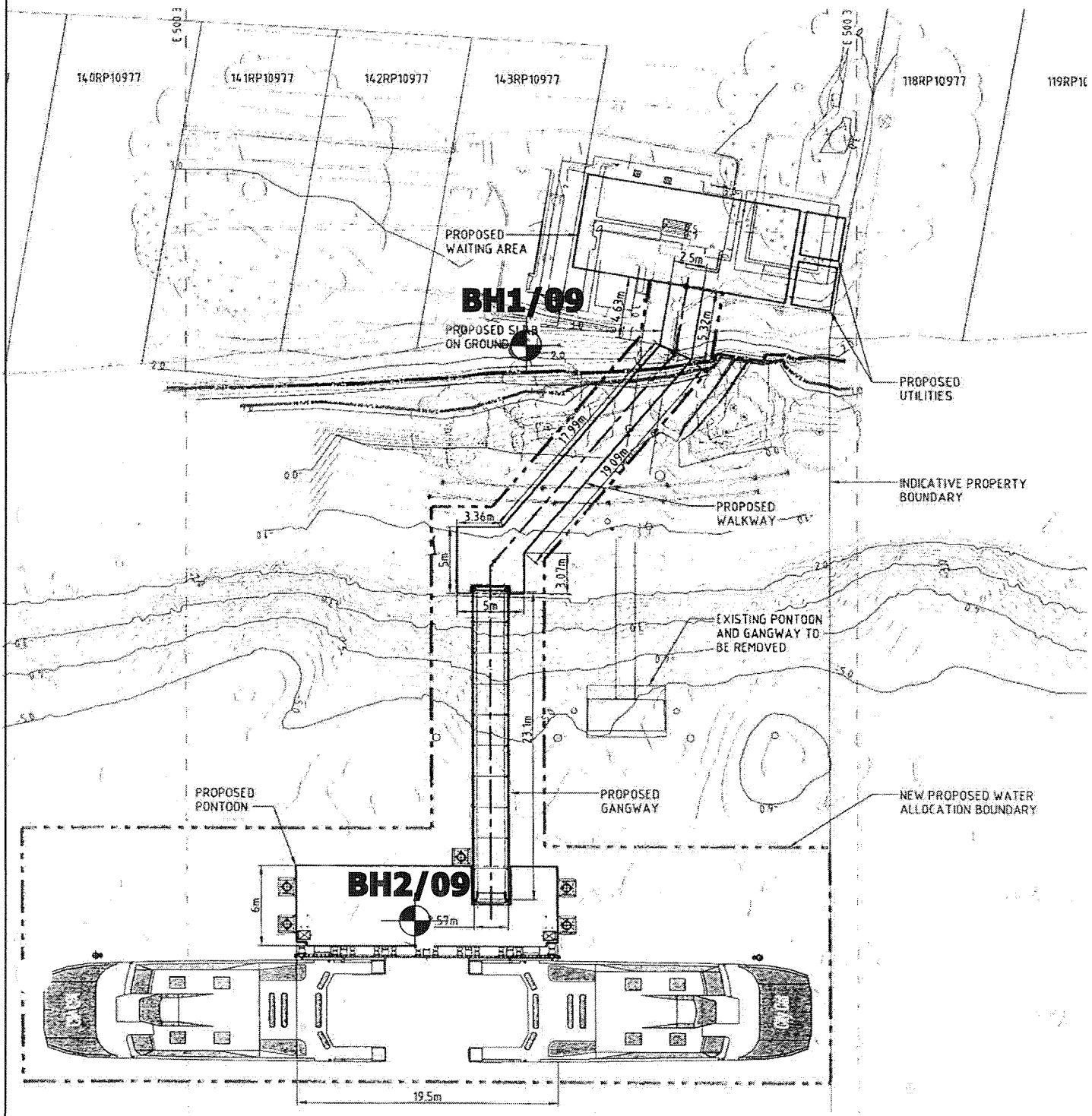

LEGEND

BOREHOLE LOCATION

DIAGRAMMATIC ONLY
DO NOT SCALE

"While every care is taken by Brisbane City Council (BCC) and the Department of Natural Resources and Mines (NRM) to ensure the accuracy of this data supplied by BCC and NRM, BCC and NRM jointly and severally make no representations or warranties about its accuracy, reliability, completeness or suitability for any particular purpose and disclaim all responsibility and all liability (including without limitation, liability in negligence) for all expenses, losses, damages (including indirect or consequential damage) and costs which may be incurred as a result of data being inaccurate or incomplete in any way and for any reason. Based on Data provided with the permission of the Department of Natural

ACKNOWLEDGEMENT
The Consultant agrees to acknowledge the source of the Licensed Data by including on any map and/or report the following words
"Information supplied by Bimap, Brisbane City Council, under copyright".

Design		May 09	CITY DESIGN SURVEY SERVICES WEST END FERRY TERMINAL REPLACEMENT HOOGLEY STREET, WEST END BOREHOLE LOCATIONS	Dedicated to a better Brisbane	BRISBANE CITY COUNCIL City Design The Engineering Group - Ground Engineering
Drawn		May 09			
Checked		May 09		webmap	Report Reference No. CD/T6-G1/090537PR001A
Scale	AS SHOWN	A4			Fig. 1

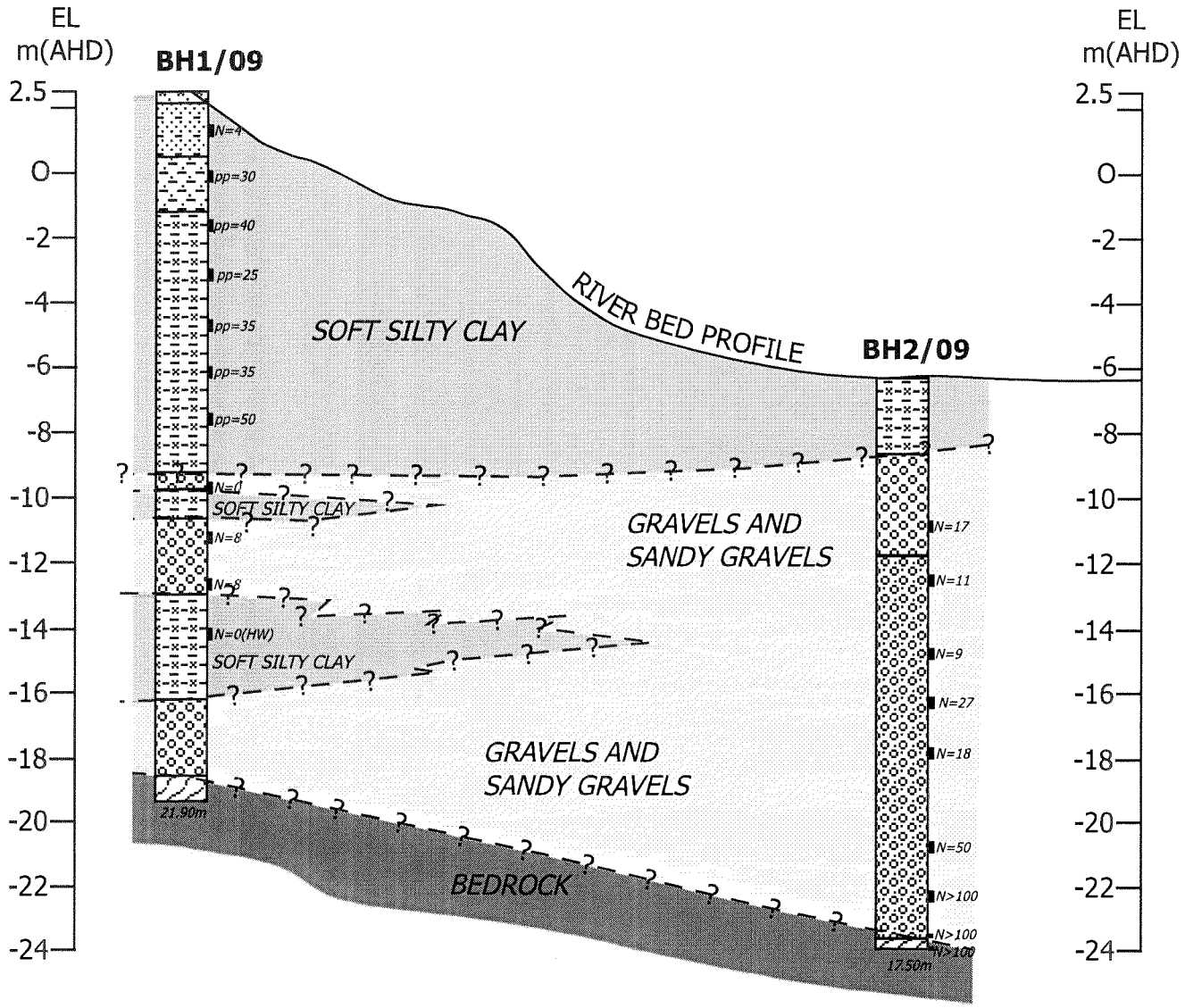

LEGEND

- SILTY CLAY
- SANDY CLAY
- SILTY CLAY
- GRAVEL
- SANDY GRAVEL
- PHYLLITE

N=1 SPT "N" Value

pp=35 "pp" Value

DIAGRAMMATIC ONLY
DO NOT SCALE

"While every care is taken by Brisbane City Council (BCC) and the Department of Natural Resources and Mines (NRM) to ensure the accuracy of this data supplied by BCC and NRM, BCC and NRM jointly and severally make no representations or warranties about its accuracy, reliability, completeness or suitability for any particular purpose and disclaim all responsibility and all liability (including without limitation, liability in negligence) for all expenses, losses, damages (including indirect or consequential damage) and costs which may be incurred as a result of data being inaccurate or incomplete in any way and for any reason.
Based on Data provided with the permission of the Department of Natural
ACKNOWLEDGEMENT
The Consultant agrees to acknowledge the source of the Licensed Data by including on any map and/or report the following words
"Information supplied by Bimap, Brisbane City Council, under copyright".

Design		May 09
Drawn		May 09
Checked		May 09
Scale	AS SHOWN	A4

CITY DESIGN
SURVEY SERVICES
WEST END FERRY TERMINAL REPLACEMENT
HOOGLEY STREET, WEST END
CROSS-SECTION SHOWING BOREHOLE PROFILES

BRISBANE CITY COUNCIL
City Design
The Engineering Group - Ground Engineering

Report Reference No. **CD/T6-G1/090537PR001A**

Fig. **2**

IMPORTANT INFORMATION ABOUT YOUR GEOTECHNICAL ENGINEERING REPORT

As the client of a consulting geotechnical engineer, you should know that site subsurface conditions cause more construction problems than any other factor. ASFE/The Association of Engineering Firms Practicing in the Geosciences offers the following suggestions and observations to help you manage your risks.

A GEOTECHNICAL ENGINEERING REPORT IS BASED ON A UNIQUE SET OF PROJECT-SPECIFIC FACTORS

Your geotechnical engineering report is based on a subsurface exploration plan designed to consider a unique set of project-specific factors. These factors typically include: the general nature of the structure involved, its size, and configuration; the location of the structure on the site; other improvements, such as access roads, parking lots, and underground utilities; and the additional risk created by scope-of-service limitations imposed by the client. To help avoid costly problems, ask your geotechnical engineer to evaluate how factors that change subsequent to the date of the report may affect the report's recommendations.

Unless your geotechnical engineer indicates otherwise, do not use your geotechnical engineering report:

- when the nature of the proposed structure is changed, for example, if an office building will be erected instead of a parking garage, or a refrigerated warehouse will be built instead of an unrefrigerated one;
- when the size, elevation, or configuration of the proposed structure is altered;
- when the location or orientation of the proposed structure is modified;
- when there is a change of ownership; or
- for application to an adjacent site.

Geotechnical engineers cannot accept responsibility for problems that may occur if they are not consulted after factors considered in their report's development have changed.

SUBSURFACE CONDITIONS CAN CHANGE

A geotechnical engineering report is based on conditions that existed at the time of subsurface exploration. Do not base construction decisions on a geotechnical engineering report whose adequacy may have been affected by time. Speak with your geotechnical consultant to learn if additional tests are advisable before construction starts.Note, too, that additional tests may be required when subsurface conditions are affected by construction operations at or adjacent to the site, or by natural events such as floods, earthquakes, or ground water fluctuations. Keep your geotechnical consultant apprised of any such events.

MOST GEOTECHNICAL FINDINGS ARE PROFESSIONAL JUDGMENTS

Site exploration identifies actual subsurface conditions only at those points where samples are taken. The data were extrapolated by your geotechnical engineer who then applied judgment to render an opinion about overall subsurface conditions. The actual interface between materials may be far more gradual or abrupt than your report indicates. Actual conditions in areas not sampled may differ from those predicted in your report. While nothing can be done to prevent such situations, you and your geotechnical engineer can work together to help minimize their impact. Retaining your geotechnical engineer to observe construction can be particularly beneficial in this respect.

A REPORT'S RECOMMENDATIONS CAN ONLY BE PRELIMINARY

The construction recommendations included in your geotechnical engineer's report are preliminary, because they must be based on the assumption that conditions revealed through selective exploratory sampling are indicative of actual conditions throughout a site. Because actual subsurface conditions can be discerned only during earthwork, you should retain your geotechnical engineer to observe actual conditions and to finalize recommendations. Only the geotechnical engineer who prepared the report is fully familiar with the background information needed to determine whether or not the report's recommendations are valid and whether or not the contractor is abiding by applicable recommendations. The geotechnical engineer who developed your report cannot assume responsibility or liability for the adequacy of the report's recommendations if another party is retained to observe construction.

GEOTECHNICAL SERVICES ARE PERFORMED FOR SPECIFIC PURPOSES AND PERSONS

Consulting geotechnical engineers prepare reports to meet the specific needs of specific individuals. A report prepared for a civil engineer may not be adequate for a construction contractor or even another civil engineer. Unless indicated otherwise, your geotechnical engineer prepared your report expressly for you and expressly for purposes you indicated. No one other than you should apply this report for its intended purpose without first conferring with the geotechnical engineer. No party should apply this report for any purpose other than that originally contemplated without first conferring with the geotechnical engineer.

GEOENVIRONMENTAL CONCERNS ARE NOT AT ISSUE

Your geotechnical engineering report is not likely to relate any findings, conclusions, or recommendations

about the potential for hazardous materials existing at the site. The equipment, techniques, and personnel used to perform a geoenvironmental exploration differ substantially from those applied in geotechnical engineering. Contamination can create major risks. If you have no information about the potential for your site being contaminated, you are advised to speak with your geotechnical consultant for information relating to geoenvironmental issues.

A GEOTECHNICAL ENGINEERING REPORT IS SUBJECT TO MISINTERPRETATION

Costly problems can occur when other design professionals develop their plans based on misinterpretations of a geotechnical engineering report. To help avoid misinterpretations, retain your geotechnical engineer to work with other project design professionals who are affected by the geotechnical report. Have your geotechnical engineer explain report implications to design professionals affected by them, and then review those design professionals' plans and specifications to see how they have incorporated geotechnical factors. Although certain other design professionals may be familiar with geotechnical concerns, none knows as much about them as a competent geotechnical engineer.

BORING LOGS SHOULD NOT BE SEPARATED FROM THE REPORT

Geotechnical engineers develop final boring logs based upon their interpretation of the field logs (assembled by site personnel) and laboratory evaluation of field samples. Geotechnical engineers customarily include only final boring logs in their reports. Final boring logs should not under any circumstances be redrawn for inclusion in architectural or other design drawings, because drafters may commit errors or omissions in the transfer process. Although photographic reproduction eliminates this problem, it does nothing to minimize the possibility of contractors misinterpreting the logs during bid preparation. When this occurs, delays, disputes, and unanticipated costs are the all-too-frequent result.

To minimize the likelihood of boring log misinterpretation, give contractors ready access to the complete geotechnical engineering report prepared or authorized for their use. (If access is provided only to the report prepared for you, you should advise contractors of the report's limitations, assuming that a contractor was not one of the specific persons for whom the report was prepared and that developing construction cost estimates was not one of the specific purposes for which it was prepared. In other words, while a contractor may gain important knowledge from a report prepared for another party, the contractor would be well-advised to discuss the report with your geotechnical engineer and to perform the additional or alternative work that the contractor believes may be needed to obtain the data specifically appropriate for construction cost estimating purposes.) Some clients believe that it is unwise or unnecessary to give contractors access to their geotechnical engineering reports because they hold the mistaken impression that simply disclaiming responsibility for the accuracy of subsurface information always insulates them from attendant liability. Providing the best available information to contractors helps prevent costly construction problems. It also helps reduce the adversarial attitudes that can aggravate problems to disproportionate scale.

READ RESPONSIBILITY CLAUSES CLOSELY

Because geotechnical engineering is based extensively on judgment and opinion, it is far less exact than other design disciplines. This situation has resulted in wholly unwarranted claims being lodged against geotechnical engineers. To help prevent this problem, geotechnical engineers have developed a number of clauses for use in their contracts, reports, and other documents. Responsibility clauses are not exculpatory clauses designed to transfer geotechnical engineers' liabilities to other parties. Instead, they are definitive clauses that identify where geotechnical engineers' responsibilities begin and end. Their use helps all parties involved recognize their individual responsibilities and take appropriate action. Some of these definitive clauses are likely to appear in your geotechnical engineering report. Read them closely. Your geotechnical engineer will be pleased to give full and frank answers to any questions.

RELY ON THE GEOTECHNICAL ENGINEER FOR ADDITIONAL ASSISTANCE

Most ASFE-member consulting geotechnical engineering firms are familiar with a variety of techniques and approaches that can be used to help reduce risks for all parties to a construction project, from design through construction. Speak with your geotechnical engineer not only about geotechnical issues, but others as well, to learn about approaches that may be of genuine benefit. You may also wish to obtain certain ASFE publications. Contact a member of ASFE of ASFE for a complimentary directory of ASFE publications.

ASFE PROFESSIONAL FIRMS PRACTICING IN THE GEOSCIENCES
8811 COLESVILLE ROAD/SUITE G106/SILVER SPRING, MD 20910
[redacted]

Copyright 1992 by ASFE, Inc. Unless ASFE grants specific permission to do so, duplication of this document by any means whatsoever is expressly prohibited. Re-use of the wording in this document, in whole or in part, also is expressly prohibited, and may be done only with the express permission of ASFE or for purposes of review or scholarly research.

IIGERO6943.5RP

Reprinted with permission by Geotechnical Services Section, Brisbane City Council, 1996

CITY DESIGN - GROUND ENGINEERING
DESCRIPTION AND CLASSIFICATION OF SOIL AND ROCK

GENERAL

Description and classification of soil and rock are based on definitions and systems outlined in Australian Standard AS1726-1993, Geotechnical Site Investigations. Description of rock fracturing is based on a system set out by the Sydney Group of the Australian Geomechanics Society, 1975.

DESCRIPTION AND CLASSIFICATION OF SOIL

Soils are classified on the basis of predominating grain size, modified by other significant grain size or sizes present (e.g. CLAYEY SAND).

Classification		Particle Size
CLAY		< 0.002mm
SILT		0.002 - 0.06mm
SAND	fine sand	0.06 - 0.2mm
	medium sand	0.2 - 0.6mm
	coarse sand	0.6 - 2.0mm
GRAVEL	fine gravel	2 - 6mm
	medium gravel	6 - 20mm
	coarse gravel	20 - 60mm
COBBLES		60 - 200mm
BOULDERS		> 200mm

COHESIVE SOILS

Cohesive soils are described in terms of consistency, colour and structure with comments on minor constituents or apparent special features. Consistency is based on the shear strength of the soil, and is generally estimated from experience, measured by hand penetrometer or determined by laboratory testing.

Term	Abbreviation	Undrained Shear Strength	Unconfined Compressive Strength
VERY SOFT	VS	< 12kPa	<25kPa
SOFT	S	12 - 25kPa	25-50kPa
FIRM	F	25 - 50kPa	50-100kPa
STIFF	St	50 - 100kPa	100-200kPa
VERY STIFF	VSt	100 - 200kPa	200-400kPa
HARD	H	> 200kPa	>400kPa

NON-COHESIVE SOILS

Non-Cohesive soils are described in terms of relative density, colour, with comments on minor constituents or apparent special features. Relative density or density index is generally based on standard penetration testing (AS1289 Test 6.3.1), or other forms of penetration testing.

Term	Relative Density	Abbreviation
VERY LOOSE	<15%	VL
LOOSE	15 - 35%	L
MEDIUM DENSE	35 - 65%	MD
DENSE	65 - 85%	D
VERY DENSE	>85%	VD

ENGINEERING CLASSIFICATION OF ROCK[1]

ROCK STRENGTH

GENERAL FIELD GUIDE	Is (50)[2] MPa	Code[3]	Abbr.	AS1726 Rock Strength	APPROX.[4] Q_u MPa
Easily remoulded by hand to a material with soil properties.	<0.03	<1	EL	Extremely Low	<0.7
May be crumbled and fragmented by hand	0.03 - 0.1	1 – 2	VL	Very Low	0.7 - 2.4
A piece of core 150mm x 50mm diameter may be broken by hand and easily scored with a knife. Sharp edges of the core may be friable and break during handling. Lumps of rock crumble with light hammer blow.	0.1 - 0.3	2 – 3	L	Low	2.4 - 7
A piece of core 150mm x 50mm diameter may be broken by hand with considerable difficulty but may be scored with a knife. Core may be broken with a light hammer blow.	0.3 - 1	3 – 4	M	Medium	7 - 24
A piece of core 150mm x 50mm diameter cannot be broken by hand, but can be slightly scratched or scored with a knife. Core may be broken with a blow from a hammer.	1 - 3	4 – 5	H	High	24 - 70
A piece of core 150mm x 50mm diameter may be broken with a heavy hammer blow, but cannot be scratched by a knife.	3 - 10	5 – 6	VH	Very High	70 - 240
A piece of core 150mm x 50mm diameter is difficult to break with a hammer and rings when struck.	>10	6 - 7	EH	Extremely High	>240

Notes:

1. Based on AS1726 - 1993 Geotechnical Site Investigations.
2. Point Load Strength Index: ISRM Committee on Laboratory Tests, Document No.1, October 1972.
3. Estimated strengths shown between the lines on the histogram indicate strengths are within the range assigned to the lines eg. the histogram plotted between lines 2 and 3 indicates strengths are within the low strength range (between 0.1 and 0.3Mpa)
4. The approximate unconfined compressive strength (q_u) is based on an assumed ratio to the point load index of 20:1. This ratio may vary widely.

ROCK MATERIAL WEATHERING CLASSIFICATION

DESCRIPTION TERM	ABBR	DEFINITION
Residual Soil	RS	Soil developed on extremely weathered rock; the mass structure and substance fabric are no longer evident; there is a large change in volume but the soil has not been significantly transported.
Extremely Weathered Rock	EW	Rock is weathered to such an extent that it has "soil" properties, ie. it either disintegrates or can be remoulded, in water.
Distinctly Weathered Rock	DW	Rock strength usually changed by weathering. The rock may be highly discoloured, usually by ironstaining. Porosity may be increased by leaching, or may be decreased due to deposition of weathering products in pores.
Slightly Weathered Rock	SW	Rock is slightly discoloured but shows little or no change of strength from fresh rock.
Fresh Rock	Fr	Rock shows no sign of decomposition or staining.
Note: Based on AS1726 - 1993 - Geotechnical Site Investigations		

DESCRIPTION OF DEFECTS IN ROCK OR SOIL

DEFECT TYPE	SURFACE SHAPE	SURFACE CHARACTERISTICS	COATINGS
PT - Parting along bedding or foliation JT - Joint IS - Infill Seam CS - Crushed Seam WS - Weathered Seam SS - Soil Seam SZ - Sheared Zone	Pl - Planar Cv - Curved Un - Undulose Ir - Irregular St - Stepped	Sm - Smooth Ro - Rough Sl - Slickensided Sr - Striated Po - Polished	Ic - limonite coated cc - clay coated mc - manganese coated

CODE	DEFECT SPACING (mm)
1	30
2	100
3	300
4	1000
5	3000

Note: Defect spacings shown between the lines on the histogram indicate spacings are within the range assigned to the lines eg. the histogram plotted between lines 2 and 3 indicates defect spacings are within the range of 100mm to 300mm for the length of core indicated.

NOTES AND ABBREVIATIONS USED ON LOGS

DRILLING METHOD	
HA	Hand Auger
A	Continuous Flight Augering
HO	Hollow Auger
R	Rotary Drilling with flushing of cuttings from hole using water circulation.
RA	Rotary Drilling with flushing of cuttings from hole using air circulation.
NC	NMLC 52mm Triple Tube Core Drilling.
NQ	NQ 47mm Triple Tube Core Drilling.
V	V - Bit
TC	Tungsten Carbide Bit
DB	Drag Bit
RB	Roller Bit
MOISTURE CONDITION	
D	Dry : looks and feels dry
M	Moist: no free water on hands when remoulding
W	Wet : free water collects on hands when remoulding
FIELD SAMPLING AND TESTING	
Recovered	Recovered soil sample or length of recovered rock core.
Lost	Lost soil sample or length of lost rock core.
SPT	Standard Penetration Test to AS 1289 6.3.1 - 1993. N = penetration resistance (blows for 300mm penetration following 150mm seating drive). Result reported according to penetration (P) achieved: !P = 450mm blows : for each 150mm of penetration, and N Value !150<P<450 blows : for seating drive, plus subsequent blows and penetration. !P<150mm : total blows and penetration
RW	Rod weight only caused full penetration
HW	Hammer and rod weight only caused full penetration
HB	Hammer bouncing
U5O	Thin wall tube sample (50mm dia.) advanced by hydraulic pressure from drill rig. ! number indicates nominal sample diameter in mm. ! R indicates refusal to penetration
UP50	Piston sample (50mm dia. tube as above)
MV	Mini Pilcon vane shear test (approximate undrained shear strength in kPa)
FV	Field vane shear test (approximate undrained shear strength in kPa)
PP	Pocket penetrometer test (approximate unconfined compressive strength in kPa)
OTHER	
GROUNDWATER:	
GWO	Groundwater level first observed while drilling
GWL	Observed Groundwater level at time and date shown
GROUNDWATER NOT OBSERVED	The observation of groundwater, whether present or not, was not possible due to drilling water, surface seepage, rain, etc, or caving of borehole or test pit
GROUNDWATER NOT ENCOUNTERED	Borehole or test pit dry after drilling, but groundwater could still be present in impermeable soil or where borehole or test pit was backfilled soon after completion.

CITY DESIGN
Ground Engineering
505 St Paul's Tce, Fortitude Valley Qld 4006
Phone [redacted]
Dedicated to a better Bri...

BOREHOLE LOG environmental BH1/09

PROJECT No: CD/T6-G1/090537PR001A

CLIENT: Survey Services	**CONTRACTOR:** Schneider Drilling	**LOGGED BY:** GB
PROJECT: West End Ferry Terminal	**EQUIPMENT:** Gemco HC10	**CHECKED BY:** GB
LOCATION: West End	**NOTES:**	

DATE COMMENCED: 16/02/2009	**ELEVATION (m):** 2.50 **AHD**	**EASTING:**	**MGA**	**HOLE ANGLE:** 90°
COMPLETED: 16/02/2009	**TOTAL DEPTH (m):** 21.90	**NORTHING:**		**BEARING:** ---

DRILLING			LITHOLOGY						SAMPLING/TESTING			ADDITIONAL COMMENTS/ INTERPRETED GEOLOGY
Method	Support	Groundwater	Elevation	Depth (m)	Graphic Log	Material Description	Moisture Content	Consistency/ Rel. Density	Recovery	Samples Test Results Remarks	Depth (m)	
Solid Auger - TC Bit	No Support		2	0		(SM) SILTY SAND, fine to medium grained, grey	M	L			0	ALLUVIUM
			1	1		(SC) CLAYEY SAND, fine to medium grained, brown, 15-30% medium plasticity clay		L-MD			1	
										SPT 2, 2, 2 N=4 (1 - 1.45)		
			0	2							2	
						(Cl) SANDY CLAY, medium plasticity, brown, 15-25% fine grained sand		S-F				
			-1	3						PP=30kPa (2.5 - 2.95)	3	
						(Cl) SILTY CLAY, medium plasticity, grey, trace fine grained sand		VS				
			-2	4						PP=40kPa (4 - 4.5)	4	
				5							5	
			-3							PP=25kPa (5.5 - 5.95)		
			-4	6							6	
				7						PP=35kPa (7 - 7.45)	7	
			-5									
				8							8	
			-6							PP=35kPa (8.5 - 8.95)		
				9							9	
			-7									
				10				S-F		PP=50kPa (10 - 10.4)	10	
			-8									
				11							11	

SOIL LOG - ENVIRONMENTAL 090537PR001A(LOG).GPJ CITY DESIGN DATA TEMPLATE.GDT 15/5/09

NOTE:
LOG TO BE READ IN CONJUNCTION WITH REPORT TEXT AND EXPLANATION SHEETS

Soil Description and Classification Symbols based on AS 1726

Water Symbols
- Water Level (date)
- Inflow
- Partial Loss
- Complete Loss

Moisture Content
- D - Dry
- M - Moist
- W - Wet
- W_p - Plastic Limit
- W_l - Liquid Limit

Consistancy (cohesive soils)
- VS - Very Soft
- S - Soft
- F - Firm
- St - Stiff
- VSt - Very Stiff
- H - Hard

Relative Density (cohesionless soils)
- VL - Very Loose
- L - Loose
- MD - Medium Dense
- D - Dense
- VD - Very Dense

Sampling/Testing
- Bs - Bulk Sample
- Dist - Disturbed Sample
- SPT - Standard Penetration test
- SS - Split Spoon
- N - SPT 'N' Value
- PP - Pocket Penetrometer
- VS - Vane Shear
- U_{50} - Undisturbed Sample/Diameter

CITY DESIGN

Ground Engineering
505 St Paul's Tce, Fortitude Valley Qld 4006
[redacted]
Dedicated to a b[redacted]

BOREHOLE LOG BH1/09

environmental

PROJECT No: CD/T6-G1/090537PR001A

CLIENT: Survey Services	**CONTRACTOR:** Schneider Drilling	**LOGGED BY:** GB
PROJECT: West End Ferry Terminal	**EQUIPMENT:** Gemco HC10	**CHECKED BY:** GB
LOCATION: West End	**NOTES:**	

DATE COMMENCED: 16/02/2009	**ELEVATION (m):** 2.50	**AHD**	**EASTING:**	**MGA**	**HOLE ANGLE:** 90°
COMPLETED: 16/02/2009	**TOTAL DEPTH (m):** 21.90		**NORTHING:**		**BEARING:** ---

DRILLING			LITHOLOGY						SAMPLING/TESTING			ADDITIONAL COMMENTS/ INTERPRETED GEOLOGY
Method	Support	Groundwater	Elevation	Depth (m)	Graphic Log	Material Description	Moisture Content	Consistency/ Rel. Density	Recovery	Samples Test Results Remarks	Depth (m)	
Solid Auger - TC Bit	No Support		-9	12		(Cl) SILTY CLAY, medium plasticity, grey, trace fine grained sand *(continued)*	M					RESIDUAL SOIL
						(GW) GRAVEL, medium grained, brown, trace sand	W			U_{50}(11.5 - 11.95)	12	
			-10	13		(Cl) SILTY CLAY, low to medium plasticity, dark grey, some fine grained sand	M	S-F		SPT 3, 0, 0 N=0 (12 - 12.45)	13	
			-11	14		(GP) GRAVEL, fine to medium grained, brown, trace fine grained sand		L-MD		SPT 3, 3, 5 N=8 (13.5 - 13.95)	14	
			-12	15						SPT 3, 3, 5 N=8 (15 - 15.45)	15	
			-13	16		(Cl) SILTY CLAY, medium plasticity, dark grey		F-St			16	
			-14	17						SPT HW (16.5 - 16.95)	17	
			-15	18							18	
			-16	19		(GW) GRAVEL, fine to medium grained, brown, some clay		VD			19	
			-17	20							20	
			-18	21							21	
			-19	22		(Cl) SILTY CLAY, low to medium plasticity, mottled green-grey and brown		VSt			22	RESIDUAL SOIL
						(GM) SILTY GRAVEL, fine to medium grained, mottled green-grey and brown		VD				EXTREMELY WEATHERED PHYLLITE

Bottom of hole at 21.90 m.

NOTE:

LOG TO BE READ IN CONJUNCTION WITH REPORT TEXT AND EXPLANATION SHEETS

Soil Description and Classification Symbols based on AS 1726

Water Symbols

- Water Level (date)
- Inflow
- Partial Loss
- Complete Loss

Moisture Content

- D - Dry
- M - Moist
- W - Wet
- W_p - Plastic Limit
- W_l - Liquid Limit

Consistancy (cohesive soils)

- VS - Very Soft
- S - Soft
- F - Firm
- St - Stiff
- VSt - Very Stiff
- H - Hard

Relative Density (cohesionless soils)

- VL - Very Loose
- L - Loose
- MD - Medium Dense
- D - Dense
- VD - Very Dense

Sampling/Testing

- Bs - Bulk Sample
- Dist - Disturbed Sample
- SPT - Standard Penetration test
- SS - Split Spoon
- N - SPT 'N' Value
- PP - Pocket Penetrometer
- VS - Vane Shear
- U_{50} - Undisturbed Sample/Diameter

SOIL LOG - ENVIRONMENTAL 090537PR001A(LOG).GPJ CITY DESIGN DATA TEMPLATE.GDT 15/5/09

CITY DESIGN

Ground Engineering
505 St Paul's Tce, Fortitude Valley Qld 4006
[redacted]

Dedicated to a better Brisbane

BOREHOLE LOG environmental BH2/09

PROJECT No: CD/T6-G1/090537PR001A

CLIENT: Survey Services	**CONTRACTOR:** Schneider Drilling	**LOGGED BY:** TW
PROJECT: West End Ferry Terminal	**EQUIPMENT:** Hydrapower Scout	**CHECKED BY:** GB
LOCATION: West End	**NOTES:**	

DATE COMMENCED: 6/04/2009	**ELEVATION (m):** -6.20 **AHD**	**EASTING:** 50312.88 **MGA**	**HOLE ANGLE:** 90°
COMPLETED: 6/04/2009	**TOTAL DEPTH (m):** 17.50	**NORTHING:** 156460.07	**BEARING:** ---

DRILLING			LITHOLOGY						SAMPLING/TESTING			ADDITIONAL COMMENTS/ INTERPRETED GEOLOGY
Method	Support	Groundwater	Elevation	Depth (m)	Graphic Log	Material Description	Moisture Content	Consistency/ Rel. Density	Recovery	Samples Test Results Remarks	Depth (m)	
Solid Auger - TC Bit	No Support	▽	-7	1		(Cl) SILTY CLAY, medium plasticity, dark grey	W	VS			1	ALLUVIUM
			-8	2							2	
			-9	3		(GP) GRAVEL, fine to medium grained, grey, some fine grained sand		L-MD			3	
			-10	4				MD			4	
			-11	5						SPT 7, 9, 8 N=17 (4.4 - 4.85)	5	
			-12	6		(GW) SANDY GRAVEL, fine to medium grained, grey, fine to medium grained sand		MD		SPT 5, 5, 6 N=11 (5.9 - 5.95)	6	
			-13	7							7	
			-14	8		fine grained gravel, medium to coarse grained sand					8	
			-15	9						SPT 4, 4, 5 N=9 (8.4 - 8.85)	9	
			-16	10						SPT 9, 13, 14 N=27 (9.9 - 10.35)	10	
			-17	11							11	

NOTE:

LOG TO BE READ IN CONJUNCTION WITH REPORT TEXT AND EXPLANATION SHEETS

Soil Description and Classification Symbols based on AS 1726

Water Symbols

- Water Level (date)
- Inflow
- Partial Loss
- Complete Loss

Moisture Content

- D - Dry
- M - Moist
- W - Wet
- W_p - Plastic Limit
- W_l - Liquid Limit

Consistancy (cohesive soils)

- VS - Very Soft
- S - Soft
- F - Firm
- St - Stiff
- VSt - Very Stiff
- H - Hard

Relative Density (cohesionless soils)

- VL - Very Loose
- L - Loose
- MD - Medium Dense
- D - Dense
- VD - Very Dense

Sampling/Testing

- Bs - Bulk Sample
- Dist - Disturbed Sample
- SPT - Standard Penetration test
- SS - Split Spoon
- N - SPT 'N' Value
- PP - Pocket Penetrometer
- VS - Vane Shear
- U_{50} - Undisturbed Sample/Diameter

SOIL LOG - ENVIRONMENTAL 090537PR001A(BH2).GPJ CITY DESIGN DATA TEMPLATE.GDT 15/5/09

CITY DESIGN

Ground Engineering
505 St Paul's Tce, Fortitude Valley Qld 4006
Dedicated to a [redacted]

BOREHOLE LOG environmental BH2/09

PROJECT No: CD/T6-G1/090537PR001A

CLIENT: Survey Services	**CONTRACTOR:** Schneider Drilling	**LOGGED BY:** TW
PROJECT: West End Ferry Terminal	**EQUIPMENT:** Hydrapower Scout	**CHECKED BY:** GB
LOCATION: West End	**NOTES:**	

DATE COMMENCED: 6/04/2009	**ELEVATION (m):** -6.20 **AHD**	**EASTING:** 50312.88 **MGA**	**HOLE ANGLE:** 90°
COMPLETED: 6/04/2009	**TOTAL DEPTH (m):** 17.50	**NORTHING:** 156460.07	**BEARING:** ---

DRILLING			LITHOLOGY						SAMPLING/TESTING			ADDITIONAL COMMENTS/ INTERPRETED GEOLOGY
Method	Support	Groundwater	Elevation	Depth (m)	Graphic Log	Material Description	Moisture Content	Consistency/ Rel. Density	Recovery	Samples Test Results Remarks	Depth (m)	
Solid Auger - TC Bit	No Support		-18	12		fine grained gravel, medium to coarse grained sand *(continued)*	W			SPT 6, 7, 11 N=18 (11.6 - 12.05)	12	ALLUVIUM
			-19	13							13	
			-20	14		fine to medium grained gravel		D			14	
			-21	15						SPT 20, 23, 26 N=49 (14.4 - 14.85)	15	
			-22	16				VD		SPT 30/100mm(HB) (15.9 - 16)	16	
			-23	17						SPT 18, 30/90mm(HB) (17.1 - 17.34)	17	
			-24	18		(GM) SILTY GRAVEL, fine grained, dark grey				SPT 25/50mm(HB) (17.5 - 17.55)	18	~~SLIGHTLY~~ WEATHERED PHYLLITE
			-25	19		Bottom of hole at 17.50 m.					19	
			-26	20							20	
			-27	21							21	
			-28	22							22	

SOIL LOG - ENVIRONMENTAL 090537PR001A(BH2).GPJ CITY DESIGN DATA TEMPLATE.GDT 15/5/09

NOTE:
LOG TO BE READ IN CONJUNCTION WITH REPORT TEXT AND EXPLANATION SHEETS

Soil Description and Classification Symbols based on AS 1726

Water Symbols
- Water Level (date)
- Inflow
- Partial Loss
- Complete Loss

Moisture Content
- D - Dry
- M - Moist
- W - Wet
- W_p - Plastic Limit
- W_l - Liquid Limit

Consistancy (cohesive soils)
- VS - Very Soft
- S - Soft
- F - Firm
- St - Stiff
- VSt - Very Stiff
- H - Hard

Relative Density (cohesionless soils)
- VL - Very Loose
- L - Loose
- MD - Medium Dense
- D - Dense
- VD - Very Dense

Sampling/Testing
- Bs - Bulk Sample
- Dist - Disturbed Sample
- SPT - Standard Penetration test
- SS - Split Spoon
- N - SPT 'N' Value
- PP - Pocket Penetrometer
- VS - Vane Shear
- U_{50} - Undisturbed Sample/Diameter

"ASH-07"

CLIENTS | PEOPLE | PERFORMANCE

Brisbane City Council

Report for West End CityCat Terminal

Interim DFE Capability Check

May 2011

INFRASTRUCTURE | MINING & INDUSTRY | DEFENCE | PROPERTY & BUILDINGS | ENVIRONMENT

This West End CityCat Terminal – Interim DFE Capability Check ("Report"):

1. *has been prepared by GHD Pty Ltd ("GHD") for Brisbane City Council;*
2. *may only be used and relied on by Brisbane City Council;*
3. *must not be copied to, used by, or relied on by any person other than [insert name of client] without the prior written consent of GHD;*
4. *may only be used for the purpose of structural review (and must not be used for any other purpose).*

GHD and its servants, employees and officers otherwise expressly disclaim responsibility to any person other than [insert name of client] *arising from or in connection with this Report.*

To the maximum extent permitted by law, all implied warranties and conditions in relation to the services provided by GHD and the Report are excluded unless they are expressly stated to apply in this Report.

The services undertaken by GHD in connection with preparing this Report:

- *were limited to those specifically detailed in GHD proposal letter dated 27 April 2011.*

The opinions, conclusions and any recommendations in this Report are based on assumptions made by GHD when undertaking services and preparing the Report ("Assumptions"), including (but not limited to):

- *maximum flood levels at +7.4m AHD have been adopted;*
- *a flood velocity of 5m/s (10 knots) has been used. This velocity is the observed velocity during the 2011 January floods.*

GHD expressly disclaims responsibility for any error in, or omission from, this Report arising from or in connection with any of the Assumptions being incorrect.

Subject to the paragraphs in this section of the Report, the opinions, conclusions and any recommendations in this Report are based on conditions encountered and information reviewed at the time of preparation and may be relied on until [insert a "sunset" timeframe, e.g. 3 or 6 months], after which time, GHD expressly disclaims responsibility for any error in, or omission from, this Report arising from or in connection with those opinions, conclusions and any recommendations.

Contents

1. Introduction 1

2. Scope and Methodology 2

   2.1 Scope 2

   2.2 Methodology 2

3. Information Received 4

4. Flood Flow Velocity 5

5. Capacity of Pile / Pontoon System 7

6. Impact from Large Debris 14

7. Montages 15

Table Index

Table 1	Soil parameters	8
Table 2	Tubular Pile Results	10
Table 3	Geotechnical Results	10
Table 4	Rear Pile Guide Bracket – Lateral Impact on Main Members	12
Table 5	Rear Pile Guide Bracket - Lateral Impact on Diagonal Members	12
Table 6	Upstream Pile Guide Bracket – Frontal Impact on Main Members	13
Table 7	Upstream Pile Guide Bracket – Frontal Impact on Diagonal Members	13

Figure Index

Figure 1	Brisbane River Cross Section – West End	5
Figure 2	Pontoon and Piles – Structural Model	9

Appendices

A Structural Calculations

B Montages

1. Introduction

Brisbane City Council (BCC) has commissioned the construction of a new CityCat terminal for West End and construction of the new terminal is currently underway. In January 2011 a large flood affected the Brisbane River resulting in flood levels at the West End site well in excess of the design Q100 flood levels. In addition the flood flow velocities were observed to be of the order of 5m/s which was also well in excess of the design flood velocity of 2m/s.

The January 2011 flood in the Brisbane River caused extensive damage to the existing CityCat terminal network, with the damage being caused by the very high water levels (particularly upstream of the city), high current loads resulting in pile failures, and high impact loads from large items of debris resulting in pile failures and the subsequent loss of pontoons and gangways. In addition a number of CityCat pontoons sank as a result of flooding through the deck hatches brought about by the loss of freeboard on the pontoon possibly caused by negative lift from the very high current velocities.

GHD were commissioned by BCC assess the capacity of the new West End terminal under similar flood conditions to the January 2011 flood, and to identify what (if any) changes need to be made to the original design to ensure the security of the main components of the terminal during this event.

2. Scope and Methodology

2.1 Scope

The scope of the work was defined in the GHD proposal dated April 2011 and is summarised as follows:

The scope of services involves a review of the flood design immunity of the existing design for a new CityCat terminal at West End under January 2011 flood conditions

The object of the exercise is to identify what (if any) changes need to be made to the original design to ensure the security of the main components of the terminal during a January 2011 type flood taking the following into account:

- Terminal will not be operational under these conditions so operational and berthing loads are not a factor.
- The focus of the investigation is the integrity of the piles and pontoon and associated connecting members.

2.2 Methodology

The methodology used to review of the current design is as follows:

- Provision of revised flood flow velocity estimate to support the analysis:

  For West End, there is insufficient bathymetric survey data to develop a 2D model for this site. Therefore, basic desktop calculations using the detailed bathymetry in the vicinity of the new terminal coupled with available historical (1974) bathymetry of the river cross section at this location, and a nominated flood flow, will be used to estimate the average flood flow velocity. The results will be discussed with BCC and an agreed flood flow velocity will be established for this site taking into account the limited information on observed flow velocities during the flood.
- Calculate the capacity of the terminal as a whole under the increased flood conditions through an examination of the critical elements:
  1. Pile strength in terms of both structural and geotechnical capacity;
  2. Strength of connections between the piles and the pontoon; and
  3. Comment on capacity to resist impact loads from a nominal sized debris e.g. pontoon, as defined by BCC.
- Identify any components that are overstressed or approaching their ultimate capacity and comment on options to reduce the risk of failure.
- Calculations to check the capacity of an 800mm diameter steel pile against impact loading from the nominal sized debris moving at the agreed flood velocity.
- Prepare a montage (2 views) of the West End terminal showing a row of 800mm diameter piles at 4m spacing extending out from the shoreline upstream of the proposed terminal, to provide protection from debris during a flood.

- Present the results in a written report

3. Information Received

The following information was received from BCC for use in the required calculations and assessments:

1. Detailed bathymetry in vicinity of the West End CityCat terminal dated 25 November 2008.
2. Complete set of drawings for West End Ferry Terminal Replacement, KBR, December 2009.
3. West End Ferry Terminal Upgrade Geotechnical Investigation, BCC, May 2009.
4. Montage model of the proposed terminal upgrade from Cox Rainer.
5. Pile driving records for piles P1 to P17 inclusive for the West End Terminal Upgrade structures.
6. Pile test results for piles P16 and P17.
7. GIS information for the area in the vicinity of the West End terminal.

The following information was sourced from Maritime Safety Queensland, Marine Survey section:

8. Hydrographic survey of the Brisbane River, Toowong and St Lucia Reaches, Drawing No R321-2A, 7 May 1974.

4. Flood Flow Velocity

The information available to determine the average flood flow velocity comprised:

1. Bathymetry in the vicinity of the proposed terminal from 2008 from BCC
2. Historical bathymetry of the river dated 1974 from the Department of Harbours and Marine (H&M)
3. A nominated flood flow of 6,000m^3 from BCC

From the available bathymetry a cross section of the river in the vicinity of the terminal was constructed and is shown in **Figure 1**. It is noted that the recent bathymetry on the left bank is consistent with the historical information for the rest of the cross section.

Figure 1 Brisbane River Cross Section – West End

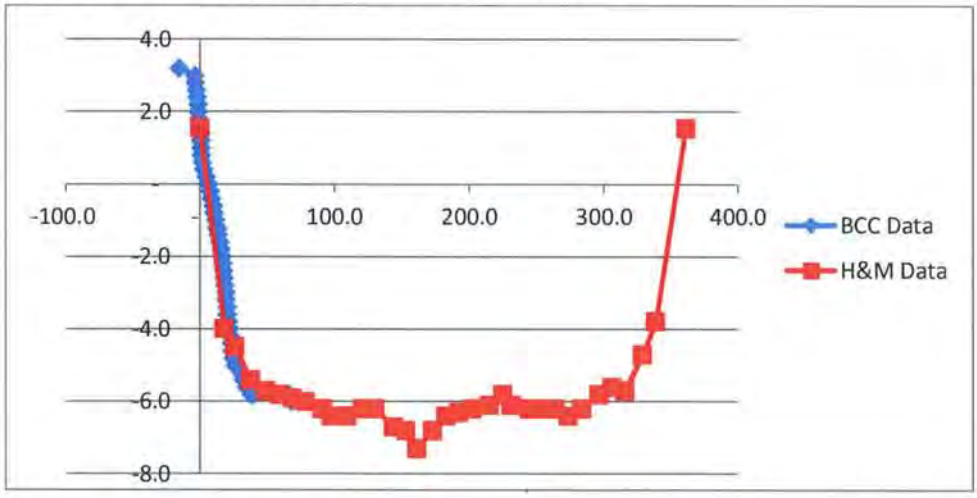

Applying a flow rate of 6,000m^3 to the above cross section yields an average velocity of 1.3m/s using a water level of 7.4m AHD and assuming that all the flow is contained in the channel.

To obtain an estimate of the maximum velocity in the middle of the channel, the average velocity is divided by factors to account for the logarithmic velocity profile in both the vertical and horizontal planes. Applying a factor of 0.8 in both directions gives a maximum velocity of:

$V_{max} = V_{av} / 0.8 / 0.8 = 2.02$m/s

The observed surface velocity at the height of the flood was 20km/hr from an observer on the shore and 10 knots from reports from boats on the water. These observations are remarkable consistent being 5.6m/s and 5.2m/s respectively. However, they are more than twice the maximum velocity calculated from the average velocity above.

It is concluded that it is not possible to apply a simply calculation to determine the value of the maximum flood flow current in this instance and for the purposes of

assessing the capacity of the proposed pile / pontoon system at West End, the observed velocity should be used, rounded to a whole number given the accuracy of the observation.

On this basis, the maximum flood flow velocity thus adopted for the purposes of terminal capacity is 5m/s.

5. Capacity of Pile / Pontoon System

The key components of the pile / pontoon system are:

1. 5 no f800 x 25 thick tubular steel piles;
2. Pile guide brackets (steel); and
3. Steel pontoon.

5.1 Parameters and assumptions

The structural analysis of the system has been carried out based on the following parameters and assumptions:

5.1.1 Key Levels

Key levels used in the analysis used in the design check have been based on AHD and are as follows:

Maximum Flood Level	7.4 m
Mean High Water Springs (MHWS)	0.98 m
River Bed Level	-6.0 m
Pile Toe Level	-18 m

5.1.2 Soil Parameters

The geotechnical parameters used in this review are based on the West End Ferry Terminal Upgrade Geotechnical Investigation report and boreholes BH1/09 and BH2/09. The geotechnical parameters used to calculate equivalent soil springs are as shown in Table 1.

Table 1 Soil parameters

	Clay (RI -6 to RI-9)	Gravel (RI -9 to RI-13)	Clay (RI -13 to RI-15)	Sandy Gravel (RI -15 to RI-24)
Submerged density	18 kN/m^3	19 kN/m^3	18 kN/m^3	19 kN/m3
Friction angle (ϕ)	26°	35°	26°	5°
Cohesion (cu)	25 kPa	0	50 kPa	0
Modulus	6 MPa	10 MPa	12 MPa	25 MPa

5.1.3 Loading due to Flood Currents

The following assumptions have been used to calculate the loading on piles due to flood currents:

- 100mm thick marine growth on piles has been assumed to exist between MHWS and the river bed and a drag coefficient of C_D of 1.4 has been assumed for the piles in accordance to AS3962;
- A maximum water velocity at the surface of 5m/s has been adopted. An assumed triangular distribution for velocity profile has been assumed for simplicity (and for added conservatism);
- A debris mat thickness of twice the pontoon draft has been adopted in accordance with AS3962; and
- An additional debris impact load of a 2 ton log stopping at 300mm has been assumed.

5.2 Structural Analysis Approach

The structural software used in the analysis is SAP2000 V14. This program is a 3D frame analysis and design tool appropriate for this project.

The structural analysis included the compilation of a representative geotechnical model for free standing piles to determine appropriate spring stiffness parameters (and associated capped reaction) to be adopted in the structural model.

The spring values used in the structural model were achieved through an iterative process in which the structural response was calibrated with the geotechnical model until adequate convergence was achieved. Sensitivity checks on spring values were carried out to assess the risk of uncertainty.

The analysis' sequence is as summarised below:

- Geotech data review and determination of the soil input properties;
- Preparation of geotech model and initial analysis for spring stiffness values;
- Preparation of structural model with initial spring values and analysis;
- Derivation of the structural results (bending moment, shear, deflection);
- Rerun geotechnical analysis using structural results;
- Run sensitivity checks to achieve convergence between the two models;
- Run the structural analysis for all load cases and summarise the analysis results of the design forces and moments; and
- Design capacity checks.

The pontoon and pile model is as shown in **Figure 2** below.

Figure 2 Pontoon and Piles – Structural Model

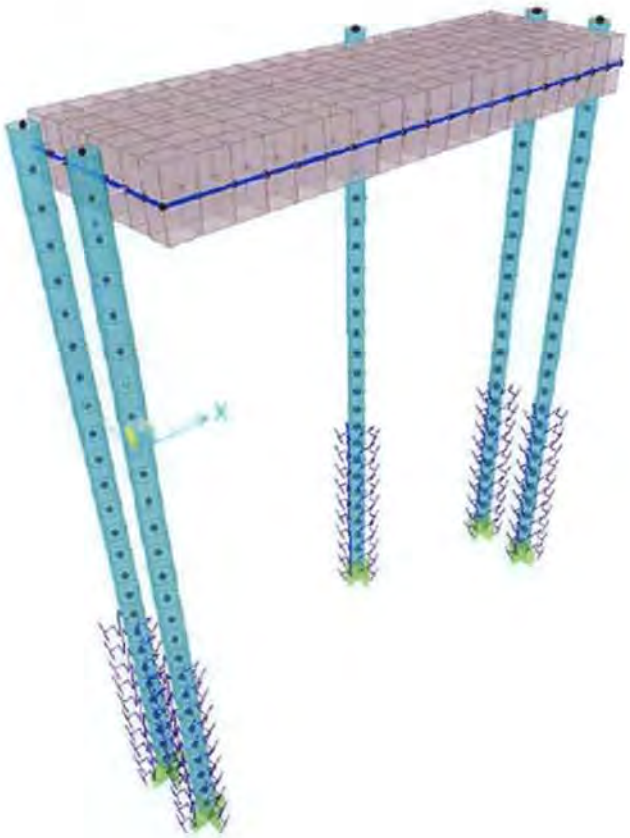

5.3 Results

5.3.1 Tubular Piles

Pile actions have been estimated from the SAP2000 structural model whilst the capacities of the piles have been calculated in accordance with AS4100. The results are shown in **Table 2**.

Table 2 Tubular Pile Results

Capacity	Design Actions (R*)	Section Capacity (ϕR)		Member Capacity (ϕR)	
Axial Compression	150 kN	19174 kN	0.78%	4,525 kN	3.31%
Axial Tension	0 kN	19174 kN	0%	-	-
Bending Moment Capacity Principal Axis	1960 kNm	4691 kNm	41.8%	4691 kNm	41.8%
Bending Moment Capacity Secondary Axis	350 kNm	4691 kNm	7.46%	4691 kNm	7.46%
Shear	460 kN	6902 kN	6.66%	6902 kN	6.66%

It is noted that the tubular piles are within their design capacities for all cases including extreme current loading, debris mat and debris impact.

5.3.2 Geotechnical Results

The geotechnical results are shown in **Table 3**:

Table 3 Geotechnical Results

Soil Level (RL m AHD)	Pile Spring – Capped Reaction (kN) (R)	Design Actions (kN) (R*)	Check
-7	79	80	NOT OK
-8	118	106.35	OK
-9	157	31.8	OK
-10	297	50.98	OK
-11	378	4.36	OK
-12	460	22.68	OK
-13	541	47.07	OK

-14	360	25.74	OK
-15	360	33.65	OK
-16	767	115.9	OK
-17	849	51.14	OK
-18	849	0.64	OK

The capped soil reactions have been calculated as limiting force per metre length of pile. The model results show that at RL -7 the pile spring capped value is exceeded by the applied loading on the piles. The model results suggest that the first 2 metres of soil (from RL -6 to RL-8) undergo some plastic deformation (yield) as a result of current, debris and debris impact loading.

As the flood levels recede and current velocities reduce, the pile will tend to spring back to its original vertical position as the deflection of the pile itself was within its elastic range. However, it is likely that material in the river bed will fill in the area upstream of the pile as it bends downstream thus preventing the pile returning to its original upright position, although it may straighten up to some extent. Therefore the most likely outcome post flood is that the restraining piles holding the pontoon in place will remain slanted in a downstream direction and, while they will continue to keep the pontoon in position, the pontoon may not be able to slide freely up and down with the tide, leading to other damage to the pile guide brackets and possible sinking of the pontoon or jamming of the pontoon in one position.

5.3.3 Pile Guide Brackets

A structural model of the guide brackets was setup in SAP2000 to check for sections capacity under the worst conditions. The impact conditions adopted were the following:

- Impact velocity: 5 m/s
- Impact Mass: 2 ton log
- Impact stopping distance: 300mm.

The capacity of the guide bracket was checked for direct impact loading. The model and tabulated results are shown in **Table 4**, **Table 5**, **Table 6**, and **Table 7**

Table 4 Rear Pile Guide Bracket – Lateral Impact on Main Members

Design Actions		Section Capacity		Check
N*	74 kN	ϕN_{cx}	1019 kN	Ok
		ϕN_{cy}	1019 kN	Ok
T*	0 kN	ϕN_t	1049 kN	Ok
V_x*	95 kN	ϕV_x	309 kN	Ok
V_y*	0 kN	ϕV_v	309 kN	Ok
M_x*	69 kNm	ϕM_{sx}	55.1 kNm	Not Ok
		ϕM_{bx}	55.1 kNm	Not Ok
M_y*	0.25 kNm	ϕM_{sy}	55.1 kNm	Ok
		ϕM_{bx}	55.1 kNm	Ok

Table 5 Rear Pile Guide Bracket - Lateral Impact on Diagonal Members

Design Actions		Section Capacity		Check
N*	17 kN	ϕN_{cx}	671 kN	Ok
		ϕN_{cy}	671 kN	Ok
T*	0 kN	ϕN_t	671 kN	Ok
V_x*	126 kN	ϕV_x	197 kN	Ok
V_y*	0 kN	ϕV_v	197 kN	Ok
M_x*	0 kNm	ϕM_{sx}	23.2 kNm	Ok
		ϕM_{bx}	23.2 kNm	Ok
M_y*	61 kNm	ϕM_{sy}	23.2 kNm	Not Ok
		ϕM_{bx}	23.2 kNm	Not Ok

Table 6 Upstream Pile Guide Bracket – Frontal Impact on Main Members

Design Actions		Section Capacity		Check
N^*	18 kN	ϕN_{cx}	1019 kN	Ok
		ϕN_{cy}	1019 kN	Ok
T^*	0 kN	ϕN_t	1049 kN	Ok
V_x^*	0 kN	ϕV_x	309 kN	Ok
V_y^*	0 kN	ϕV_v	309 kN	Ok
M_x^*	48.7 kNm	ϕM_{sx}	55.1 kNm	Ok
		ϕM_{bx}	55.1 kNm	Ok
M_y^*	0.25 kNm	ϕM_{sy}	55.1 kNm	Ok
		ϕM_{bx}	55.1 kNm	Ok

Table 7 Upstream Pile Guide Bracket – Frontal Impact on Diagonal Members

Design Actions		Section Capacity		Check
N^*	57.1 kN	ϕN_{cx}	671 kN	Ok
		ϕN_{cy}	671 kN	Ok
T^*	0 kN	ϕN_t	671 kN	Ok
V_x^*	0.3 kN	ϕV_x	197 kN	Ok
V_y^*	0.1 kN	ϕV_v	197 kN	Ok
M_x^*	0.26 kNm	ϕM_{sx}	23.2 kNm	Ok
		ϕM_{bx}	23.2 kNm	Ok
M_y^*	0.1 kNm	ϕM_{sy}	23.2 kNm	Ok
		ϕM_{bx}	23.2 kNm	Ok

From the tabulated results the following may be noted:

- the guide brackets are adequate for a direct impact;
- the guide brackets are likely to fail for a side-on impact. In a flood event, it is noted that the only bracket subjected to side on impact would be the rear-pile bracket which, should this fail, would not jeopardize the pontoon fixity; and
- the guide brackets are adequate for all non-debris induced loads (by inference of the results from the upstream pile guide bracket)

6. Impact from Large Debris

For the purposes of this analysis, impact by large debris is represented by a pontoon with 6m x 3m dimensions and weighing 15 tonnes. The depth of the pontoon is assumed to be 1.6m with the water line at 0.8m. The velocity of the large debris is assumed to be 5m/s

Pile actions have been estimated from the SAP2000 structural model whilst the capacities of the piles have been calculated in accordance with AS4100. The results are shown in Appendix A and these show that in the worst flood case, case single 800mm diameter (25mm wall thickness) steel pile driven to bedrock and with a point of fixity at RL -18m will fail. The analysis indicates that the first 2m of pile embedment will yield in the first instance and this will likely be followed by pile yield.

The next pile section that will not yield due to impact is a 1200 x 32 thick piles. Although the section is deemed adequate for impact load, it should be noted that the pile will deflect beyond acceptable limits as well as translate at the pile toe due to soil yield at the surface and toe.

It is understood that it is likely that the piles may be driven beyond the pile toe as noted in the drawings. Piles should be driven as required to achieve the specified axial capacity however, it is noted that deeper embedment will not necessarily translate to greater pile capacity. In the case of extreme flood events and worst case loading, the results show that the immediate geotechnical failure within the top 2m of soil is likely to be followed by bending of the pile beyond capacity which will mean snapping of the pile. Failure by pile yield may be prevented by a bigger pile section however, this will not prevent soil yield.

7. Montages

Montages of the West End terminal showing a row of 800mm diameter piles at 4m spacing extending out from the shoreline upstream of the proposed terminal, to provide protection from debris during a flood have been prepared based on the base montage provided by Cox Rainer through BCC. The montages developed are reproduced in Appendix B.

Appendix A

Structural Calculations

Appendix A - Structural Calculations

1. Introduction

The January 2011 flood in the Brisbane River resulted in a number of existing CityCat and CityFerry terminal being severely damaged. Brisbane City Council (BBE) is requesting a design check to be done using the January 2011 flood levels and recorded flow velocities which are substantially higher than the original design forces.

2. Structure Description

The structure to be verified is a pontoon fixed with five piles (ϕ=800 mm, 25 mm Thk).

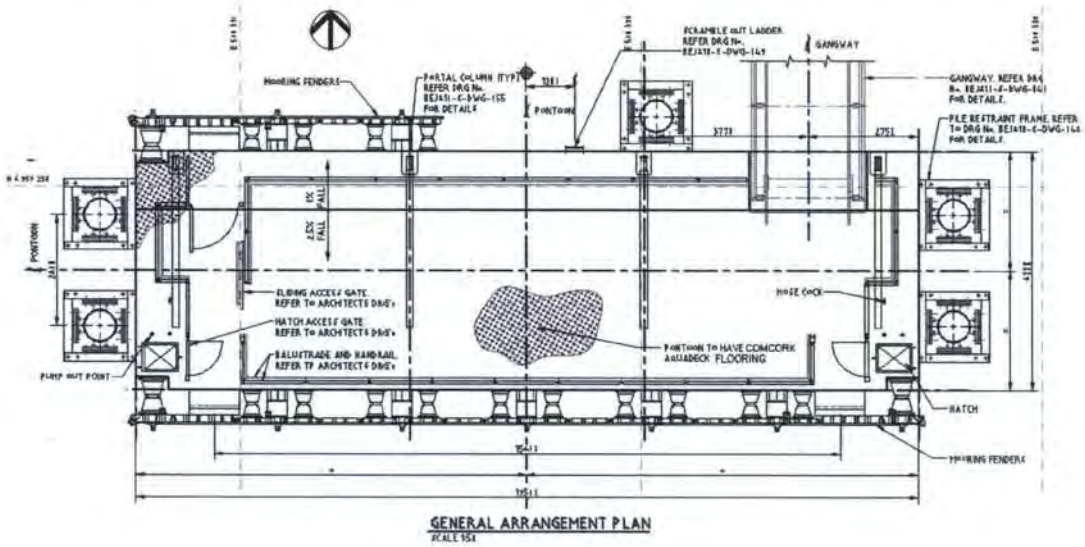

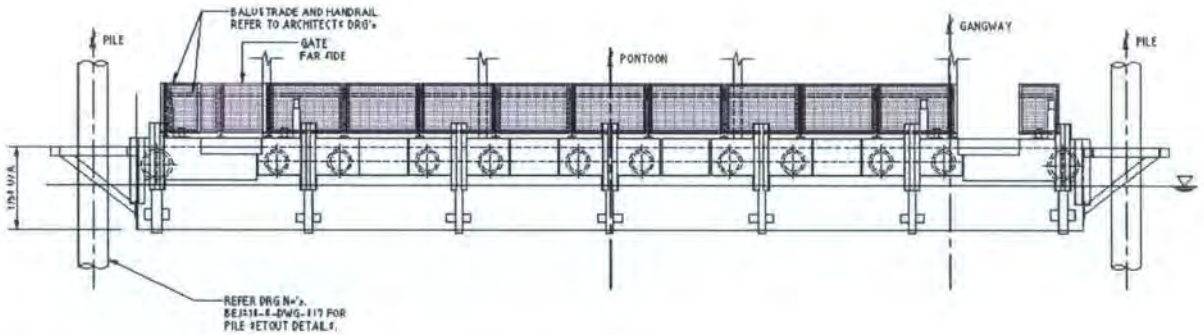

3. Codes, Standards and References

The design codes referenced are as follows:

AS 3692	Guidelines for Design of Marinas
AS 4997	Guidelines for the Design of Maritime Structures
AS 1170	Structural Design Actions - Loading Codes
AS 3600	Concrete Structures
AS 3610	Formwork Concrete Structures
AS 4100	Steel Structures
AS 1554	Structural Steel Welding
AS 2159	Piling Code
AS 1657	SAA Code for Fixed Platform, Walkways, Stairways and Ladders
AS 5100	Bridge Design
PIANC	Guidelines to de Design of Fender Systems
PIANC	Seismic Design Guidelines for Port Structures
PIANC	PIANC Criteria for Movements of Moored Ships in Harbours
BEJ810-W-REP-001 Rev. 0	West End Ferry Terminal Replacement - Design Basis Report

4. Material Properties and Sections

4.1 Hollow Sections

Steel grade 350 MPa

Yield stress: $f_y := 350MPa$

Tensile stress: $f_u := 430MPa$

4.2 Bolts

Stainless Steel 316 MPa Class 70

Yield stress: $\sigma_y := 316MPa$

Tensile stress: $\sigma_u := 430MPa$

5. Levels and Geometry

Tidal Levels (Refer to drawing BEJ810-S-DWG-002):

Highest astronomical tide:	HAT := 1.55m	AHD	
Mean height water spring:	MHWS := 0.98m	AHD	
Mean height water neaps:	MHWN := 0.57m	AHD	
Australian height Datum:	AHD := 0m	AHD	
Mean sea level:	MSL := 0.07m	AHD	
Mean low water neaps:	MLWN := –0.47m	AHD	
Mean low water spring:	MLWS := –0.88m	AHD	
Lowest astronomical tide:	LAT := –1.24m	AHD	
Maximum flood level:	MFL := 7.4m	AHD	(Informed for Paul O'keefe by email 03/05/2011)
Chart datum:	CD := 1.24m	AHD	

Structure Levels:

Sea bed level:	SBL := –6.00m
Scour allowance:	scour := 0m
Sea bed level design:	SB := SBL – scour = –6m
Pile toe level:	BTL := –18m

6. Soil Parameters

CLIENTS|PEOPLE|PERFORMANCE

CALCULATIONS

Client: Brisbane City Council | Job no. 41/24022/ | Sheet 1 of 1
Project: West End City Cat Terminal | Calcs by AM | Date 5/05/11
Subject: Geotechnical Model | Checked by TH | Date

* Based on BH1/09 and BH2/09

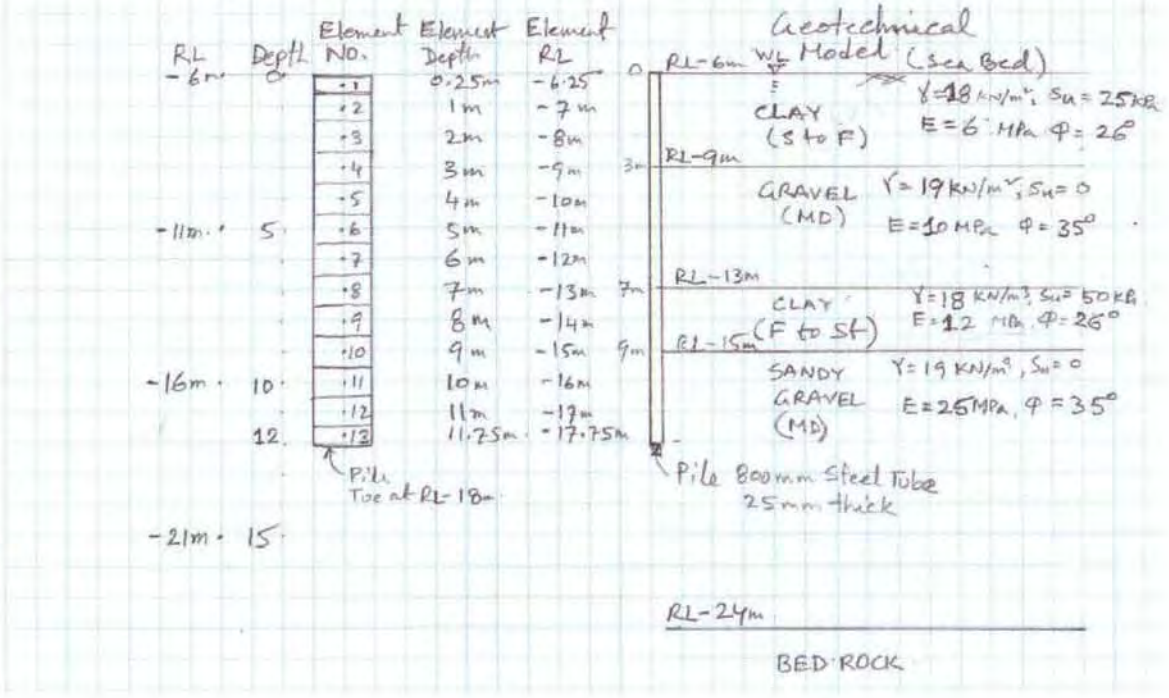

7. Loads

7.1 Dead load (G)

Dead loads shall be self weight of all the elements.

Concrete density: $\gamma_c := 24kN \cdot m^{-3}$

Steel density: $\gamma_s := 78kN \cdot m^{-3}$

7.2 Surcharge Loading

$q_s := 5kPa$ Surcharge load as noted in drawing 61-24558-S422

7.3 Current Load Over Piles

Load parameters:
- Marine growth (Assume 100 mm thk from MHWS to the Sea bed)
- Maximum velocity 10 knot (Informed for Paul O'keefe by email 03/05/2011)
- Assumed triangular distribution for velocity profile vs depth
- C_D is adopted as 1.4 (circular piles - rough, refer AS3962)

$v_{max} := 10knot$

$C_D := 1.4$

$\rho := 1000kg \cdot m^{-3}$

Nominal diameter of the pile: $D := 800mm$

Marine growth: $f := 100mm$

$$v(z) := v \leftarrow \begin{cases} \frac{v_{max}}{MFL - SB} \cdot z - \frac{SB \cdot v_{max}}{MFL - SB} & \text{if } SB \le z \le MFL \\ 0knot & \text{otherwise} \end{cases}$$

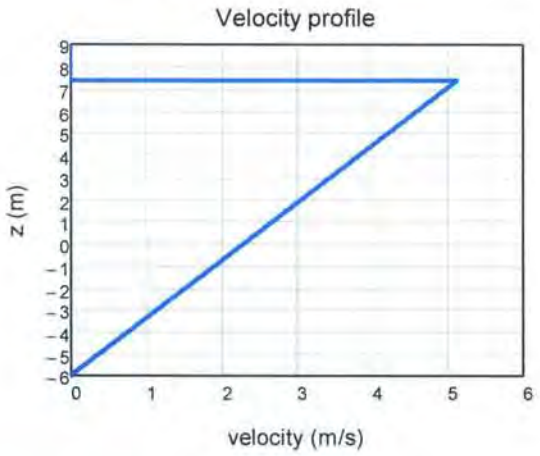

Note: z (to AHD)

Pressure: $p(z) := \frac{1}{2} \cdot \rho \cdot C_D \cdot v(z)^2$

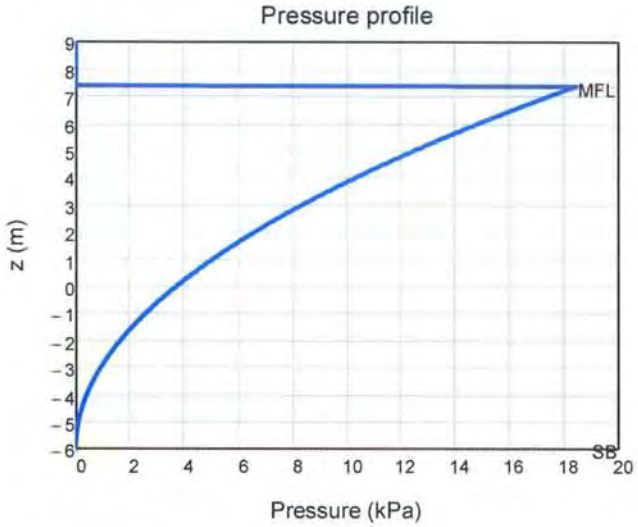

Note: z refered to AHD

Resultants forces:

$$F := \int_{SB}^{MHWS} p(z) \cdot (D + 2 \cdot f)\, dz + \int_{MHWS}^{MFL} p(z) \cdot D\, dz = 68.54 \cdot kN$$

$$M := \int_{SB}^{MHWS} p(z) \cdot (z - SB) \cdot (D + 2 \cdot f)\, dz + \int_{MHWS}^{MFL} p(z) \cdot (z - SB) \cdot D\, dz = 677.54 \cdot kN \cdot m$$

To simplify the analsys a triangular profile has been used for drag force:

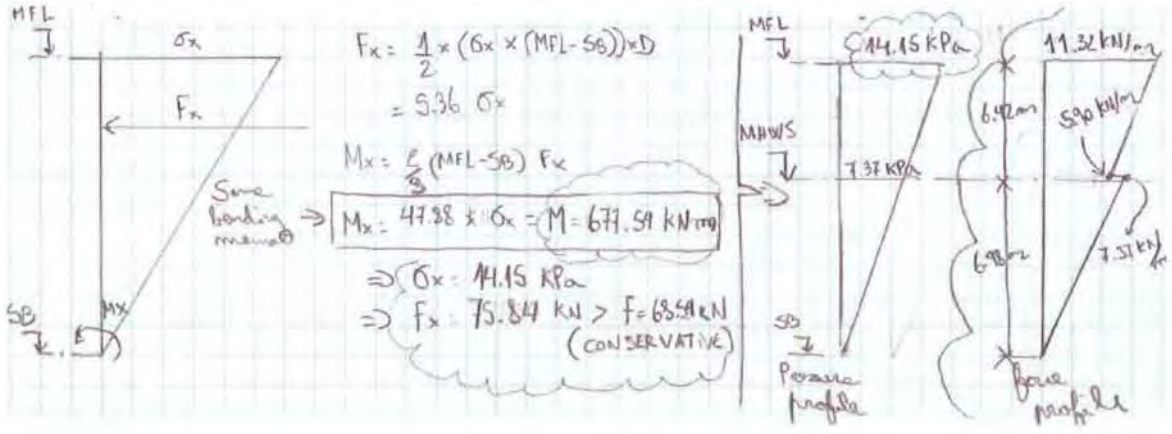

7.4 Debris Forces

a) Debris Distributed Load Over Pontoon (Refer clause 4.8.4.3 AS3962-2001)

$C_d := 1.0$

$v_{max} := 10knot$

$P := \frac{1}{2} \cdot \rho \cdot C_d \cdot v_{max}^2 = 13.23 \cdot kPa$

Debris mat. thickness > 2.0 x D

Draft pontoon: $D_f := 1.05m$ (Refer Item 2.2 of report BEJ810-W-REP-001 REv 0)

Width pontoon: $W_p := 6m$

$d := 2 \cdot D_f = 2.1\,m$

$F_{debris} := P \cdot d \cdot W_p = 166.73 \cdot kN$

a) Additional Debris Impact Load (Refer AS5100.2-2004)

$m_o := 2ton$

$\Delta := 300mm$

$v_{max} := 10knot$

$F := \frac{m_o}{\Delta} \cdot v_{max}^2 = 160.06 \cdot kN$

7.5 Seismic Loading

Seismic loading have not been considereded with maximum flood levels.

7.6 Wave Loads

Wave loading has not been considered with maximum flood levels.

7.7 Wind Loads

Wind loads were not considered significant and were not included in this review.

7.8 Berthing Loads

Berthing loads have not been considereded with maximum flood levels.

7.9 Mooring Loads

Mooring loads have not been considered with maximum flood levels.

7.10 Loading Combinations (Refer Appendix B report BEJ810-W-REP-001 Rev 0)

Nomenclature as follows:

G: Dead load

Q: Surcharge

C_t: Current load over piles

D_b: Debris load

7.10.1 Loading Combinations for Ultimate Strength Limit States (ULS)

(1) $1.25*G + 0.6*Q + 1.5*C_t$

(2) $0.9*G + 1.5*C_t$

(3) $1.2*G + 0.6*Q + 1.5*C_t + 1.5*D_b$

(4) $0.9*G + 1.5*C_t + 1.5*D_b$

7.7.2 Load Combination for Serviceability Limit States (SLS)

(11) $G + 0.6*Q + C_t$

(12) $0.9*G + C_t$

(13) $G + 0.6*Q + C_t + D_b$

(14) $0.9*G + C_t + D_b$

8. Structural Model and Actions

8.1 Structural Model Description

The structural analysis was carried out using SAP2000 V14, a 3D frame structural analysis and design program, in order to undertake the structural design review of the West End Terminal for the maximum flood level, which happened in January 2011.

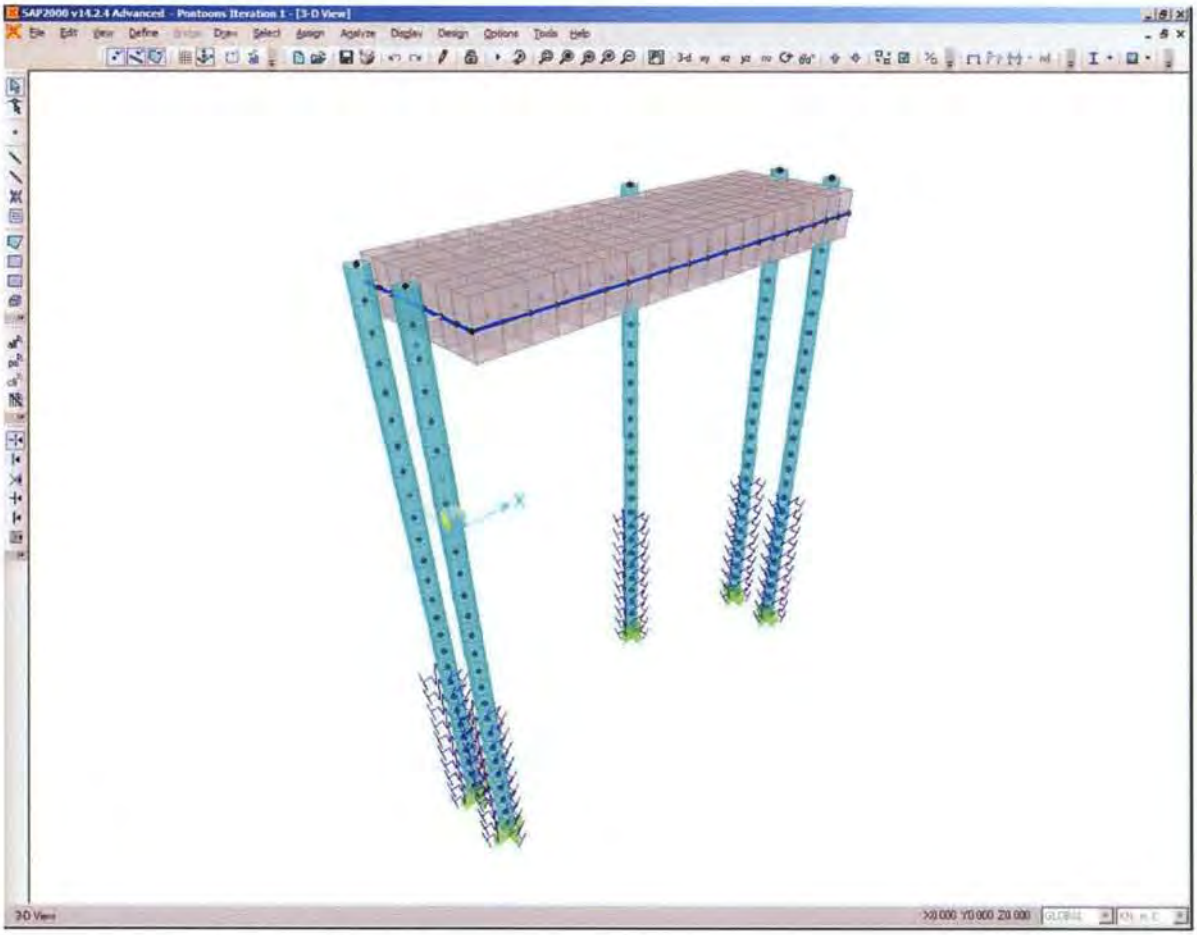

Figure 1: Structural Model in SAP 2000

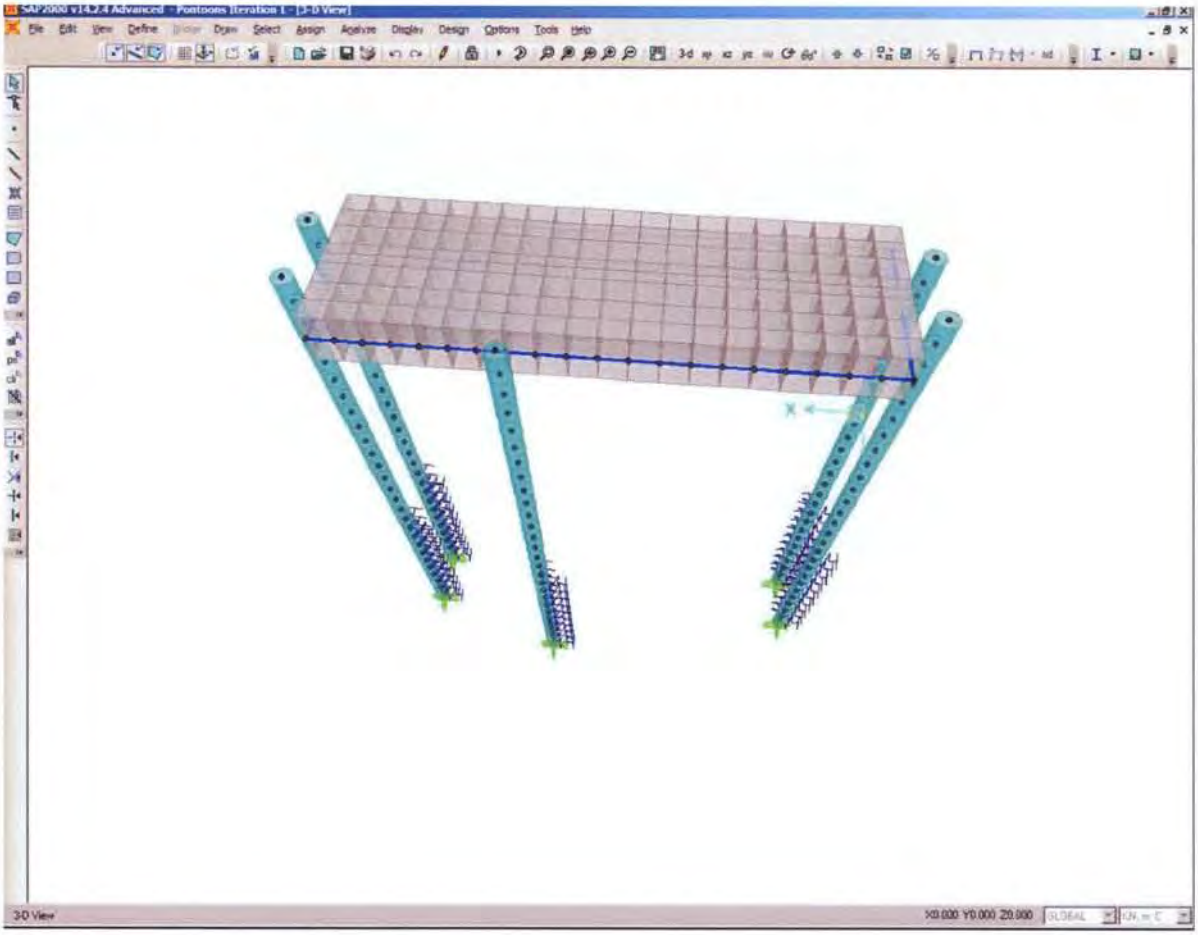

Figure 2: Structural Model in SAP 2000

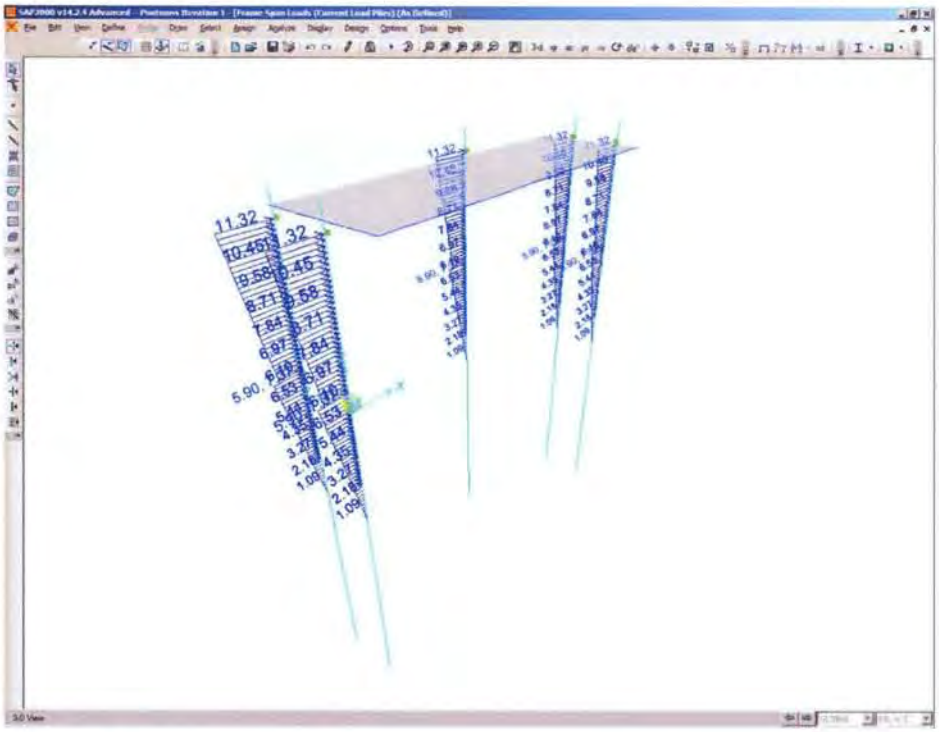

Figure 3: Piles Current Loading

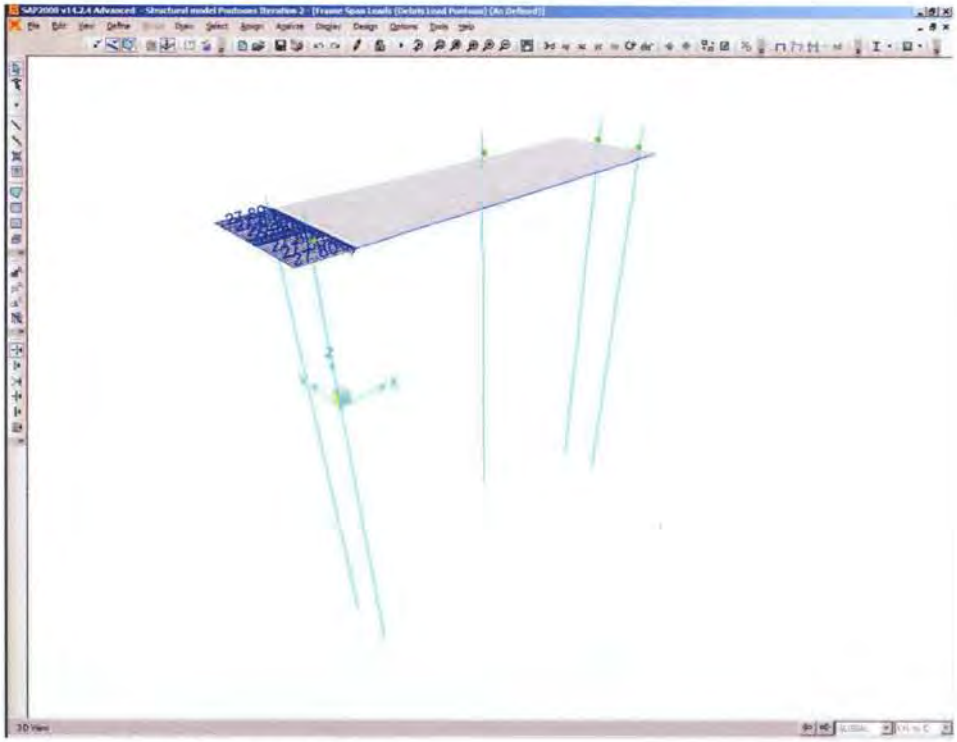

Figure 4: Debris force over pontoon

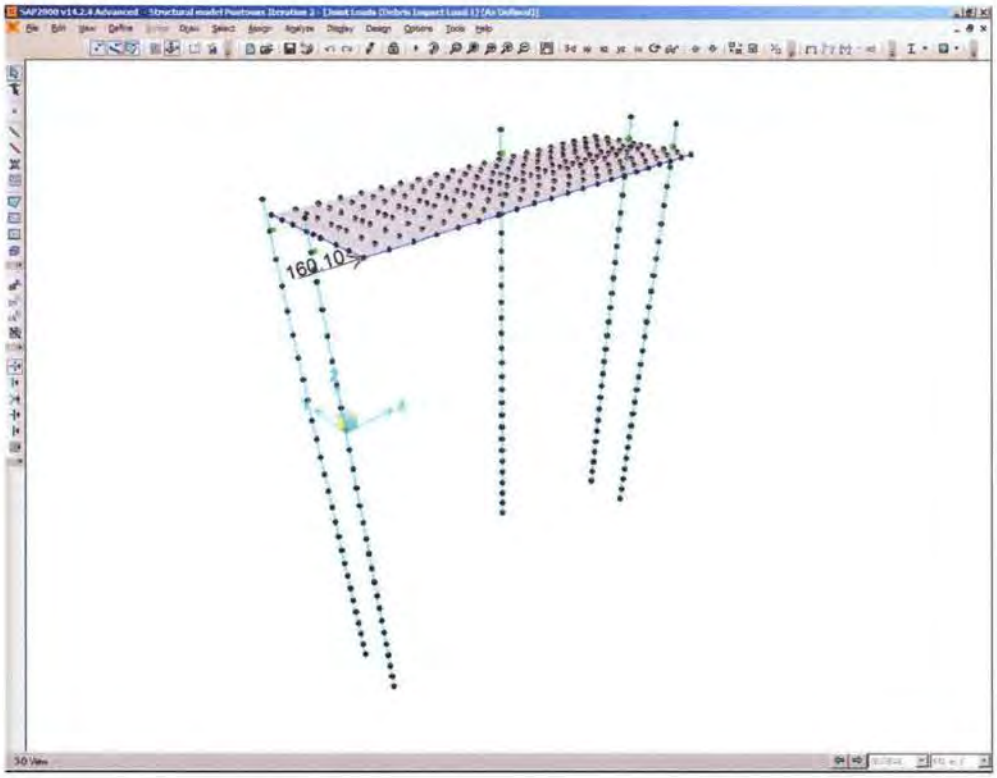

Figure 5: Pontoon Debris Loading

8.2 Structural Model Results (Refer SAP2000 V14 Outputs)

8.2.1 Pile Actions

Ultimate Actions

Bending moment principal axis:	$M_{ux} := 1960kN \cdot m$
Bending moment secondary axis:	$M_{uy} := 350kN \cdot m$
Shear:	$V_u := 460kN$
Axial Compresion force:	$N_{uc} := 150kN$
Axial Tension force:	$N_{ut} := 0kN$

9. Design of Structural Elements

9.1 Tubular Pile Design

A) Steel Properties

Steel elasticity modulus: $E := 2059000MPa$

Poisson ratio: $\nu := 0.3$

Steel shear modulus: $G := \frac{E}{2 \cdot (1 + \nu)} = 791923 \cdot MPa$

B) Section Properties

Flexible length: $L := 18.5m$

Outside diameter: $OD := 800mm$

Thickness: $t := 25mm$

Inside diameter: $ID := OD - 2 \cdot t = 750 \cdot mm$

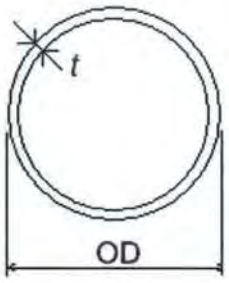

$r_1 := \frac{OD}{2} - \frac{t}{2} = 387.5 \cdot mm$

- Area: $A := \frac{\pi}{4} \cdot \left(OD^2 - ID^2\right) = 94.35 \cdot in^2$
- Weight x meter: $w := A \cdot 7.85 tonf \cdot m^{-3} = 478 \cdot kgf \cdot m^{-1}$
- Moment of inertia $I := \frac{\pi}{64} \cdot \left(OD^4 - ID^4\right) = 457464 \cdot cm^4$
- Radius of gyration: $r := \sqrt{\frac{I}{A}} = 27.41 \cdot cm$
- Elastic modulus: $Z := \frac{2 \cdot I}{OD} = 11437 \cdot cm^3$
- Plastic modulus: $S := \frac{A}{\pi \cdot r_1} \cdot \left(2 \cdot r_1^2 + \frac{t^2}{6}\right) = 15021 \cdot cm^3$
- Effective length factor: $k_e := 2.2$
- Torsional factor. $J := \frac{4 \cdot \left[\frac{\pi}{4} \cdot \left(OD - \frac{t}{2}\right)^2\right]^2}{\frac{\pi \cdot \left(OD - \frac{t}{2}\right)}{t}} = 958918 \cdot cm^4$

C) Axial Compression Capacity

C.1 Nominal Section Capacity

Element slenderness: $\lambda_e := \left(\frac{OD}{t}\right)\cdot\left(\frac{f_y}{250MPa}\right) = 44.8$

Yield slenderness: $\lambda_{ey} := 82$ (Table 6.2.4 AS4100-1998)

Effective outside diameter: $d_e := \min\left[OD\cdot\sqrt{\frac{\lambda_{ey}}{\lambda_e}}, OD, OD\cdot\left(\frac{3\cdot\lambda_{ey}}{\lambda_e}\right)^2\right] = 800\cdot mm$

Effective area: $A_e := \frac{\pi}{4}\cdot\left[d_e^{\,2} - \left(d_e - 2\cdot t\right)^2\right] = 608.68\cdot cm^2$

Form factor: $k_f := \frac{A_e}{A} = 1$

Nominal section capacity: $N_s := k_f A\cdot f_y = 21304\cdot kN$

$\phi N_s := 0.9\cdot N_s = 19174\cdot kN$

C.2 Nominal Capacity of a Member of Constant Cross-Section

Effective length: $l_e := k_e\cdot L = 40.7\cdot m$

$\lambda_n := \left(\frac{l_e}{r}\right)\cdot\sqrt{k_f}\sqrt{\frac{f_y}{250MPa}} = 175.66$

$\alpha_a := \frac{2100\cdot\left(\lambda_n - 13.5\right)}{\lambda_n^{\,2} - 15.3\cdot\lambda_n + 2050} = 11.27$

$\alpha_b := -0.5$ (See table 6.3.1(1) and 6.3.3(2) AS4100-1998)

$\lambda := \lambda_n + \alpha_a\cdot\alpha_b = 170.03$

$\eta := \max[0.00326\cdot(\lambda - 13.5), 0] = 0.51$

$\xi := \frac{\left(\frac{\lambda}{90}\right)^2 + 1 + \eta}{2\cdot\left(\frac{\lambda}{90}\right)^2} = 0.71$

Member slenderness reduction factor: $\alpha_c := \xi \cdot \left[1 - \sqrt{1 - \left(\frac{90}{\xi \cdot \lambda}\right)^2}\right] = 0.24$

Nominal member capacity: $N_c := \min(\alpha_c \cdot N_s, N_s) = 5028 \cdot kN$

$\phi N_c := 0.9 \cdot N_c = 4525 \cdot kN$

D) Axial Tension Capacity

$\phi N_t := 0.9 \cdot A \cdot f_y = 19174 \cdot kN$

E) Bending Moment Capacity

E.1 Nominal Section Moment Capacity

Section slenderness: $\lambda_s := \left(\frac{OD}{t}\right)\cdot\left(\frac{f_y}{250MPa}\right) = 44.8$

TABLE 5.2 *(continued)*

Plate element type	Longitudinal edges supported	Residual stresses (see Notes)	Plasticity limit (λ_{ep})	Yield limit (λ_{ey})	Deformation limit (λ_{ed})
Circular hollow sections		SR	50	120	—
		HR, CF	50	120	—
		LW	42	120	—
		HW	42	120	—

NOTES:

1 SR—stress relieved
HR—hot-rolled or hot-finished
CF—cold formed
LW—lightly welded longitudinally
HW—heavily welded longitudinally

2 Welded members whose compressive residual stresses are less than 40 MPa may be considered to be lightly welded.

$\lambda_{sp} := 42$

(Table 5.2 AS4100-1998)

$\lambda_{sy} := 120$

"Compact section" if $\lambda_s \le \lambda_{sp}$ = "No compact section"

"No compact section" if $\lambda_{sp} < \lambda_s \le \lambda_{sy}$

"Slender section" otherwise

$$Z_e := \begin{cases} \min(S, 1.5\cdot Z) & \text{if } \lambda_s \le \lambda_{sp} \\ Z + \left[\left(\frac{\lambda_{sy} - \lambda_s}{\lambda_{sy} - \lambda_{sp}}\right)\cdot(\min(S, 1.5\cdot Z) - Z)\right] & \text{if } \lambda_{sp} < \lambda_s \le \lambda_{sy} \\ \min\left[Z\cdot\sqrt{\frac{\lambda_{sy}}{\lambda_s}}, Z\cdot\left(\frac{2\cdot\lambda_{sy}}{\lambda_s}\right)^2\right] & \text{otherwise} \end{cases} = 14892\cdot cm^3$$

Nominal section moment capacity:

$M_{sx} := Z_e\cdot f_y = 5212\cdot kN\cdot m$

$\phi M_{sx} := 0.9\cdot M_{sx} = 4691\cdot kN\cdot m$

$M_{sy} := M_{sx} = 5212\cdot kN\cdot m$

$\phi M_{sy} := 0.9\cdot M_{sy} = 4691\cdot kN\cdot m$

E.2 Nominal Member Moment Capacity

From bending moment diagram you must obtain:

Maximum bending moment in the segment: $M_m := 1960kN \cdot m$

Bending moment at the quarter points of the segment: $M_2 := 1621kN \cdot m$ $M_4 := 800kN \cdot m$

Bending moment at the midpoint of the segment: $M_3 := 1848kN \cdot m$

Moment factor modification: $\alpha_m := \min\left(2.5, \frac{1.7 \cdot M_m}{\sqrt{M_2^2 + M_3^2 + M_4^2}}\right) = 1.29$

$M_{oa} := \sqrt{\left(\frac{\pi^2 \cdot E \cdot I}{l_e^2}\right) \cdot G \cdot J} = 652821 \cdot kN \cdot m$ (Iw = 0 Refer to clause 5.1.6.4 AS4100-1998)

Slender reduction factor: $\alpha_{sx} := 0.6 \cdot \left[\sqrt{\left(\frac{M_{sx}}{M_{oa}}\right)^2 + 3} - \frac{M_{sx}}{M_{oa}}\right] = 1.03$

$\alpha_{sy} := 0.6 \cdot \left[\sqrt{\left(\frac{M_{sy}}{M_{oa}}\right)^2 + 3} - \frac{M_{sy}}{M_{oa}}\right] = 1.03$

Member capacity segment without full lateral restraint: $\phi M_{bx} := 0.9 \min\left(\alpha_m \cdot \alpha_{sx} \cdot M_{sx}, M_{sx}\right) = 4691 \cdot kN \cdot m$

$\phi M_{by} := 0.9 \min\left(\alpha_m \cdot \alpha_{sy} \cdot M_{sy}, M_{sy}\right) = 4691 \cdot kN \cdot m$

F) Shear Capacity

$\phi V := 0.9 \cdot 0.36 \cdot f_y \cdot A = 6902 \cdot kN$

G) Section Capacity Summary

$$\phi M_{rx} := \phi M_{sx}\cdot\left(1-\frac{N_{uc}}{\phi N_s}\right) = 4654\cdot kN\cdot m$$

$$\phi M_{ry} := \phi M_{sy}\cdot\left(1-\frac{N_{uc}}{\phi N_s}\right) = 4654\cdot kN\cdot m$$

$$\phi M_{ix} := 0.9M_{sx}\cdot\left(1-\frac{N_{uc}}{\phi N_c}\right) = 4536\cdot kN\cdot m$$

$$\phi M_{iy} := 0.9M_{sy}\cdot\left(1-\frac{N_{uc}}{\phi N_c}\right) = 4536\cdot kN\cdot m$$

$$\phi V_{vm} := \begin{cases} \phi V & \text{if } M_{ux} \le 0.75\cdot\phi M_{sx} \\ \phi V\cdot\left[2.2-\left(\frac{M_{ux}}{\phi M_{sx}}\right)\right] & \text{if } 0.75\cdot\phi M_{sx} \le M_{ux} \le \phi M_{sx} \\ \text{"Overstress bending moment"} & \text{otherwise} \end{cases} = 6902\cdot kN$$

	Section capacities:	Member capacities:
Axial compression capacity:	$\phi N_s = 19174\cdot kN$	$\phi N_c = 4525\cdot kN$
Axial tension capacity:	$\phi N_t = 19174\cdot kN$	
Bending moment capacity principal axis:	$\phi M_{sx} = 4691\cdot kN\cdot m$	$\phi M_{bx} = 4691\cdot kN\cdot m$
Bending moment capacity secondary axis:	$\phi M_{sy} = 4691\cdot kN\cdot m$	$\phi M_{by} = 4691\cdot kN\cdot m$
Shear:	$\phi V = 6902\cdot kN$	$\phi V_{vm} = 6902\cdot kN$
Nominal capacity reduced by axial force principal axis:	$\phi M_{rx} = 4654\cdot kN\cdot m$	$\phi M_{ix} = 4536\cdot kN\cdot m$
Nominal capacity reduced by axial force secondary axis:	$\phi M_{ry} = 4654\cdot kN\cdot m$	$\phi M_{iy} = 4536\cdot kN\cdot m$

H) Section Capacity Checks

	Section Check	% Utilisation
Section capacity:		
Compression:	"OK" if $N_{uc} < \phi N_s$ = "OK"; "NOT OK" otherwise	$\frac{N_{uc}}{\phi N_s} = 0.78\%$
Tension:	"OK" if $N_{ut} < \phi N_t$ = "OK"; "NOT OK" otherwise	$\frac{N_{ut}}{\phi N_t} = 0\%$
Bending moment principal axis:	"OK" if $M_{ux} < \phi M_{sx}$ = "OK"; "NOT OK" otherwise	$\frac{M_{ux}}{\phi M_{sx}} = 41.8\%$
Bending moment secondary axis:	"OK" if $M_{uy} < \phi M_{sy}$ = "OK"; "NO OK" otherwise	$\frac{M_{uy}}{\phi M_{sy}} = 7.46\%$
Shear:	"OK" if $V_u < \phi V$ = "OK"; "NOT OK" otherwise	$\frac{V_u}{\phi V} = 6.7\%$
Bending moment reduced by axial force principal axis:	"OK" if $M_{ux} < \phi M_{rx}$ = "OK"; "NOT OK" otherwise	$\frac{M_{ux}}{\phi M_{rx}} = 42.1\%$
Bending moment reduced by axial force secondary axis:	"OK" if $M_{uy} < \phi M_{ry}$ = "OK"; "NOT OK" otherwise	$\frac{M_{uy}}{\phi M_{ry}} = 7.52\%$
Reduced shear interaction shear - moment:	"OK" if $V_u < \phi V_{vm}$ = "OK"; "NOT OK" otherwise	$\frac{V_u}{\phi V_{vm}} = 6.7\%$
Member capacity:		
Compression:	"OK" if $N_{uc} < \phi N_c$ = "OK"; "NOT OK" otherwise	$\frac{N_{uc}}{\phi N_c} = 3.3\%$
Bending moment principal axis:	"OK" if $M_{ux} < \phi M_{bx}$ = "OK"; "NOT OK" otherwise	$\frac{M_{ux}}{\phi M_{bx}} = 41.8\%$
Bending moment secondary axis:	"OK" if $M_{uy} < \phi M_{by}$ = "OK"; "NOT OK" otherwise	$\frac{M_{uy}}{\phi M_{by}} = 7.5\%$
Bending moment reduced by axial force principal axis:	"OK" if $M_{ux} < \phi M_{ix}$ = "OK"; "NOT OK" otherwise	$\frac{M_{ux}}{\phi M_{ix}} = 43.2\%$
Bending moment reduced by axial force secondary axis:	"OK" if $M_{uy} < \phi M_{iy}$ = "OK"; "NOT OK" otherwise	$\frac{M_{uy}}{\phi M_{iy}} = 7.72\%$
Biaxial:	"OK" if $\frac{N_{uc}}{\phi N_s} + \frac{M_{ux}}{\phi M_{sx}} + \frac{M_{uy}}{\phi M_{sy}} \le 1$ = "OK"; "NOT OK" otherwise	$\frac{N_{uc}}{\phi N_s} + \frac{M_{ux}}{\phi M_{sx}} + \frac{M_{uy}}{\phi M_{sy}} = 50\%$

I) Deflections

Maximum pile deflection no greather than: 0.05D = 40mm (refer AS2159 clause 8.4.3.5)

The maximum horizontal deflection in the pontoon at level +7.4 m AHD **is 226 mm > 40 mm** as shown in the figure 6. Therefore exceed serviceability.

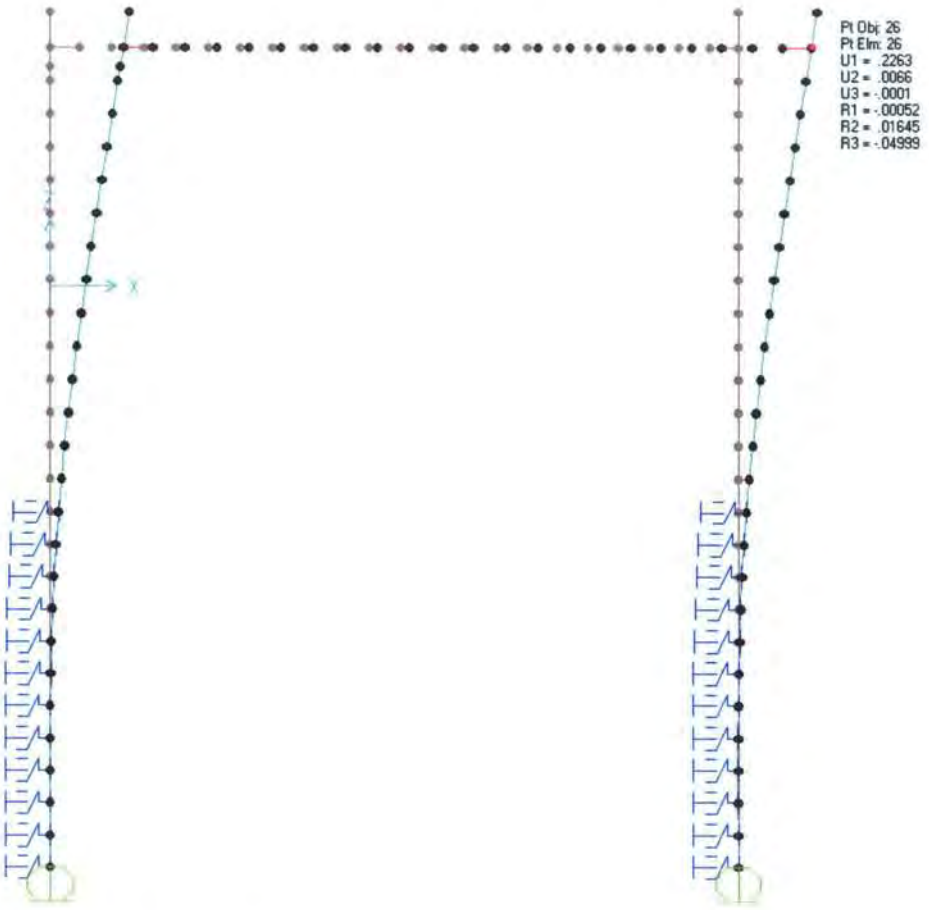

Figure 6: Displacement of the Piles

GHD CLIENTS|PEOPLE|PERFORMANCE

CALCULATIONS

Client	BRISBANE CITY COUNCL	Job no.	41241022
Project	CITYCAT FLOOD CONDITION	Calcs by	J.GOME
Subject	PILE DEFORMATION CHECK.	Checked by	C. ALFRED
		Sheet	24 of 54
		Date	06/05/2011
		Date	11/05/2011

PILE DEFORMATION CHECKS.

Hypothesis:

- Maximum Strain $\leq \varepsilon_y \Rightarrow \sigma_{max} \leq \sigma_y$ (*)

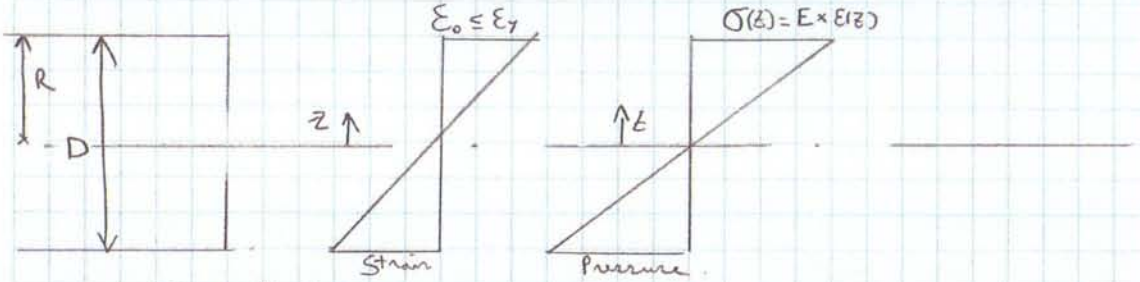

$\sigma(z) = E\,\varepsilon(z)$

$\sigma(z) = E\,\varepsilon_0 \frac{z}{R}$

R = 400 mm.
E = 2,059,000 MPa
t = 25 mm.
M = 1500 kN×m

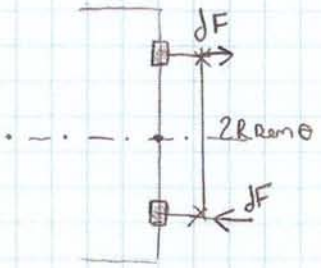

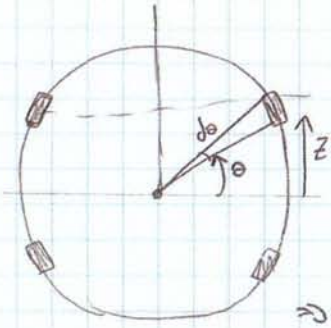

$dF = \sigma \times dA$

$dF = E\frac{\varepsilon_0 z}{R} \times R\,d\theta\,t$

$dF = \varepsilon_0 E \varepsilon t\,d\theta$

$z = R\cos\theta$

$\Rightarrow dF = [\varepsilon_0 E R \cos\theta\, t]\,d\theta$

$dM = 2R\cos\theta \times 2dF = 2R\cos\theta\, 2\varepsilon_0 E R \cos\theta\, t\,d\theta$

$= 4 \times R^2 \times E \times \varepsilon_0 \times t \cos^2\theta\, d\theta$

$M = \int_0^{\frac{\pi}{2}} dM \Rightarrow M = 4R^2 E \varepsilon_0 t \int_0^{\frac{\pi}{2}} \cos^2\theta\, d\theta$

$\Rightarrow \varepsilon_0 = \frac{M}{4R^2 E \varepsilon_0 t \int_0^{\frac{\pi}{2}} \cos^2\theta\, d\theta} = 0.00006 \leq \varepsilon_y$ (*) ✓

$\sigma_{MAX} = \varepsilon_0 E = 124\ MPa < \sigma_Y = 350\ MPa$ i.e. The extreme fibre is within elastic limit OK

$\Rightarrow$ Plastic displacements are not happening in this case.

9.2 Pile Guide Bracket Review

9.2.1 Guide Bracket at Pontoon Rear Pile

A model has been setup to obtain the worst condition for the guide bracket 1 as shown in the figure 7.

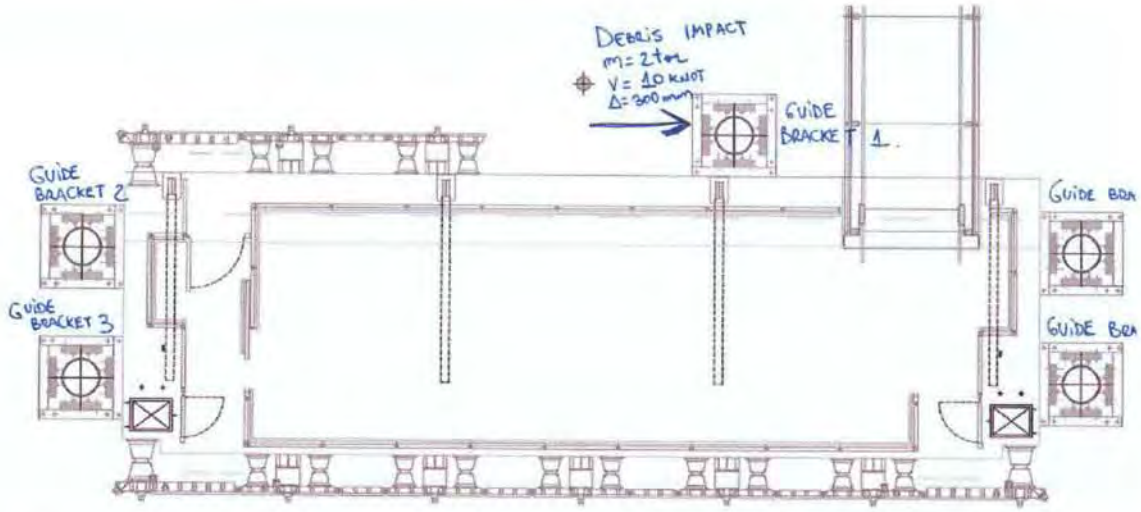

Figure 7: Guide Bracket 1

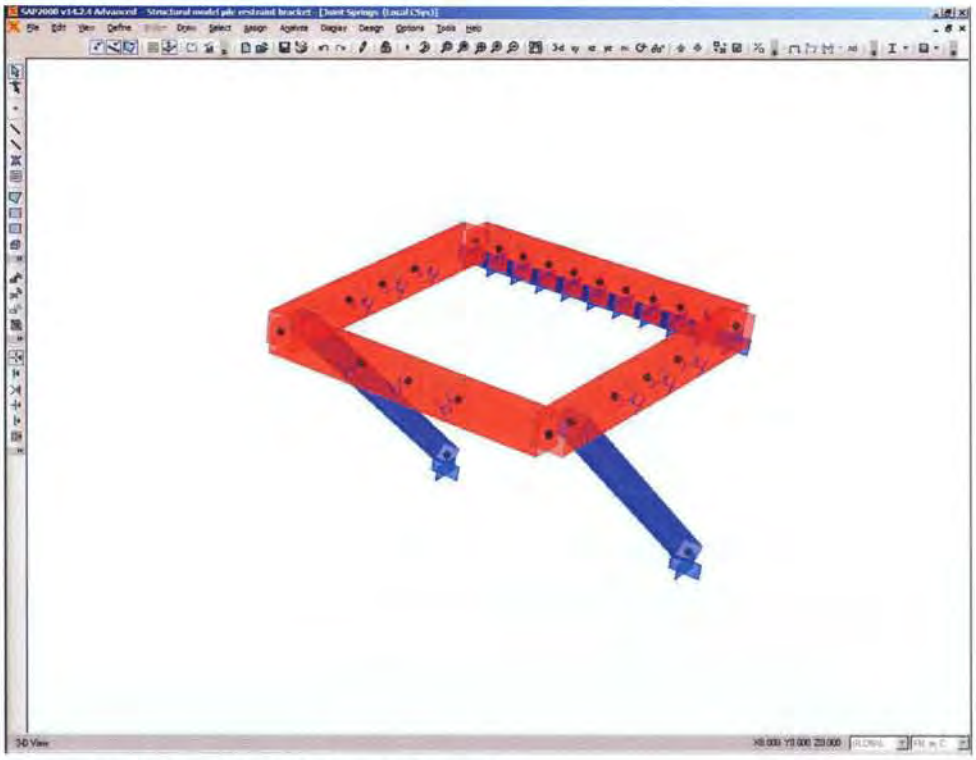

Figure 8: Structural Model #1 of Guide Bracket

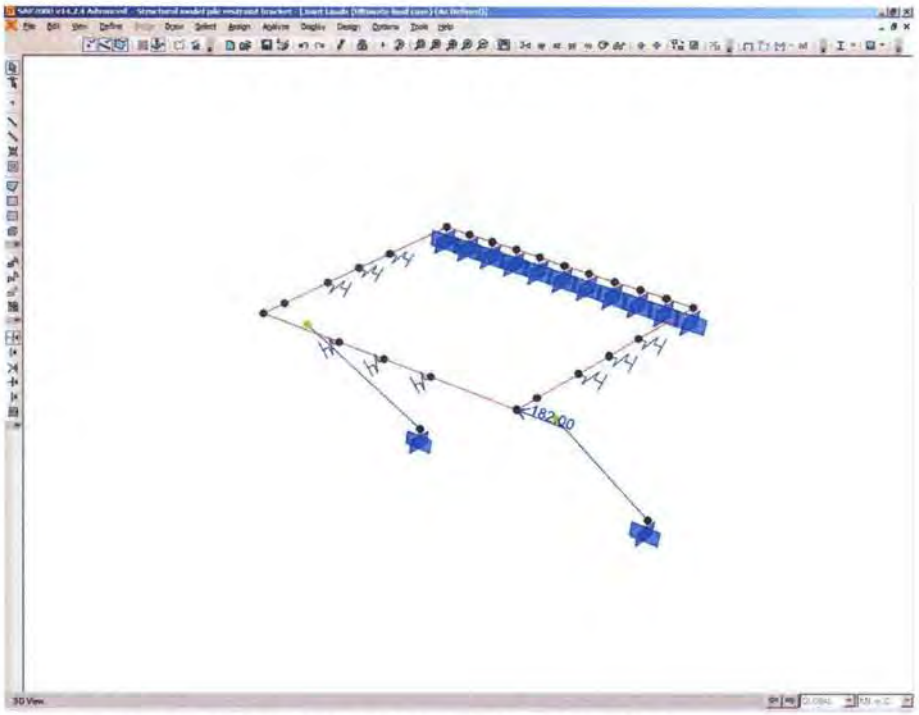

Figure 9: Debris Impact 150 x150x6 SHS Guide Bracket 1 - Case 1

Note that the impact as shown in Figure 10 and 11 are deemed to be improbable.

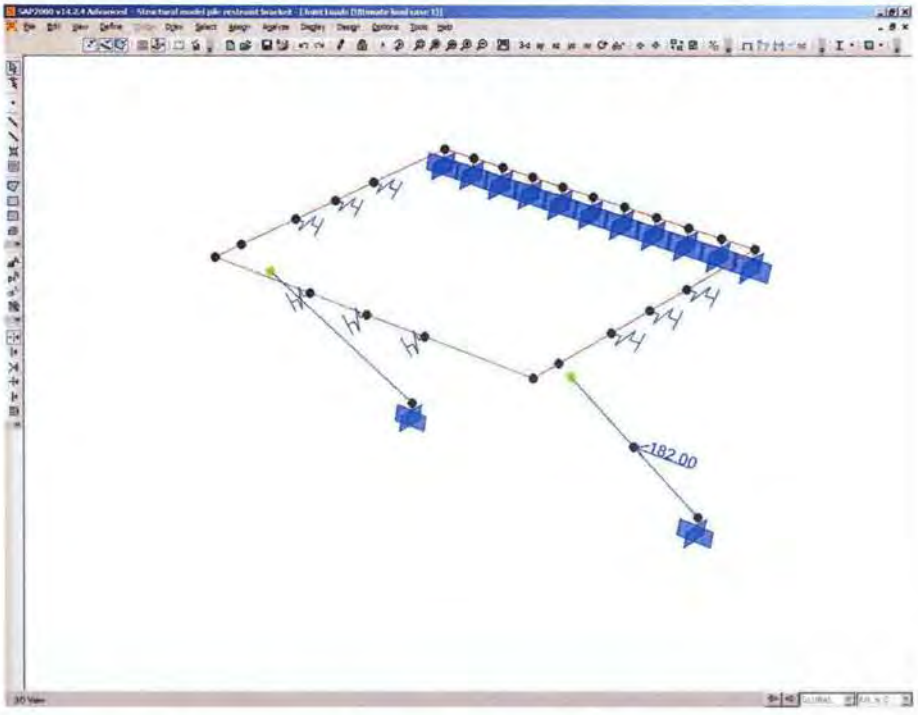

Figure 10: Debris Impact 100 x100x6 SHS Guide Bracket 1 - Case 2

Capacity checks as follows:

Standard Section Capacity - 250/350 Grade Closed Sections

Steel Properties				**Beam Properties**			Date	12/05/11					
E	200	GPa		L_{ex}	1.4	m							
G	80	GPa		α_{mx}	1		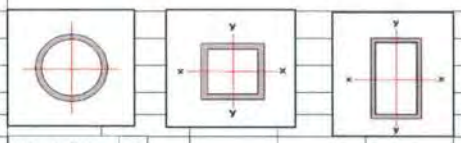						
f_y	350	MPa		L_{ey}	1.4	m							
f_u	430	MPa		α_{my}	1								
Section Properties				**Column Properties**									
				L_{ex}	1.4	m	SHS - 350 (1)						
				L_{ey}	1.4	m					M_x^*	69	kNm
k_1	1			k_f	1		150 x 6.0 SHS				M_y^*	0.25	kNm
A_{holes}	0	mm^2		α_b	-0.5		Grade	350					
A_g	3330	mm^2					$t_{torsion}$	6	mm		V_x^*	95	kN
A_{nett}	3330	mm^2									V_y^*	0	kN
I_x	11.3	$x10^{-6}$ m^4		I_y	11.3	$x10^{-6}$ m^4							
r_x	58.2	mm		r_y	58.2	mm					N_c^*	73	kN
Z_x	150	$x10^{-6}$ m^3		Z_y	150	$x10^{-6}$ m^3					N_t^*	74	kN
S_x	178	$x10^{-6}$ m^3		S_y	178	$x10^{-6}$ m^3							
Z_{ex}	175	$x10^{-6}$ m^3		Z_{ey}	175	$x10^{-6}$ m^3					T^*	0	kNm
M_{cx}	4093	kNm		M_{cy}	4093	kNm							
I_{wx}	0	$x10^{-9}$ m^6		I_{wy}	0	$x10^{-9}$ m^6							
J	18400	$x10^{-9}$ m^4											
ϕM_{sx}	55.1	kNm	125.2%	Warning		ϕV_{vx}	309	kN	30.7%	Okay			
ϕM_{bx}	55.1	kNm	125.2%	Warning		ϕV_{vy}	309	kN	0.0%	Okay			
ϕM_{sy}	55.1	kNm	0.5%	Okay		ϕN_s	1049	kN	7.0%	Okay			
ϕM_{by}	55.1	kNm	0.5%	Okay		ϕN_{cx}	1019	kN	7.2%	Okay			
						ϕN_{cy}	1019	kN	7.2%	Okay			
ϕT	579.6	kNm	0.0%	Okay		ϕN_t	1049	kN	7.1%	Okay			
Compression - Section Capacities													
		ϕM_{rx}	51.29	kNm		134.5%	Warning						
		ϕM_{ry}	51.29	kNm		0.5%	Okay						
$N^*_c/\phi N_s + M^*_x/\phi M_{sx} + M^*_y/\phi M_{sy}$			1.33	< 1.0			Warning						
		ϕM_u	51.18	kNm		134.8%	Warning						
		ϕM_{cx}	51.18	kNm		134.8%	Warning						
		ϕM_{cx}	51.18	kNm		134.8%	Warning						
		ϕM_{ry}	51.18	kNm		0.5%	Okay						
$(M^*_x/\phi M_{cx})^{1.4} + (M^*_y/\phi M_{ry})^{1.4}$			1.52	< 1.0			Warning						
Tension - Section Capacities													
		ϕM_{rx}	51.24	kNm		134.7%	Warning						
		ϕM_{ry}	51.24	kNm		0.5%	Okay						
$N^*_t/\phi N_t + M^*_x/\phi M_{sx} + M^*_y/\phi M_{sy}$			1.33	< 1.0			Warning						
		ϕM_{ru}	51.24	kNm		134.7%	Warning						
		ϕM_{ux}	51.24	kNm		134.7%	Warning						
		ϕM_{ry}	51.24	kNm		134.7%	Warning						
		ϕM_{ry}	51.24	kNm		0.5%	Okay						
$(M^*_x/\phi M_{rx})^{1.4} + (M^*_y/\phi M_{ry})^{1.4}$			1.52	< 1.0			Warning						
Combined Shear/Bending													
		ϕV_{vmx}	61.0	kN		155.8%	Warning						
		ϕV_{vmy}	309.1	kN		0.0%	Okay						
CHECK Combined Shear/Bending/Torsion													
Input cell													

GHD | CLIENTS | PEOPLE | PERFORMANCE

Client:	Brisbane City Council	Job No.	4124022	Sheet:	27 of 54
Project:	CityCat Flood Condition Design Check-GB1-C1	Calcs by	[redacted]	Date:	6/05/2011
Subject:	Capacity 150x150x6 SHS	Checked by	[redacted]	Date:	11/10/2011

Standard Section Capacity - 250/350 Grade Closed Sections

Steel Properties				**Beam Properties**			Date	12/05/11					
E	200	GPa		L_{sx}	1.54	m							
G	80	GPa		α_{mx}	1								
f_y	350	MPa		L_{sy}	1.54	m							
f_u	430	MPa		α_{my}	1								
Section Properties				**Column Properties**			SHS - 350 (2)						
				L_{ex}	1.54	m					M_x^*	0	kNm
				L_{ey}	1.54	m					M_y^*	61	kNm
k_t	1			k_x	1		100 x 6.0 SHS						
A_{holes}	0	mm^2		α_b	-0.5		Grade	350					
A_g	2130	mm^2					$t_{torsion}$	6	mm		V_x^*	126	kN
A_{net}	2130	mm^2									V_y^*	0	kN
I_x	3.04	$x10^{-6}$ m^4		I_y	3.04	$x10^{-6}$ m^4							
r_x	37.7	mm		r_y	37.7	mm					N_v^*	17	kN
Z_x	60.7	$x10^{-6}$ m^3		Z_y	60.7	$x10^{-6}$ m^3					N_t^*	0	kN
S_x	73.5	$x10^{-6}$ m^3		S_y	73.5	$x10^{-6}$ m^3							
Z_{ex}	73.5	$x10^{-6}$ m^3		Z_{ey}	73.5	$x10^{-6}$ m^3					T^*	0	kNm
M_{ox}	1021	kNm		M_{oy}	1021	kNm							
I_{wx}	0	$x10^{-9}$ m^6		I_{wy}	0	$x10^{-9}$ m^6							
J	5150	$x10^{-9}$ m^4											

ϕM_{sx}	23.2	kNm	0.0%	Okay	ϕV_{vx}	197	kN	63.9%	Okay	
ϕM_{bx}	23.2	kNm	0.0%	Okay	ϕV_{vy}	197	kN	0.0%	Okay	
ϕM_{sy}	23.2	kNm	263.5%	Warning	ϕN_t	671	kN	2.5%	Okay	
ϕM_{by}	23.2	kNm	263.5%	Warning	ϕN_{cs}	612	kN	2.8%	Okay	
					ϕN_{cy}	612	kN	2.8%	Okay	
ϕT	162.2	kNm	0.0%	Okay	ϕN_t	671	kN	0.0%	Okay	

Compression - Section Capacities					
ϕM_{rx}	22.57	kNm	0.0%	Okay	
ϕM_{ry}	22.57	kNm	270.3%	Warning	
$N^*_c/\phi N_s + M^*_x/\phi M_{sx} + M^*_y/\phi M_{sy}$	2.66	< 1.0		Warning	
ϕM_{rx}	22.51	kNm	0.0%	Okay	
ϕM_{ox}	22.51	kNm	0.0%	Okay	
ϕM_{cx}	22.51	kNm	0.0%	Okay	
ϕM_{ry}	22.51	kNm	271.0%	Warning	
$(M^*_x/\phi M_{cx})^{1.4} + (M^*_y/\phi M_{ry})^{1.4}$	4.04	< 1.0		Warning	

Tension - Section Capacities					
ϕM_{rx}	23.15	kNm	0.0%	Okay	
ϕM_{ry}	23.15	kNm	263.5%	Warning	
$N^*_t/\phi N_t + M^*_x/\phi M_{sx} + M^*_y/\phi M_{sy}$	2.63	< 1.0		Warning	
ϕM_{rx}	23.15	kNm	0.0%	Okay	
ϕM_{ox}	23.15	kNm	0.0%	Okay	
ϕM_{bx}	23.15	kNm	0.0%	Okay	
ϕM_{ry}	23.15	kNm	263.5%	Warning	
$(M^*_x/\phi M_{bx})^{1.4} + (M^*_y/\phi M_{ry})^{1.4}$	3.88	< 1.0		Warning	

Combined Shear/Bending				
ϕV_{vrx}	197.1	kN	63.9%	Okay
ϕV_{vry}	0.0	kN	1000.0%	Warning

CHECK Combined Shear/Bending/Torsion

Input cell

GHD CLIENTS | PEOPLE | PERFORMANCE

Client	Brisbane City Council	Job No	4124022	Sheet	28
Project	CityCat Floodd Condition Design Check-GB1-C2	Calcs [redacted]		Date	6/05/2011
Subject	Capacity 100x100x6 SHS	Checked [redacted]		Date	11/05/2011

9.2.2 Guide Bracket at Pontoon River Piles

A model has been setup to obtain the worst condition for the guide brackets 3, 4, 5 and 6 as shown in the figure 11 (Case 3).

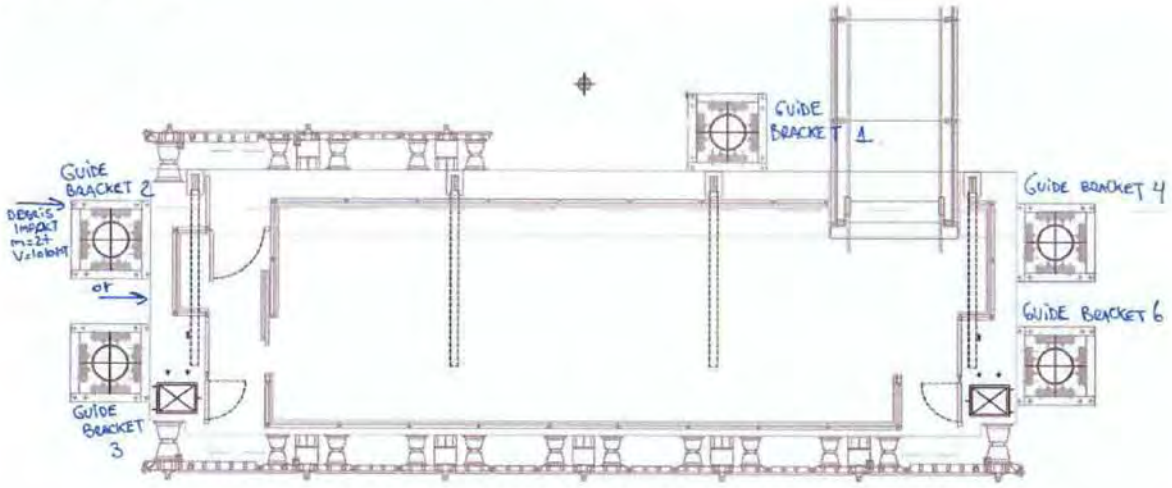

Figure 11:Guide Brackets 2, 3, 4 and 5 (Case 3)

Standard Section Capacity - 250/350 Grade Closed Sections

Steel Properties				**Beam Properties**			Date	12/05/11					
E	200	GPa		L_{ex}	1.4	m							
G	80	GPa		α_{mx}	1		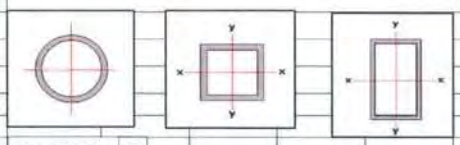						
f_y	350	MPa		L_{ey}	1.4	m							
f_u	430	MPa		α_{my}	1								
Section Properties				**Column Properties**									
				L_{ex}	1.4	m	SHS - 350 (1)						
				L_{ey}	1.4	m					M_x^*	48.7	kNm
k_t	1			k_t	1		150 x 6.0 SHS				M_y^*	0.25	kNm
A_{holes}	0	mm^2		α_c	-0.5		Grade	350					
A_g	3330	mm^2					$t_{torsion}$	6	mm		V_x^*	0	kN
A_{nett}	3330	mm^2									V_y^*	0	kN
I_x	11.3	$x10^{-6}$ m^4		I_y	11.3	$x10^{-6}$ m^4							
r_x	58.2	mm		r_y	58.2	mm					N_c^*	18	kN
Z_x	150	$x10^{-6}$ m^3		Z_y	150	$x10^{-6}$ m^3					N_t^*	18	kN
S_x	178	$x10^{-6}$ m^3		S_y	178	$x10^{-6}$ m^3							
Z_{ex}	175	$x10^{-6}$ m^3		Z_{ey}	175	$x10^{-6}$ m^3					T^*	0	kNm
M_{ox}	4093	kNm		M_{oy}	4093	kNm							
I_{wx}	0	$x10^{-9}$ m^6		I_{wy}	0	$x10^{-9}$ m^6							
J	18400	$x10^{-9}$ m^4											
ϕM_{sx}	55.1	kNm	88.3%	Okay		ϕV_{vx}	309	kN	0.0%	Okay			
ϕM_{bx}	55.1	kNm	88.3%	Okay		ϕV_{vy}	309	kN	0.0%	Okay			
ϕM_{sy}	55.1	kNm	0.5%	Okay		ϕN_s	1049	kN	1.7%	Okay			
ϕM_{by}	55.1	kNm	0.5%	Okay		ϕN_{cx}	1019	kN	1.8%	Okay			
						ϕN_{cy}	1019	kN	1.8%	Okay			
ϕT	579.6	kNm	0.0%	Okay		ϕN_t	1049	kN	1.7%	Okay			
Compression - Section Capacities													
		ϕM_{rx}	54.18	kNm		89.9%	Okay						
		ϕM_{ry}	54.18	kNm		0.5%	Okay						
$N^*_c/\phi N_s + M^*_x/\phi M_{sx} + M^*_y/\phi M_{sy}$			0.91	< 1.0			Okay						
		ϕM_{ox}	54.15	kNm		89.9%	Okay						
		ϕM_{cx}	54.15	kNm		89.9%	Okay						
		ϕM_{cx}	54.15	kNm		89.9%	Okay						
		ϕM_{oy}	54.15	kNm		0.5%	Okay						
$(M^*_x/\phi M_{cx})^{1.4} + (M^*_y/\phi M_{cy})^{1.4}$			0.86	< 1.0			Okay						
Tension - Section Capacities													
		ϕM_{rx}	54.18	kNm		89.9%	Okay						
		ϕM_{ry}	54.18	kNm		0.5%	Okay						
$N^*_t/\phi N_t + M^*_x/\phi M_{sx} + M^*_y/\phi M_{sy}$			0.91	< 1.0			Okay						
		ϕM_{ox}	54.18	kNm		89.9%	Okay						
		ϕM_{ox}	54.18	kNm		89.9%	Okay						
		ϕM_{oy}	54.18	kNm		89.9%	Okay						
		ϕM_{oy}	54.18	kNm		0.5%	Okay						
$(M^*_x/\phi M_{tx})^{1.4} + (M^*_y/\phi M_{ty})^{1.4}$			0.86	< 1.0			Okay						
Combined Shear/Bending													
		ϕV_{vmx}	243.1	kN		0.0%	Okay						
		ϕV_{vmy}	309.1	kN		0.0%	Okay						
CHECK Combined Shear/Bending/Torsion													

Input cell

GHD CLIENTS | PEOPLE | PERFORMANCE

Client:	Brisbane City Council	Job No:	4124022	Sheet:	30
Project:	CityCat Flood Condition Design Check	Calcs:	[redacted]	Date:	6/05/2011
Subject:	Capacity 150x150x6 SHS	Checked:	[redacted]	Date:	11/05/2011

Standard Section Capacity - 250/350 Grade Closed Sections

Steel Properties			Beam Properties			Date	12/05/11				
E	200	GPa	L_{ex}	1.54	m						
G	80	GPa	α_{mx}	1							
f_y	350	MPa	L_{ey}	1.54	m						
f_u	430	MPa	α_{my}	1							
Section Properties			**Column Properties**								
			L_{ex}	1.54	m	SHS - 350 (2)					
			L_{ey}	1.54	m					M_x^*	0.26 kNm
k_f	1		k_f	1		100 x 6.0 SHS				M_y^*	0.1 kNm
A_{holes}	0	mm^2	α_b	-0.5		Grade	350				
A_g	2130	mm^2				$t_{transition}$	6 mm			V_x^*	0.3 kN
A_{net}	2130	mm^2								V_y^*	0.05 kN
I_x	3.04	$x10^{-6}$ m^4	I_y	3.04	$x10^{-6}$ m^4						
r_x	37.7	mm	r_y	37.7	mm					N_c^*	57.1 kN
Z_x	60.7	$x10^{-6}$ m^3	Z_y	60.7	$x10^{-6}$ m^3					N_t^*	57.1 kN
S_x	73.5	$x10^{-6}$ m^3	S_y	73.5	$x10^{-6}$ m^3						
Z_{ex}	73.5	$x10^{-6}$ m^3	Z_{ey}	73.5	$x10^{-6}$ m^3					T^*	0 kNm
M_{ox}	1021	kNm	M_{oy}	1021	kNm						
I_w	0	$x10^{-9}$ m^6	I_w	0	$x10^{-9}$ m^6						
J	5150	$x10^{-9}$ m^4									

ϕM_{sx}	23.2	kNm	1.1%	Okay	ϕV_{vx}	197	kN	0.2%	Okay	
ϕM_{bx}	23.2	kNm	1.1%	Okay	ϕV_{vy}	197	kN	0.0%	Okay	
ϕM_{sy}	23.2	kNm	0.4%	Okay	ϕN_s	671	kN	8.5%	Okay	
ϕM_{by}	23.2	kNm	0.4%	Okay	ϕN_{cx}	612	kN	9.3%	Okay	
					ϕN_{cy}	612	kN	9.3%	Okay	
ϕT	162.2	kNm	0.0%	Okay	ϕN_t	671	kN	8.5%	Okay	

Compression - Section Capacities					
ϕM_{rx}	21.18	kNm		1.2%	Okay
ϕM_{ry}	21.18	kNm		0.5%	Okay
$N^*_c/\phi N_s + M^*_x/\phi M_{sx} + M^*_y/\phi M_{sy}$	0.10	< 1.0			Okay
ϕM_{sx}	20.99	kNm		1.2%	Okay
ϕM_{bx}	20.99	kNm		1.2%	Okay
ϕM_{cx}	20.99	kNm		1.2%	Okay
ϕM_{sy}	20.99	kNm		0.5%	Okay
$(M^*_x/\phi M_{cx})^{1.4} + (M^*_y/\phi M_{sy})^{1.4}$	0.00	< 1.0			Okay

Tension - Section Capacities					
ϕM_{rx}	21.18	kNm		1.2%	Okay
ϕM_{ry}	21.18	kNm		0.5%	Okay
$N^*_t/\phi N_t + M^*_x/\phi M_{sx} + M^*_y/\phi M_{sy}$	0.10	< 1.0			Okay
ϕM_{rx}	21.18	kNm		1.2%	Okay
ϕM_{bx}	21.18	kNm		1.2%	Okay
ϕM_{ty}	21.18	kNm		1.2%	Okay
ϕM_{ry}	21.18	kNm		0.5%	Okay
$(M^*_x/\phi M_{tx})^{1.4} + (M^*_y/\phi M_{ry})^{1.4}$	0.00	< 1.0			Okay

Combined Shear/Bending					
ϕV_{vmx}	197.1	kN		0.2%	Okay
ϕV_{vmy}	197.1	kN		0.0%	Okay

CHECK Combined Shear/Bending/Torsion

Input cell

GHD CLIENTS | PEOPLE | PERFORMANCE

Client:	Brisbane City Council	Job No	[redacted]4124022	Sheet	31
Project:	CityCat Flood Condition Design Check	Calcs by	[redacted]	Date	6/05/2011
Subject:	Capacity 100x100x6 SHS	Checked by	[redacted]	Date	11/05/2011

Conclusion:

It is noted that the structural elements of guide brackets 2, 3, 4 and 5 are within their design capacities for all cases.

The structural elements of the guide bracket # 1 are overstressed for debris impact.

It is noted that a direct impact (2 ton) on guide bracket is improbable however, if this where the case, It is noted that its failure would not release the pontoon from its position as the remaining guides would mantain in place.

It is noted that the restraining piles have adequate capacity for the extreme loading case however the following must be observed:

1. There appears to be geotechnical failure (soil yield) for the top 2 meters of soil (i.e. the pile actions at these locations exceed the soil capacity). This would mean that the piles are likely to remain in this deformed position post flood events; and

2. The maximum deflection at the top of the pile exceeds the acceptable serviceability limits in AS2195.

9.3 Proposed Pile Protection

The structural analysis for the proposed flood protection's outer pile has been compiled.

9.3.1 Loading

9.3.1.1 Dead load (G)

Dead loads shall be self weight of all the elements.

Concrete density: $\gamma_c := 24kN \cdot m^{-3}$

Steel density: $\gamma_s := 78kN \cdot m^{-3}$

9.3.1.2 Current Load Over Piles (C_1)

Considerations:
- Marine growth (100 mm thk from MHWS to the Sea bed)
- Maximum velocity 10 knot (email 03/05/2011 by Paul O'keefe)
- Assumed triangular distribution for velocity profile vs depth
- C_D is adopted as 1.4 (circular piles - rough, refer AS3962)

$v_{max} := 10knot$

$C_D := 1.4$

$\rho := 1000kg \cdot m^{-3}$

9.3.1.2.a 800 DIA Pile Loading

Nominal diameter of the pile: $D := 800mm$

Marine growth: $f := 100mm$

$$v(z) := v \leftarrow \begin{cases} \frac{v_{max}}{MFL - SB} \cdot z - \frac{SB \cdot v_{max}}{MFL - SB} & \text{if } SB \le z \le MFL \\ 0knot & \text{otherwise} \end{cases}$$

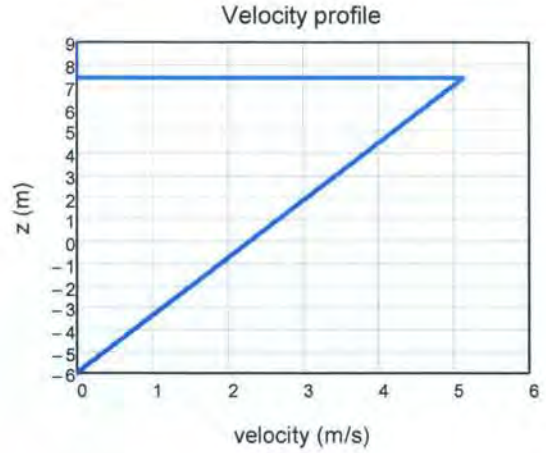

Note: z (to AHD)

Pressure: $p(z) := \frac{1}{2} \cdot \rho \cdot C_D \cdot v(z)^2$

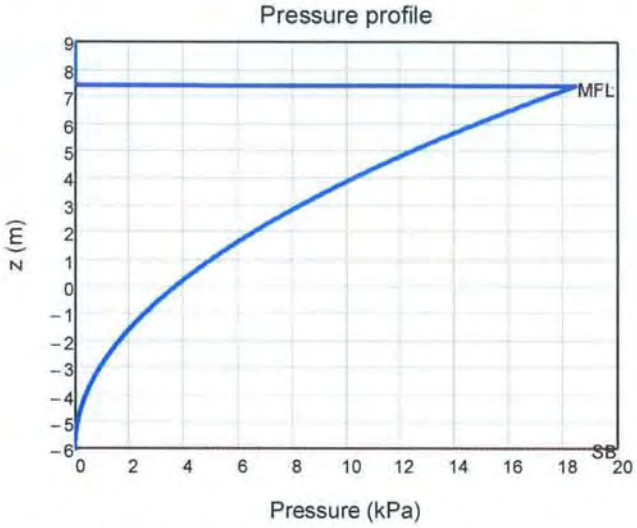

Note: z (to AHD)

Resultant forces due to current:

$$F := \int_{SB}^{MHWS} p(z) \cdot (D + 2 \cdot f)\, dz + \int_{MHWS}^{MFL} p(z) \cdot D\, dz = 68.54 \cdot kN$$

$$M := \int_{SB}^{MHWS} p(z) \cdot (z - SB) \cdot (D + 2 \cdot f)\, dz + \int_{MHWS}^{MFL} p(z) \cdot (z - SB) \cdot D\, dz = 677.54 \cdot kN \cdot m$$

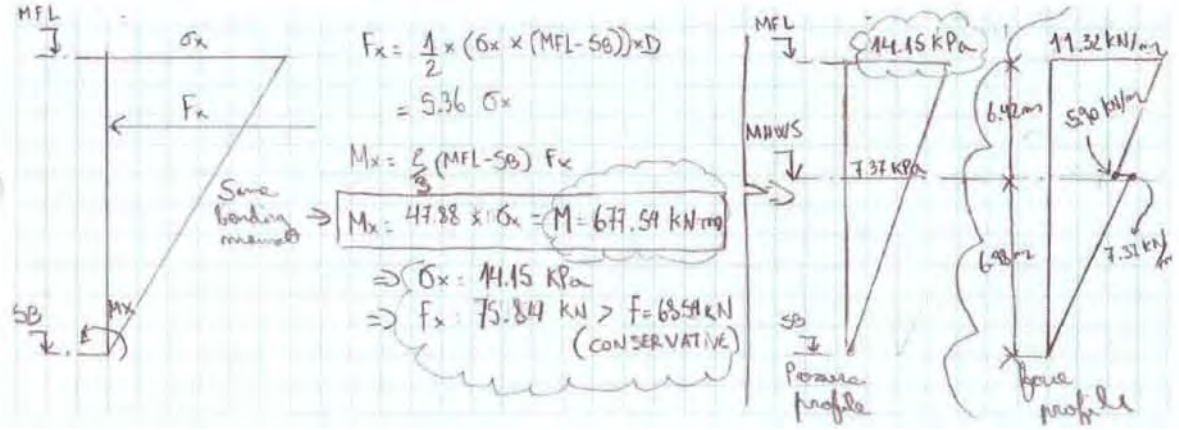

9.3.1.3.b 1200 DIA Pile Loading

Nominal diameter of the pile: D := 1200mm

Adopt velocity profile as shown in 9.3.1.2.a

Pressure: $p(z) := \frac{1}{2} \cdot \rho \cdot C_D \cdot v(z)^2$

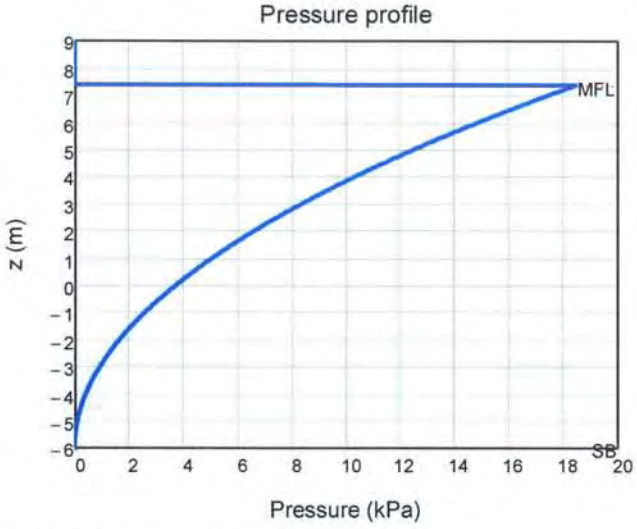

Note: z (to AHD)

Resultant forces due to current:

$$F := \int_{SB}^{MHWS} p(z) \cdot (D + 2 \cdot f)\, dz + \int_{MHWS}^{MFL} p(z) \cdot D\, dz = 101.64 \cdot kN$$

$$M := \int_{SB}^{MHWS} p(z) \cdot (z - SB) \cdot (D + 2 \cdot f)\, dz + \int_{MHWS}^{MFL} p(z) \cdot (z - SB) \cdot D\, dz = 1010.19 \cdot kN \cdot m$$

To simplify the analsys a triangular profile has been used for drag force:

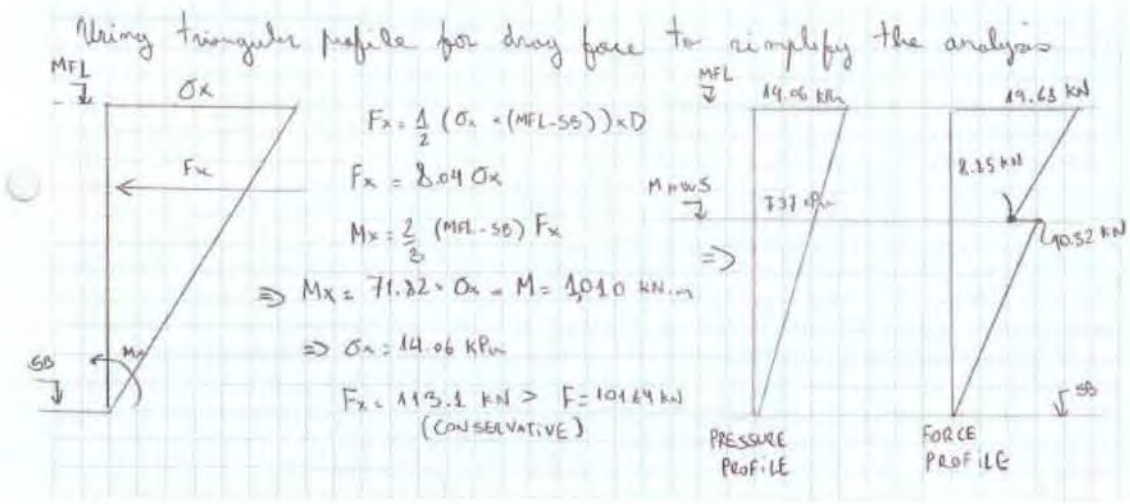

9.3.1.3 Pontoon Impact Load

Asume impact by "run-away" floating pontoon

Pontoon weigth: $m_o := 15ton$ (email 09/05/2011 by Paul O'keefe)

Pontoon velocity: $v := 5m \cdot s^{-1}$ (email 09/05/2011 by Paul O'keefe)

Kinetic energy: $E_k := \frac{1}{2} \cdot m_o \cdot v^2 = 170.1 \cdot kN \cdot m$

Pile stiffness (k) has been calculated for different pile diameters as follows:

Pile ϕ=800 mm, 25 mm thk

$\Delta_{unit1} := 2.39mm$

$k_1 := \frac{1kN}{\Delta_{unit1}} = 418.41 \cdot kN \cdot m^{-1}$

Condition : Kinetic energy = Strain energy $\Delta_1 := \sqrt{\frac{m_o}{k_1}} \cdot v = 901.7 \cdot mm$ $F_1 := k_1 \cdot \Delta_1 = 377.28 \cdot kN$

Pile ϕ=1100 mm, 25 mm thk

$\Delta_{unit2} := 1.11mm$

$k_2 := \frac{1kN}{\Delta_{unit2}} = 900.9 \cdot kN \cdot m^{-1}$

Condition : Kinetic energy = Strain energy $\Delta_2 := \sqrt{\frac{m_o}{k_2}} \cdot v = 614.5 \cdot mm$ $F_2 := k_2 \cdot \Delta_2 = 553.61 \cdot kN$

Pile ϕ=1200 mm, 25 mm thk

$\Delta_{unit3} := 0.9060mm$

$k_3 := \frac{1kN}{\Delta_{unit3}} = 1103.75 \cdot kN \cdot m^{-1}$

Condition : Kinetic energy = Strain energy $\Delta_3 := \sqrt{\frac{m_o}{k_3}} \cdot v = 555.17 \cdot mm$ $F_3 := k_3 \cdot \Delta_3 = 612.77 \cdot kN$

Pile ϕ=1200 mm, 32 mm thk

$\Delta_{unit4} := 0.7589mm$

$k_4 := \frac{1kN}{\Delta_{unit4}} = 1317.7 \cdot kN \cdot m^{-1}$

Condition : Kinetic energy = Strain energy $\Delta_4 := \sqrt{\frac{m_o}{k_4}} \cdot v = 508.11 \cdot mm$ $F_4 := k_4 \cdot \Delta_4 = 669.53 \cdot kN$

9.3.2 Structural model (Single pile - flood protection outer pile)

The structural analysis was carried out using SAP2000 V14.

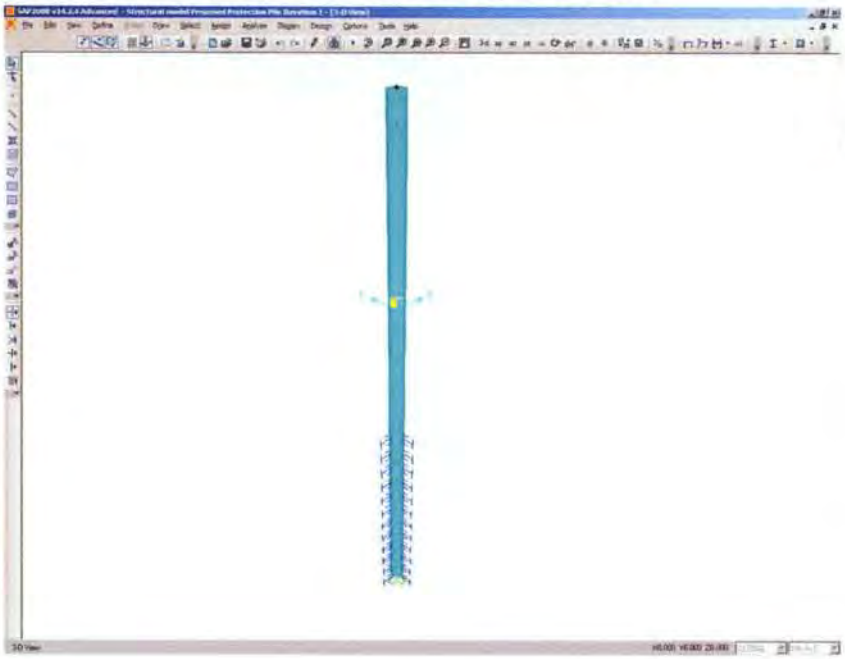

Figure 12: Structural Model Protection Pile



Figure 13: Drag Forces



Figure 12: Pontoon Impact

Ultimate Actions

Bending moment principal axis: $M_{ux} := 7346kN \cdot m$

Bending moment secondary axis: $M_{uy} := 0kN \cdot m$

Shear: $V_u := 1690kN$

Axial Compresion force: $N_{uc} := 150kN$

Axial Tension force: $N_{ut} := 0kN$

9.3.3 Structural Capacity Pile ϕ=800 mm, 25 mm thk

A) Steel Properties

Steel elasticity modulus: $E := 2059000MPa$

Poisson ratio: $\nu := 0.3$

Steel shear modulus: $G := \frac{E}{2 \cdot (1 + \nu)} = 791923 \cdot MPa$

B) Section Properties

Flexible length: $L := 18.5m$

Outside diameter: $OD := 800mm$

Thickness: $t := 25mm$

Inside diameter: $ID := OD - 2 \cdot t = 750 \cdot mm$

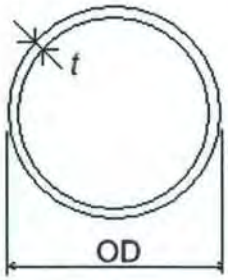

$r_1 := \frac{OD}{2} - \frac{t}{2} = 387.5 \cdot mm$

- Area: $A := \frac{\pi}{4} \cdot \left(OD^2 - ID^2\right) = 94.35 \cdot in^2$
- Weight x meter: $w := A \cdot 7.85tonf \cdot m^{-3} = 478 \cdot kgf \cdot m^{-1}$
- Moment of inertia $I := \frac{\pi}{64} \cdot \left(OD^4 - ID^4\right) = 457464 \cdot cm^4$
- Radius of gyration: $r := \sqrt{\frac{I}{A}} = 27.41 \cdot cm$
- Elastic modulus: $Z := \frac{2 \cdot I}{OD} = 11437 \cdot cm^3$

- Plastic modulus: $S := \frac{A}{\pi \cdot r_1} \cdot \left(2 \cdot r_1^2 + \frac{t^2}{6}\right) = 15021 \cdot cm^3$

- Effective length factor: $k_e := 2.2$

- Torsional factor. $J := \frac{4 \cdot \left[\frac{\pi}{4} \cdot \left(OD - \frac{t}{2}\right)^2\right]^2}{\frac{\pi \cdot \left(OD - \frac{t}{2}\right)}{t}} = 958918 \cdot cm^4$

C) Axial Compression Capacity

C.1 Nominal Section Capacity

Element slenderness: $\lambda_e := \left(\frac{OD}{t}\right) \cdot \left(\frac{f_y}{250MPa}\right) = 44.8$

Yield slenderness: $\lambda_{ey} := 82$ (Table 6.2.4 AS4100-1998)

Effective outside diameter: $d_e := \min\left[OD \cdot \sqrt{\frac{\lambda_{ey}}{\lambda_e}}, OD, OD \cdot \left(\frac{3 \cdot \lambda_{ey}}{\lambda_e}\right)^2\right] = 800 \cdot mm$

Effective area: $A_e := \frac{\pi}{4} \cdot \left[d_e^2 - (d_e - 2 \cdot t)^2\right] = 608.68 \cdot cm^2$

Form factor: $k_f := \frac{A_e}{A} = 1$

Nominal section capacity: $N_s := k_f \cdot A \cdot f_y = 21304 \cdot kN$

$\phi N_s := 0.9 \cdot N_s = 19174 \cdot kN$

C.2 Nominal Capacity of a Member of Constant Cross-Section

Effective length: $l_e := k_e \cdot L = 40.7 \cdot m$

$\lambda_n := \left(\frac{l_e}{r}\right) \cdot \sqrt{k_f} \sqrt{\frac{f_y}{250MPa}} = 175.66$

$\alpha_a := \frac{2100 \cdot (\lambda_n - 13.5)}{\lambda_n^2 - 15.3 \cdot \lambda_n + 2050} = 11.27$

$\alpha_b := -0.5$ (See table 6.3.1(1) and 6.3.3(2) AS4100-1998)

$\lambda := \lambda_n + \alpha_a \cdot \alpha_b = 170.03$

$\eta := \max[0.00326 \cdot (\lambda - 13.5), 0] = 0.51$

$$\xi := \frac{\left(\frac{\lambda}{90}\right)^2 + 1 + \eta}{2 \cdot \left(\frac{\lambda}{90}\right)^2} = 0.71$$

Member slenderness reduction factor: $\alpha_c := \xi \cdot \left[1 - \sqrt{1 - \left(\frac{90}{\xi \cdot \lambda}\right)^2}\right] = 0.24$

Nominal member capacity: $N_c := \min(\alpha_c \cdot N_s, N_s) = 5028 \cdot kN$

$\boxed{\phi N_c := 0.9 \cdot N_c = 4525 \cdot kN}$

D) Axial Tension Capacity

$\boxed{\phi N_t := 0.9 \cdot A \cdot f_y = 19174 \cdot kN}$

E) Bending Moment Capacity

E.1 Nominal Section Moment Capacity

Section slenderness: $\lambda_s := \left(\frac{OD}{t}\right)\cdot\left(\frac{f_y}{250MPa}\right) = 44.8$

TABLE 5.2 *(continued)*

Plate element type	Longitudinal edges supported	Residual stresses (see Notes)	Plasticity limit (λ_{ep})	Yield limit (λ_{ey})	Deformation limit (λ_{ed})
Circular hollow sections		SR	50	120	—
		HR, CF	50	120	—
		LW	42	120	—
		HW	42	120	—

NOTES:

1 SR—stress relieved
HR—hot-rolled or hot-finished
CF—cold formed
LW—lightly welded longitudinally
HW—heavily welded longitudinally

2 Welded members whose compressive residual stresses are less than 40 MPa may be considered to be lightly welded.

$\lambda_{sp} := 42$

(Table 5.2 AS4100-1998)

$\lambda_{sy} := 120$

"Compact section" if $\lambda_s \le \lambda_{sp}$ = "No compact section"

"No compact section" if $\lambda_{sp} < \lambda_s \le \lambda_{sy}$

"Slender section" otherwise

$$Z_e := \begin{cases} \min(S, 1.5\cdot Z) & \text{if } \lambda_s \le \lambda_{sp} \\ Z + \left[\left(\frac{\lambda_{sy} - \lambda_s}{\lambda_{sy} - \lambda_{sp}}\right)\cdot(\min(S, 1.5\cdot Z) - Z)\right] & \text{if } \lambda_{sp} < \lambda_s \le \lambda_{sy} \\ \min\left[Z\cdot\sqrt{\frac{\lambda_{sy}}{\lambda_s}}, Z\cdot\left(\frac{2\cdot\lambda_{sy}}{\lambda_s}\right)^2\right] & \text{otherwise} \end{cases} = 14892\cdot cm^3$$

Nominal section moment capacity:

$M_{sx} := Z_e\cdot f_y = 5212\cdot kN\cdot m$

$\phi M_{sx} := 0.9\cdot M_{sx} = 4691\cdot kN\cdot m$

$M_{sy} := M_{sx} = 5212\cdot kN\cdot m$

$\phi M_{sy} := 0.9\cdot M_{sy} = 4691\cdot kN\cdot m$

E.2 Nominal Member Moment Capacity

From bending moment diagram you must obtain:

Maximum bending moment in the segment: $M_m := 7346kN \cdot m$

Bending moment at the quarter points of the segment: $M_2 := 6956kN \cdot m$ $M_4 := 2670kN \cdot m$

Bending moment at the midpoint of the segment: $M_3 := 6010kN \cdot m$

Moment factor modification: $\alpha_m := \min\left(2.5, \frac{1.7 \cdot M_m}{\sqrt{M_2^2 + M_3^2 + M_4^2}}\right) = 1.3$

$M_{oa} := \sqrt{\left(\frac{\pi^2 \cdot E \cdot I}{l_e^2}\right) \cdot G \cdot J} = 652821 \cdot kN \cdot m$ (Iw = 0 Refer to clause 5.1.6.4 AS4100-1998)

Slender reduction factor: $\alpha_{sx} := 0.6 \cdot \left[\sqrt{\left(\frac{M_{sx}}{M_{oa}}\right)^2 + 3} - \frac{M_{sx}}{M_{oa}}\right] = 1.03$

$\alpha_{sy} := 0.6 \cdot \left[\sqrt{\left(\frac{M_{sy}}{M_{oa}}\right)^2 + 3} - \frac{M_{sy}}{M_{oa}}\right] = 1.03$

Member capacity segment without full lateral restraint: $\phi M_{bx} := 0.9 \min\left(\alpha_m \cdot \alpha_{sx} \cdot M_{sx}, M_{sx}\right) = 4691 \cdot kN \cdot m$

$\phi M_{by} := 0.9 \min\left(\alpha_m \cdot \alpha_{sy} \cdot M_{sy}, M_{sy}\right) = 4691 \cdot kN \cdot m$

F) Shear Capacity

$\phi V := 0.9 \cdot 0.36 \cdot f_y \cdot A = 6902 \cdot kN$

G) Section Capacity Summary

$$\phi M_{rx} := \phi M_{sx} \cdot \left(1 - \frac{N_{uc}}{\phi N_s}\right) = 4654 \cdot kN \cdot m$$

$$\phi M_{ry} := \phi M_{sy} \cdot \left(1 - \frac{N_{uc}}{\phi N_s}\right) = 4654 \cdot kN \cdot m$$

$$\phi M_{ix} := 0.9 M_{sx} \cdot \left(1 - \frac{N_{uc}}{\phi N_c}\right) = 4536 \cdot kN \cdot m$$

$$\phi M_{iy} := 0.9 M_{sy} \cdot \left(1 - \frac{N_{uc}}{\phi N_c}\right) = 4536 \cdot kN \cdot m$$

$$\phi V_{vm} := \begin{cases} \phi V & \text{if } M_{ux} \le 0.75 \cdot \phi M_{sx} \\ \phi V \cdot \left[2.2 - \left(\frac{M_{ux}}{\phi M_{sx}}\right)\right] & \text{if } 0.75 \cdot \phi M_{sx} \le M_{ux} \le \phi M_{sx} \\ \text{"Overstress bending moment"} & \text{otherwise} \end{cases} = \text{"Overstress bending moment"}$$

	Section capacities:	Member capacities:
Axial compression capacity:	$\phi N_s = 19174 \cdot kN$	$\phi N_c = 4525 \cdot kN$
Axial tension capacity:	$\phi N_t = 19174 \cdot kN$	
Bending moment capacity principal axis:	$\phi M_{sx} = 4691 \cdot kN \cdot m$	$\phi M_{bx} = 4691 \cdot kN \cdot m$
Bending moment capacity secondary axis:	$\phi M_{sy} = 4691 \cdot kN \cdot m$	$\phi M_{by} = 4691 \cdot kN \cdot m$
Shear:	$\phi V = 6902 \cdot kN$	$\phi V_{vm} = \text{"Overstress bending moment"} \cdot kN$
Nominal capacity reduced by axial force principal axis:	$\phi M_{rx} = 4654 \cdot kN \cdot m$	$\phi M_{ix} = 4536 \cdot kN \cdot m$
Nominal capacity reduced by axial force secondary axis:	$\phi M_{ry} = 4654 \cdot kN \cdot m$	$\phi M_{iy} = 4536 \cdot kN \cdot m$

H) Section Capacity Checks

Section capacity:

Compression: "OK" if $N_{uc} < \phi N_s$ = "OK", "NOT OK" otherwise — $\frac{N_{uc}}{\phi N_s} = 0.78\%$

Tension: "OK" if $N_{ut} < \phi N_t$ = "OK", "NOT OK" otherwise — $\frac{N_{ut}}{\phi N_t} = 0\%$

Bending moment principal axis: "OK" if $M_{ux} < \phi M_{sx}$ = "NOT OK", "NOT OK" otherwise — $\frac{M_{ux}}{\phi M_{sx}} = 156.6\%$

Bending moment secondary axis: "OK" if $M_{uy} < \phi M_{sy}$ = "OK", "NOT OK" otherwise — $\frac{M_{uy}}{\phi M_{sy}} = 0\%$

Shear: "OK" if $V_u < \phi V$ = "OK", "NOT OK" otherwise — $\frac{V_u}{\phi V} = 24.5\%$

Bending moment reduced by axial force principal axis: "OK" if $M_{ux} < \phi M_{rx}$ = "NOT OK", "NOT OK" otherwise — $\frac{M_{ux}}{\phi M_{rx}} = 157.8\%$

Bending moment reduced by axial force secondary axis: "OK" if $M_{uy} < \phi M_{ry}$ = "OK", "NOT OK" otherwise — $\frac{M_{uy}}{\phi M_{ry}} = 0\%$

Reduced shear interaction shear - moment: "OK" if $V_u < \phi V_{vm}$ "NOT OK", "NOT OK" otherwise

Member capacity:

Compression: "OK" if $N_{uc} < \phi N_c$ = "OK", "NOT OK" otherwise — $\frac{N_{uc}}{\phi N_c} = 3.3\%$

Bending moment principal axis: "OK" if $M_{ux} < \phi M_{bx}$ = "NOT OK", "NOT OK" otherwise — $\frac{M_{ux}}{\phi M_{bx}} = 156.6\%$

Bending moment secondary axis: "OK" if $M_{uy} < \phi M_{by}$ = "OK", "NOT OK" otherwise — $\frac{M_{uy}}{\phi M_{by}} = 0\%$

Bending moment reduced by axial force principal axis: "OK" if $M_{ux} < \phi M_{ix}$ = "NOT OK", "NOT OK" otherwise — $\frac{M_{ux}}{\phi M_{ix}} = 162\%$

Bending moment reduced by axial force secondary axis: "OK" if $M_{uy} < \phi M_{iy}$ = "OK", "NOT OK" otherwise — $\frac{M_{uy}}{\phi M_{iy}} = 0\%$

Biaxial: "OK" if $\frac{N_{uc}}{\phi N_s} + \frac{M_{ux}}{\phi M_{sx}} + \frac{M_{uy}}{\phi M_{sy}} \le 1$ = "NOT OK", "NOT OK" otherwise — $\frac{N_{uc}}{\phi N_s} + \frac{M_{ux}}{\phi M_{sx}} + \frac{M_{uy}}{\phi M_{sy}} = 157.4\%$

The DIA 800 mm, 25 mm pile thk is overstressed.

Try for different pile diameters:

Pile ϕ=1100 mm, 25 mm thk

Action:		Capacity:
$M_{u1} := 9170kN$	>	$\phi M_{n1} := 8415kN \cdot m$

Pile ϕ=1200 mm, 25 mm thk

Action:		Capacity:
$M_{u2} := 12188kN$	>	$\phi M_{n2} := 10063kN \cdot m$

Pile ϕ=1200 mm, 32 mm thk

Action:		Capacity:
$M_{u2} := 13166kN$	<	$\phi M_{n2} := 13200kN \cdot m$

The complete analysis of this section is carried out in the next chapter.

Ultimate Actions

Bending moment principal axis:	$M_{ux} := 13166kN \cdot m$
Bending moment secondary axis:	$M_{uy} := 0kN \cdot m$
Shear:	$V_u := 3064kN$
Axial Compresion force:	$N_{uc} := 287kN$
Axial Tension force:	$N_{ut} := 0kN$

9.3.4 Check Structural Capacity Pile ϕ=1200 mm, 32 mm thk

A) Steel Properties

Steel elasticity modulus: $E := 2059000MPa$

Poisson ratio: $\nu := 0.3$

Steel shear modulus: $G := \frac{E}{2 \cdot (1 + \nu)} = 791923 \cdot MPa$

B) Section Properties

Flexible length: $L := 18.5m$

Outside diameter: $OD := 1200mm$

Thickness: $t := 32mm$

Inside diameter: $ID := OD - 2 \cdot t = 1136 \cdot mm$

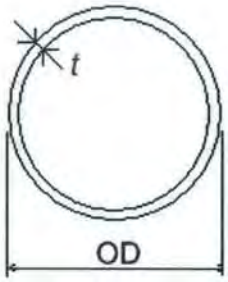

$r_1 := \frac{OD}{2} - \frac{t}{2} = 584 \cdot mm$

- Area: $A := \frac{\pi}{4} \cdot \left(OD^2 - ID^2\right) = 182 \cdot in^2$
- Weight x meter: $w := A \cdot 7.85tonf \cdot m^{-3} = 922 \cdot kgf \cdot m^{-1}$
- Moment of inertia $I := \frac{\pi}{64} \cdot \left(OD^4 - ID^4\right) = 2003846 \cdot cm^4$
- Radius of gyration: $r := \sqrt{\frac{I}{A}} = 41.31 \cdot cm$
- Elastic modulus: $Z := \frac{2 \cdot I}{OD} = 33397 \cdot cm^3$
- Plastic modulus: $S := \frac{A}{\pi \cdot r_1} \cdot \left(2 \cdot r_1^2 + \frac{t^2}{6}\right) = 43666 \cdot cm^3$
- Effective length factor: $k_e := 2.2$
- Torsional factor. $J := \frac{4 \cdot \left[\frac{\pi}{4} \cdot \left(OD - \frac{t}{2}\right)^2\right]^2}{\frac{\pi \cdot \left(OD - \frac{t}{2}\right)}{t}} = 4171526 \cdot cm^4$

C) Axial Compression Capacity

C.1 Nominal Section Capacity

Element slenderness: $\lambda_e := \left(\frac{OD}{t}\right)\cdot\left(\frac{f_y}{250MPa}\right) = 52.5$

Yield slenderness: $\lambda_{ey} := 82$ (Table 6.2.4 AS4100-1998)

Effective outside diameter: $d_e := \min\left[OD\cdot\sqrt{\frac{\lambda_{ey}}{\lambda_e}}, OD, OD\cdot\left(\frac{3\cdot\lambda_{ey}}{\lambda_e}\right)^2\right] = 1200\cdot mm$

Effective area: $A_e := \frac{\pi}{4}\cdot\left[d_e^{\,2} - \left(d_e - 2\cdot t\right)^2\right] = 1174.2\cdot cm^2$

Form factor: $k_f := \frac{A_e}{A} = 1$

Nominal section capacity: $N_s := k_f A\cdot f_y = 41097\cdot kN$

$\phi N_s := 0.9\cdot N_s = 36987\cdot kN$

C.2 Nominal Capacity of a Member of Constant Cross-Section

Effective length: $l_e := k_e\cdot L = 40.7\cdot m$

$\lambda_n := \left(\frac{l_e}{r}\right)\cdot\sqrt{k_f}\sqrt{\frac{f_y}{250MPa}} = 116.57$

$\alpha_a := \frac{2100\cdot\left(\lambda_n - 13.5\right)}{\lambda_n^{\,2} - 15.3\cdot\lambda_n + 2050} = 15.62$

$\alpha_b := -0.5$ (See table 6.3.1(1) and 6.3.3(2) AS4100-1998)

$\lambda := \lambda_n + \alpha_a\cdot\alpha_b = 108.76$

$\eta := \max[0.00326\cdot(\lambda - 13.5), 0] = 0.31$

$\xi := \frac{\left(\frac{\lambda}{90}\right)^2 + 1 + \eta}{2\cdot\left(\frac{\lambda}{90}\right)^2} = 0.95$

Member slenderness reduction factor: $\alpha_c := \xi \cdot \left[1 - \sqrt{1 - \left(\frac{90}{\xi \cdot \lambda}\right)^2}\right] = 0.48$

Nominal member capacity: $N_c := \min(\alpha_c \cdot N_s, N_s) = 19920 \cdot kN$

$\phi N_c := 0.9 \cdot N_c = 17928 \cdot kN$

D) Axial Tension Capacity

$\phi N_t := 0.9 \cdot A \cdot f_y = 36987 \cdot kN$

E) Bending Moment Capacity

E.1 Nominal Section Moment Capacity

Section slenderness: $\lambda_s := \left(\frac{OD}{t}\right)\cdot\left(\frac{f_y}{250MPa}\right) = 52.5$

TABLE 5.2 *(continued)*

Plate element type	Longitudinal edges supported	Residual stresses (see Notes)	Plasticity limit (λ_{ep})	Yield limit (λ_{ey})	Deformation limit (λ_{ed})
Circular hollow sections		SR	50	120	—
		HR, CF	50	120	—
		LW	42	120	—
		HW	42	120	—

NOTES:

1 SR—stress relieved
HR—hot-rolled or hot-finished
CF—cold formed
LW—lightly welded longitudinally
HW—heavily welded longitudinally

2 Welded members whose compressive residual stresses are less than 40 MPa may be considered to be lightly welded.

$\lambda_{sp} := 42$

(Table 5.2 AS4100-1998)

$\lambda_{sy} := 120$

"Compact section" if $\lambda_s \le \lambda_{sp}$ = "No compact section"

"No compact section" if $\lambda_{sp} < \lambda_s \le \lambda_{sy}$

"Slender section" otherwise

$$Z_e := \begin{cases} \min(S, 1.5\cdot Z) & \text{if } \lambda_s \le \lambda_{sp} \\ Z + \left[\left(\frac{\lambda_{sy} - \lambda_s}{\lambda_{sy} - \lambda_{sp}}\right)\cdot(\min(S, 1.5\cdot Z) - Z)\right] & \text{if } \lambda_{sp} < \lambda_s \le \lambda_{sy} \\ \min\left[Z\cdot\sqrt{\frac{\lambda_{sy}}{\lambda_s}}, Z\cdot\left(\frac{2\cdot\lambda_{sy}}{\lambda_s}\right)^2\right] & \text{otherwise} \end{cases} = 42284\cdot cm^3$$

Nominal section moment capacity:

$M_{sx} := Z_e\cdot f_y = 14799\cdot kN\cdot m$

$\phi M_{sx} := 0.9\cdot M_{sx} = 13319\cdot kN\cdot m$

$M_{sy} := M_{sx} = 14799\cdot kN\cdot m$

$\phi M_{sy} := 0.9\cdot M_{sy} = 13319\cdot kN\cdot m$

E.2 Nominal Member Moment Capacity

From bending moment diagram you must obtain:

Maximum bending moment in the segment: $M_m := 13166kN \cdot m$

Bending moment at the quarter points of the segment: $M_2 := 11394kN \cdot m$ $M_4 := 4791kN \cdot m$

Bending moment at the midpoint of the segment: $M_3 := 10671kN \cdot m$

Moment factor modification: $\alpha_m := \min\left(2.5, \frac{1.7 \cdot M_m}{\sqrt{M_2^2 + M_3^2 + M_4^2}}\right) = 1.37$

$M_{oa} := \sqrt{\left(\frac{\pi^2 \cdot E \cdot I}{l_e^2}\right) \cdot G \cdot J} = 2849737 \cdot kN \cdot m$ (Iw = 0 Refer to clause 5.1.6.4 AS4100-1998)

Slender reduction factor: $\alpha_{sx} := 0.6 \cdot \left[\sqrt{\left(\frac{M_{sx}}{M_{oa}}\right)^2 + 3} - \frac{M_{sx}}{M_{oa}}\right] = 1.04$

$\alpha_{sy} := 0.6 \cdot \left[\sqrt{\left(\frac{M_{sy}}{M_{oa}}\right)^2 + 3} - \frac{M_{sy}}{M_{oa}}\right] = 1.04$

Member capacity segment without full lateral restraint: $\phi M_{bx} := 0.9 \min\left(\alpha_m \cdot \alpha_{sx} \cdot M_{sx}, M_{sx}\right) = 13319 \cdot kN \cdot m$

$\phi M_{by} := 0.9 \min\left(\alpha_m \cdot \alpha_{sy} \cdot M_{sy}, M_{sy}\right) = 13319 \cdot kN \cdot m$

F) Shear Capacity

$\phi V := 0.9 \cdot 0.36 \cdot f_y \cdot A = 13315 \cdot kN$

G) Section Capacity Summary

$$\phi M_{rx} := \phi M_{sx}\cdot\left(1-\frac{N_{uc}}{\phi N_s}\right) = 13216\cdot kN\cdot m$$

$$\phi M_{ry} := \phi M_{sy}\cdot\left(1-\frac{N_{uc}}{\phi N_s}\right) = 13216\cdot kN\cdot m$$

$$\phi M_{ix} := 0.9M_{sx}\cdot\left(1-\frac{N_{uc}}{\phi N_c}\right) = 13106\cdot kN\cdot m$$

$$\phi M_{iy} := 0.9M_{sy}\cdot\left(1-\frac{N_{uc}}{\phi N_c}\right) = 13106\cdot kN\cdot m$$

$$\phi V_{vm} := \begin{cases} \phi V \text{ if } M_{ux} \le 0.75\cdot\phi M_{sx} \\ \phi V\cdot\left[2.2-\left(\frac{M_{ux}}{\phi M_{sx}}\right)\right] \text{ if } 0.75\cdot\phi M_{sx} \le M_{ux} \le \phi M_{sx} \\ \text{"Overstress bending moment" otherwise} \end{cases} = 16132\cdot kN$$

	Section capacities:	Member capacities:
Axial compression capacity:	$\phi N_s = 36987\cdot kN$	$\phi N_c = 17928\cdot kN$
Axial tension capacity:	$\phi N_t = 36987\cdot kN$	
Bending moment capacity principal axis:	$\phi M_{sx} = 13319\cdot kN\cdot m$	$\phi M_{bx} = 13319\cdot kN\cdot m$
Bending moment capacity secondary axis:	$\phi M_{sy} = 13319\cdot kN\cdot m$	$\phi M_{by} = 13319\cdot kN\cdot m$
Shear:	$\phi V = 13315\cdot kN$	$\phi V_{vm} = 16132\cdot kN$
Nominal capacity reduced by axial force principal axis:	$\phi M_{rx} = 13216\cdot kN\cdot m$	$\phi M_{ix} = 13106\cdot kN\cdot m$
Nominal capacity reduced by axial force secondary axis:	$\phi M_{ry} = 13216\cdot kN\cdot m$	$\phi M_{iy} = 13106\cdot kN\cdot m$

H) Section Capacity Checks

Section capacity:

Compression:	"OK" if $N_{uc} < \phi N_s$ = "OK"; "NOT OK" otherwise	$\frac{N_{uc}}{\phi N_s} = 0.78\%$
Tension:	"OK" if $N_{ut} < \phi N_t$ = "OK"; "NOT OK" otherwise	$\frac{N_{ut}}{\phi N_t} = 0\%$
Bending moment principal axis:	"OK" if $M_{ux} < \phi M_{sx}$ = "OK"; "NOT OK" otherwise	$\frac{M_{ux}}{\phi M_{sx}} = 98.8\%$
Bending moment secondary axis:	"OK" if $M_{uy} < \phi M_{sy}$ = "OK"; "NOT OK" otherwise	$\frac{M_{uy}}{\phi M_{sy}} = 0\%$
Shear:	"OK" if $V_u < \phi V$ = "OK"; "NOT OK" otherwise	$\frac{V_u}{\phi V} = 23\%$
Bending moment reduced by axial force principal axis:	"OK" if $M_{ux} < \phi M_{rx}$ = "OK"; "NOT OK" otherwise	$\frac{M_{ux}}{\phi M_{rx}} = 99.6\%$
Bending moment reduced by axial force secondary axis:	"OK" if $M_{uy} < \phi M_{ry}$ = "OK"; "NOT OK" otherwise	$\frac{M_{uy}}{\phi M_{ry}} = 0\%$
Reduced shear interaction shear - moment:	"OK" if $V_u < \phi V_{vm}$ = "OK"; "NOT OK" otherwise	$\frac{V_u}{\phi V_{vm}} = 19\%$

Member capacity:

Compression:	"OK" if $N_{uc} < \phi N_c$ = "OK"; "NOT OK" otherwise	$\frac{N_{uc}}{\phi N_c} = 1.6\%$
Bending moment principal axis:	"OK" if $M_{ux} < \phi M_{bx}$ = "OK"; "NOT OK" otherwise	$\frac{M_{ux}}{\phi M_{bx}} = 98.8\%$
Bending moment secondary axis:	"OK" if $M_{uy} < \phi M_{by}$ = "OK"; "NOT OK" otherwise	$\frac{M_{uy}}{\phi M_{by}} = 0\%$
Bending moment reduced by axial force principal axis:	"OK" if $M_{ux} < \phi M_{ix}$ = "NOT OK"; "NOT OK" otherwise	$\frac{M_{ux}}{\phi M_{ix}} = 100.5\%$
Bending moment reduced by axial force secondary axis:	"OK" if $M_{uy} < \phi M_{iy}$ = "OK"; "NOT OK" otherwise	$\frac{M_{uy}}{\phi M_{iy}} = 0\%$
Biaxial:	"OK" if $\frac{N_{uc}}{\phi N_s} + \frac{M_{ux}}{\phi M_{sx}} + \frac{M_{uy}}{\phi M_{sy}} \le 1$ = "OK"; "NOT OK" otherwise	$\frac{N_{uc}}{\phi N_s} + \frac{M_{ux}}{\phi M_{sx}} + \frac{M_{uy}}{\phi M_{sy}} = 99.6\%$

The pile of diameter 1200 mm, 32 mm Thk is ok.

9.3.4 Displacement and Soil Reactions

Displacement and soil reaction are as show in figures 13 and 14 respectively:

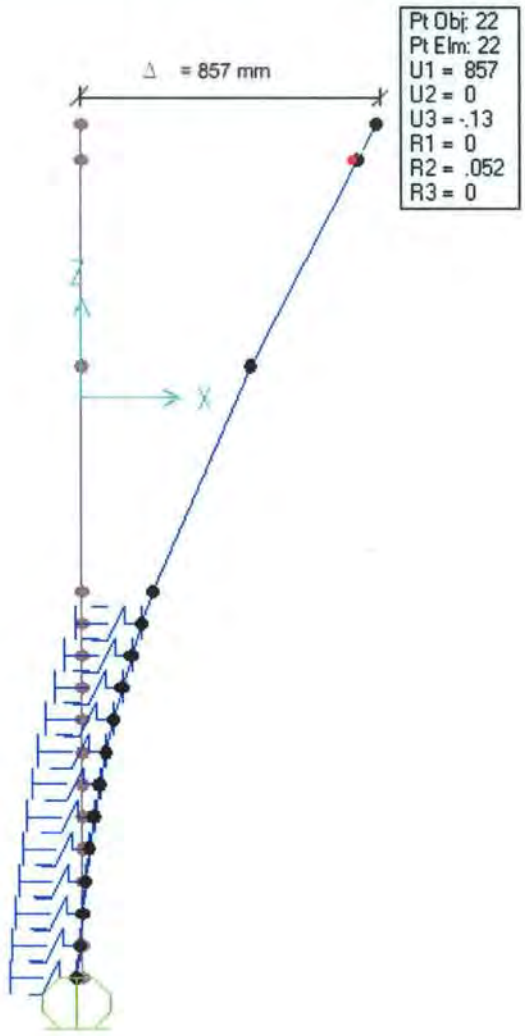

Figure 13: Protected Pile Displacement

The maximum displacement for serviceability combinations is 857 mm, which is 6.5 % H, where H is the flexible length of the pile.

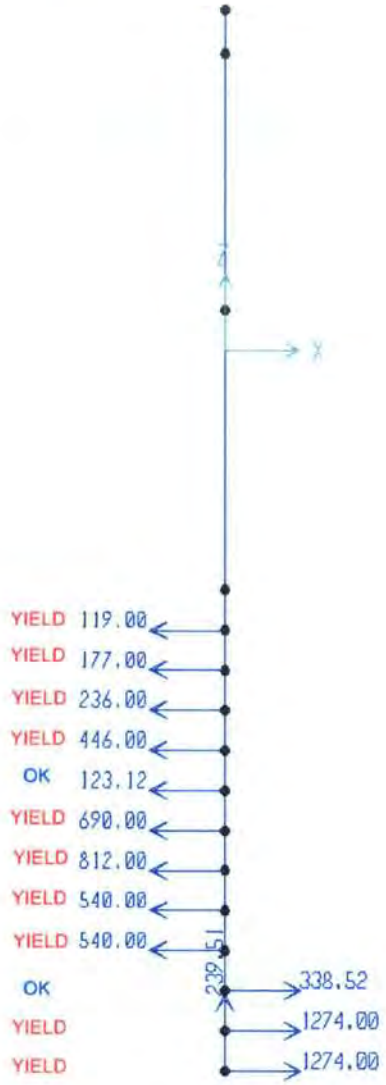

Figure 14: Soil Reactions

Note that almost all the spring has reached the capped capacity, therefore a permanent rotation is expected for the pile.

9.3.5 Conclusions

The suggested pile (800 dia) fails in bending. Soil also fails (through plastic deformation). Bigger 1200 dia pile ok in bending but excessive rotation encountered suggest a need for **greater embedment.**

Appendix B

Montages

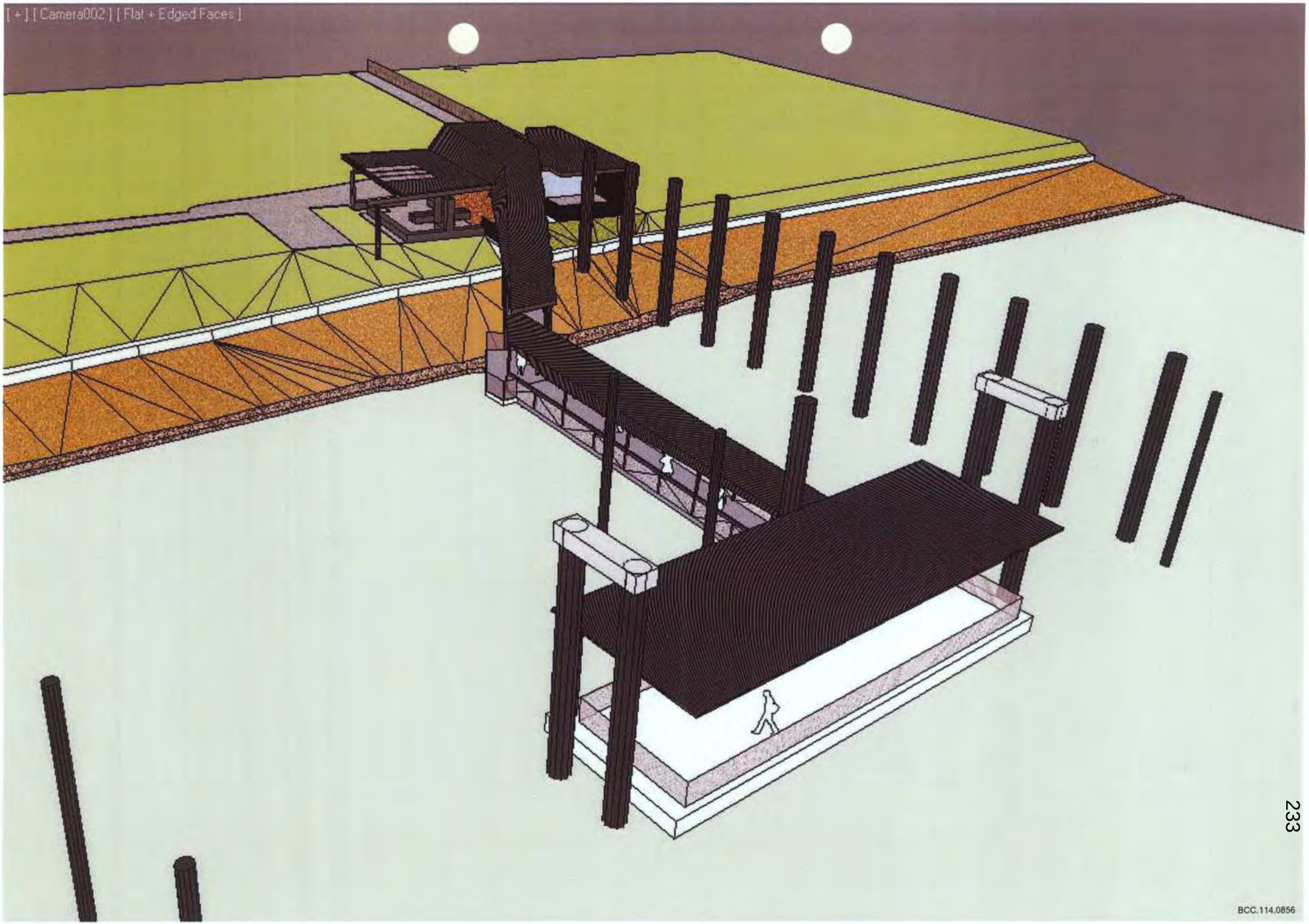
[+] [Camera002] [Flat + Edged Faces]
BCC.114.0856

BCC, 114.0858

GHD

201 Charlotte Street Brisbane QLD 4000
GPO Box 668 Brisbane QLD 4001

[redacted]

© GHD 2011

This document is and shall remain the property of GHD. The document may only be used for the purpose for which it was commissioned and in accordance with the Terms of Engagement for the commission. Unauthorised use of this document in any form whatsoever is prohibited.

Document Status

Rev No.	Author	Reviewer		Approved for Issue		
		Name		Name	Signature	Date
0	[redacted]		[redacted]	[redacted]	[redacted]	1/6/11

"ASH-08"

City Strategy & Policy Division
Transport and Infrastructure Branch
Transport Infrastructure

Design Brief

DESIGN BRIEF

BRISBANE CITY COUNCIL

TITLE:

BULIMBA FERRY TERMINAL UPGRADE

REFERENCE:

BULIMBA

DIVISION AND BRANCH:

City Strategy & Policy Division
Transport and Traffic Branch
Transport Infrastructure Unit

Author:	[redacted]
Officer Code:	PETITO
Creation Date:	23-11-2007
Last Updated:	17 January 2008
Document Control Number:	Bulimba
Version:	00
Document Status:	Draft

Control Copy No.: _____

City Strategy & Policy Division
Transport and Infrastructure Branch
Transport Infrastructure

Design Brief

Distribution List

Version	Date Issued	Control Copy No	Name	Officer Code	Position
00	04/01/08		[redacted]	PTI	Principal, Transport Infrastructure
00	04/01/08			SCFO	Senior Coordinator CityCat & River Ferry Operations
00	04/01/08			PPTT	Acting Principal Public Transport

City Strategy & Policy Division
Transport and Infrastructure Branch Design Brief
Transport Infrastructure

TABLE OF CONTENTS

1.0 BACKGROUND 4

2.0 PURPOSE 4

3.0 SCOPE 4

3.1 General 4

4.0 4.0 OBJECTIVES 5

4.1 Strategic Objectives 5
Planned Transport Outcomes and Deliverables *5*
4.2 Project Objectives 5

5.0 DESIGN REQUIREMENTS 6

5.1 General Requirements: 6
5.2 Live Loads 6
5.3 Berthing Load 7
5.4 Environmental Loads 7
5.5 Serviceability Criteria 7
5.6 Piling to Pontoon and Berthing Piles 7
5.7 Pontoon 8
5.8 Gangways 10
5.9 Lighting 10
5.10 Accessibility 11
5.11 Safety and Security Features 11
5.12 Environmental Issues 11
5.13 Waiting Area 11
5.14 Information and Signs 12
5.15 Electrical 12
5.16 Landscaping 12
5.17 Transport Interfaces 13

6.0 COSTS 13

7.0 DATA AVAILABILITY 13

8.0 OUTCOMES AND METHODOLOGY 13

8.1 Design and data presentation 13
8.2 Approvals 14
8.3 Timing 14
8.4 Consultation 14
8.5 Outcomes/ Deliverable's 14

9.0 MANAGEMENT 14

9.1 Fees 14
9.2 Payment Schedule 15
9.3 Variation of Works 15
9.4 Termination of the Project 15

10.0 PROPOSAL 15

- Necessary and relevant insurances. 15

APPENDIX 1 16

1.0 BACKGROUND

The Bulimba Ferry Terminal is located at the end of Oxford Street in the suburb of Bulimba.

The terminal is one of the busier stops, used by around 7 000 to 8 000 passengers per week. It is anticipated that patronage will continue to grow, given the increase in new developments in this area.

The terminal is currently used for both the CityCat and Monohull (CityFerry) cross-river ferry services. It has been identified as the next highest priority for upgrading.

Due to its proximity to the downstream property boundary, CityCats can only load/unload using the front starboard gate when facing downstream and the back port gate when facing upstream which is inconsistent with other CityCat terminals.

The terminal comprises a heritage-listed waiting shelter/pavilion, timber jetty, timber gangway and concrete pontoon. The piles are a mixture of concrete and steel and concrete and timber, all of which are considered not suitable for the upgraded facility. The pavilion and the remnants of the concrete vehicular ferry landing ramp (adjacent to the existing waiting shelter) are considered to have a *considerable* level of cultural heritage significance and are listed on the EPA's heritage register and therefore the project requires EPA and town planning approvals and impact assessment.

As the major part of the structure is to be located over water, approval from the Harbour Master (QT) and the Department of Natural Resources and Water (DNRW) will need to be gained.

It is proposed that all design works be undertaken in consultation with the relevant planning authorities (via City Design) in order to facilitate and optimize the approvals process.

2.0 PURPOSE

The purpose of the project is to:

- upgrade the Bulimba ferry terminal to make it DDA-compliant (including improving the gradient of the gangway/s);
- accommodate the anticipated increase in passenger demand (including increased waiting area and sheltered gangway and pontoon);
- provide a pontoon further upstream than its current location so that it can be accessed by either the fore or aft CityCat gates when the vessel is facing either upstream or downstream;
- provide the opportunity to moor one Monohull ferry as well as one or two CityCats overnight;
- provide 1 to 2 crew car parks at or near the ferry terminal;
- provide a Cultural Management Plan; and
- maintain ferry services and assure passenger safety during the construction of the new ferry terminal.

3.0 SCOPE

3.1 General

The proposed works are for the design of a pontoon and gangway system and associated works for the upgraded passenger ferry terminal facility at Oxford Street, in Bulimba.

The Design Consultant shall prepare detailed final construction drawings, specifications and engineering certification suitable to obtain approval of Prescribed Tidal Works and Marine Plant

Permits or any other approvals required by the State or Local Government Authorities including Integrated Planning Act, Coastal Protection and Management Act, and Integrated Development Assessment Scheme. The Contractor shall comply with all EPA requirements.

Lodgement for all necessary approvals shall be the responsibility of the Council. However, due to the nature and complexity of the approvals process, it is expected that the Consultant will determine the design outcomes in consultation with the relevant approval authorities, the Transport & Traffic Branch (Transport Infrastructure Unit), and the relevant internal and/or external Planning and Heritage Authorities.

4.0 OBJECTIVES

4.1 Strategic Objectives

Planned Transport Outcomes and Deliverables

The project contributes to the strategic objectives outlined in the DraftTransport Plan for Brisbane 2006 – 2026 as detailed below:

Strategic Objective 1 – Quality Public Transport

Outcome: Public transport is the preferred mode of travel to the city's major centres. It provides a high level of access to all facilities and services in Brisbane, reducing the need to use a car.

Deliverable: New and upgraded ferry terminals will build on the success of the CityCats. A continuing program of upgrades to existing ferry terminals is proposed to safely cater for increasing passenger demand through to 2026.

4.2 Project Objectives

The primary objective of this project is the cost-efficient and timely delivery of a ferry terminal that is:

- Safe and accessible (including DDA compliance)
- CityCat- and CityFerry-capable;
- Sympathetic to the environment and protects the heritage value of the existing pavilion and vehicular ferry ramp;
- Operationally efficient;
- Convenient to use;
- Accessible for passengers, masters and maintenance crews;
- Economical to maintain;
- Further upstream to enable normal berthing procedures; and
- Able to be constructed in the minimum possible timeframe.

5.0 DESIGN REQUIREMENTS

The principal requirements are as follows:

5.1 General Requirements:

The pontoon and major components shall have a minimum design life of 50 years. All components shall be designed for low maintenance and to remain in a reasonable condition for the life of the pontoon as well as considering 'whole of life costs'. The system and components shall be suitable for the specified design criteria.

The general design criteria are:

- To be in accordance with AS4997 "Guidelines for the design of maritime structures" and AS3962: 2001
- Be suitable for all vessels up to 25 T.D.W.
- To have 900mm minimum freeboard unloaded
- The access to the structure shall consist of an aluminium gangway supported on-shore by a concrete foundation with the outer end seated on the pontoon.
- The pontoon and gangway shall have a non slip surface free from longitudinal joints.
- The nominal size, and extent are to be designed to conform to all DDA and relevant Australian codes and requirements of relevant Authorities.
- The design is to be consistent with the objectives for the project listed above.
- It must allow for efficient management of vessel movement. The design must take into account issues identified by Council's ferry operator.
- The design must be appropriate for normal peak and neap tides and address the effects of 1 in 100 year flood levels and the associated current velocity on floating structures. Detailed flood/tidal river current flow analysis will need to be carried out.
- The articulated section of the gangway shall not prevent the pontoon rising during a storm event up to Q100 [3.4m AHD].
- Selection of design and materials should be based on "whole-of-life" costs.

5.2 Live Loads

Minimum Live Load:

- 5kPa Structural
- 3 kPa Stability
- 4.5 kN concentrated load
- Comply with EPA "Operational Policy – Building and Engineering Standards for Tidal Works"

5.3 Berthing Load

The pontoon and its components need to be designed for the berthing loads arising from a 25t CityCat vessel striking the structure at 15 degrees at a velocity of 0.5m/sec.

5.4 Environmental Loads

The pontoon shall be designed for the following environmental conditions:

Wind Waves: To be estimated and justified by the Designer (Consultant)

Waves from Vessels: All components of the system shall be designed for the largest waves expected to be produced by vessels using the stretch of the river during the life of the structure, but the design waves shall be no less than 0.6m with periods ranging from 2-4 seconds.

Current Loads: The pontoon system will be designed to the water levels, velocities and debris build up for a Q100 flood. The design flood height and velocity for a Q100 flood at this location is to be in accordance with Q100 for the Hamilton/Bulimba reach of the river.

The pontoon is required to stay attached to the pile during this event, but a suitable tethering system should be detailed to retain the pontoon and gangway (if required) on-site should this event (and the height of the piles) be exceeded.

Tidal Levels: The pontoon is required to be useable throughout all ranges of tidal levels which should be calculated in accordance with Q100 for Hamilton / Bulimba reach of the river.

Wind: The ultimate limit state wind shall be taken as 51.3 m/s (AS 1170.2, R=500, $M_{(z, cat)} = 0.9$). The design shall account for 27m x 7m beam vessel in any position along the pontoon. The vessel wind area is to be in accordance with AS3962 Table 4.4.

5.5 Serviceability Criteria

The pontoon shall be designed for the following serviceability criteria:

Acceleration: The pontoon shall be designed to have a maximum lateral acceleration at the commuter centre of gravity of $A_h < 2.5 m/s^2$.

Surface: The pontoon surface shall have a non slip concrete surface. The surface shall be Wet Pendulum Test Class V to AS/NZS 4586, Table 2.

Articulation: The pontoon system should be designed so that the pontoon remains on the piles up to and including a Q100 event. The RL of the top of the pile, not including the pile cap shall be such that it is 1.0m higher than the Q100 event. The design should also allow for all components of the system to be retained at the site by way of an anchor system designed for all events up to and including the Q100 level. The gangway connection at the shore abutment shall allow for the raising of the pontoon above the level of the abutment with no permanent damage to all components during flood events.

Vandalism: The pontoon, piles and components shall be designed to be resistant to vandalism.

5.6 Piling to Pontoon and Berthing Piles

- Provide piles consistent with the design and the ferry operational requirements of the terminal;
- Location, number and impact capacity of piles are to be determined based on consultations with Council and Council's ferry contractor, MetroLink Queensland and in accordance with the relevant Australian codes;

- Provide piles configured to enable safe docking of a 12-metre cross-river ferry and 25-metre, 20-tonne CityCats (high-speed, low-wash catamarans), and overnight mooring of one 12-metre ferry and 1 or 2 CityCats.
- Maintenance of the wearing components of the piles is not to interrupt ferry operations and to be designed to minimise maintenance;
- Design moveable elements on the piles that minimise nuisance noise to surrounding properties.
- Allowance for cathodic protection for steel piles (if applicable).

Materials: Concrete filled steel piles with High Density polyethylene sheathing are to be used. All piles shall have suitable PVC, Polyethylene or GRP pile caps.

The concrete filling shall be tremmied to the bottom of the closed pile section and adequate vibration provided to ensure sound dense concrete. The high-density polyethylene sheathing shall penetrate into the riverbed for a minimum distance of two (2) metres to ensure a watertight seal.

Location and Clearance: Restraining piles shall be located outside the pontoon area and are to be located along the front and end faces of the pontoons.

Pile numbers and location shown on the Drawing No CCT-D01 are schematic only. The responsibility for the pile design including location and number restraining piles, correct levelling and setting out of the piles to suit the pontoon system shall rest with the Designer (Consultant). For the pontoon restraining piles, the finished pile position and rake of the piles shall be such that the operation of the restraint brackets is not impaired over tidal range levels.

All piles shall be driven, bored or jetted into final position in the locations and within the nominated tolerances.

5.7 Pontoon

- Design, ballasting and fixing of the pontoon to allow vertical movement, to control movement in the horizontal plane due to waves and tidal flow, and to minimise eddying;
- Design to be based on normal peak tides and 100-year flood level and associated current velocity;
- Provide ready, watertight, internal access for maintenance;
- Provide for easy removal of the pontoon and gangway for maintenance;
- Provide berthing bollards on the pontoon that allow safe tie-off at all times (without assistance from engine);
- In the event of the pontoon sinking, provide for the ability for the pontoon to be retrieved;
- Provide for day-to-day maintenance so as to not interrupt ferry operations;
- Design moveable elements of the pontoon, gangway and walkway to minimise nuisance noise to surrounding properties;
- Provide potable water outlet for maintenance purposes of both facility and ferries
- Provide cover and lighting for boarding and alighting passengers.

The pontoon shall be constructed from a concrete fully or partially encased polystyrene float. The polystyrene shall be grade S.L. expended polystyrene foam. The float shall have a concrete deck

minimum 100mm thick. If the pontoon is fully concrete encased, the bottom and sides shall have a minimum thickness of 65mm. If the pontoon is partially encased with concrete, the side encasement shall be minimum 70mm thick to 300mm below Dead Load waterline and encased with HDPE 1.5mm thick below concrete encasement. All reinforcement shall be stainless steel. The pontoons may be of segmental construction suitably tied together to form a rigid surface.

All concrete work shall comply with the requirements of AS4997 and AS3962:2001 and concrete cover shall be designed for exposure classification "C" (AS3600).

Pontoon segments: The joints between the pontoon segments shall be as follows:

- Maximum gap 10mm

Tolerance: The pontoon shall be manufactured to the following dimensional tolerances:

- Width and height +/- 5mm
- Out of square +/- 5mm

Restraint: The pontoons shall be restrained by the use of HDPE rubbing blocks in grade 316 stainless steel brackets, around the pontoon piles. The use of aluminium, in lieu of grade 316 stainless steel, will not be accepted.

Secondary Restraint: The pontoons shall be fitted with flood restraint chain(s) with a capacity to prevent the pontoon from being washed away during flood events greater than Q100 flood event.

Mooring Cleats: Aluminium or stainless steel mooring cleats shall be fitted to the pontoon at a maximum of 3 metre centres.

Uniform Displacement: The pontoon shall sit level in the water with uniform freeboard on all sides when loaded by the gangway dead load at mid tide.

Fixing: All bolts shall be Grade 316 (UNS S31600) A4-70. Nuts shall be duplex 2205 grade (UNS S31803). Washers shall be 316 (UNS S31600), electropolished or passivated.

Nuts and bolts shall comply with ISO 3506 identifications or, if not so marked, shall be provided with mill or NATA certified test result confirming grade strength.

Bolts shall have rolled threads. The nuts and washers shall be electropolished or passivated in nitric acid.

Bolts shall be tightened to the manufacturer's recommended torque using a torque wrench. Nuts shall be lubricated with an anti-seize, nickel based lubricant subject to the approval of the superintendent.

Handling of stainless steel: Stainless steel material should not be stored with carbon steel. Tools used for carbon steel shall not be used to fabricate or assemble stainless steel components.

Fenders: Both sides of the berthing pontoon (other than the ends shall have a fender system suitable to protect the pontoon and boats from damage over all tidal conditions and wave action. Fenders shall be of either rubber or fibre composite material. Timber fenders will not be accepted.

The gangway shall land on the pontoon in a recess such that the gangway finishes level with the pontoon deck. A stainless steel or aluminium cover plate shall be provided to cover the gap between the gangway and pontoon.

5.8 Gangways

- Ensure passenger movements are efficient with an emphasis on embarking and disembarking.
- Be DDA compliant for two way access;
- Be of sufficient length for compliance with DDA maximum and minimum grades.
- The gangway should be designed to:
  - Be adjustable to accommodate differing ferry deck heights and to have minimal gap between the pontoon and the vessel;
  - Have minimal independent movement due to wave action;
  - Provide step-free, non-slip walking surfaces with covered flaps at all moving connections;
- The gangways shall be of aluminium construction, shall have handrails 1100 high both sides, and be provided with childproof infill.
- The junctions between the gangways, the headstock and insitu landing and pontoon shall not present a trip hazard.
- The decking shall be Life Long fibre composite decking fixed in accordance with the manufacturer's recommendations.
- The width shall be 1.8m inside handrails
- Provide cover and lighting for boarding and alighting passengers.

5.9 Lighting

The scope of the proposed electrical work at the Bulimba Ferry Terminal is to include the upgrade of all lighting at the facility and shall include the upgrade of the existing power supply. Lighting design is to be in accordance with relevant DDA and relevant Australian standards with preference given to low energy lighting options. The preferred lighting is directed downwards onto the gangway and pontoon. The lamp shall not create a glare nuisance for traffic on the river, or for vessels berthing on the pontoon.

- Lighting levels within the waiting areas and on the walkway and gangway are to be minimum of 200 lux 12 months after the commencement of operations with the glare to be managed so as not to interfere with navigation or adjacent properties;
- Safe lighting levels are to be achieved in all other areas, particularly access to Oxford Street in accordance with the code;
- Provide emergency lighting;
- Provide navigational lighting in accordance with the Regional Harbour Master's requirements;
- Provide light onto piles and to the edge of the pontoon to meet ferry operational needs.

5.10 Accessibility

- Ensure access to the site and all areas of the ferry terminal satisfy Council's accessibility policies and obligations;
- Obtain certification from an independent accredited Consultant that the proposed design does and the completed ferry terminal will meet the appropriate DDA and relevant Australian codes;
- Ensure efficient access for passengers, ferry operator's and maintenance crews
- Ensure passenger and vessel movements are efficient.

5.11 Safety and Security Features

- Passive design is to be primary means of ensuring user safety and ferry terminal security including minimisation of vandalism;
- Provide for safe ferry operations with appropriate approvals given by qualified Workplace Health and Safety officers in the field of Marine Engineering;
- Ensure the site and the ferry terminal are accessible for emergency services.
- Ensure design prohibits unauthorised access to ferries moored at this location overnight.

5.12 Environmental Issues

- Provide tanks to collect rainwater from structures for cleaning/maintenance with mains backup;
- Capture and treatment of runoff from cleaning and maintenance procedures
- Compliance with necessary environmental approvals and permits.
- Consider any noise amelioration measures.
- Design to consider and minimise the effects on riverwalls of day-to-day operations.
- Design should take into consideration the impact of services on neighbouring properties, particularly the property downstream of the terminal.

5.13 Waiting Area

- The existing structure is to be retained in accordance with Cultural Heritage requirements.
- Additional shelter is required for waiting passengers.
- Provide a see-through, aesthetically lightweight structure that is located over water.
- Be environmentally-sympathetic to the surrounding structures.
- Be easy to clean and maintain.
- Be built in vandal-resistant materials.
- Provide passenger cover and shelter from the elements.

- Provide natural ventilation for summer months.
- Provide non-slip, free-draining walk surfaces.
- Provide adequate seating.
- Facilitate litter and debris containment.
- Treatment of rain and cleaning water run-off.
- Install a clock with emergency power backup which is also visible to passengers in the waiting area and when reading the information board and to the ferry master.
- Provide treatment of rain and clearing water runoff to remove litter and debris;
- Provide crowd-control elements which retain waiting passengers within the waiting areas until disembarking passengers have cleared the gangways.

5.14 Information and Signs

- Provide prominent signage showing the name of the ferry terminal, visible day and night, from the land and water;
- Provide static timetable cases for ferry and nearby bus services and operational information, in consultation with Urban Transport and Council's ferry operator, MetroLink Queensland. This design shall be in accordance with the limitations imposed by the conservation plan for the existing pavilion;
- Provide all necessary signs including directional signs, safety signs and locational plans that have some multi-lingual content and meet the needs of the sight-impaired and comply with Australian Standards AS 1428.1 (2001) and AS 1428.2 (1992);
- Provide "no smoking" signs at the entry to the facility mounted over appropriate disposal containers;
- Signs are to be consistent with public transport sign standards. Council's ferry operator, MetroLink, should be consulted in relation to their standard signage rollout.

5.15 Electrical

- Earth all metal structures and provide signage to that effect;
- Provide secure, waterproof power points for maintenance use;
- Provide a control system, to manage navigational and other lighting;
- Laying of segregated communications and data cabling conduits for future installation of electronic ferry arrival and information displays and electronic ticketing machines.

5.16 Landscaping

- Determine opportunities to provide landscaping to enhance the surrounding environment;
- Landscaping is not to diminish passenger safety;
- Provide relevant street/park furniture including garbage bins;

5.17 Transport Interfaces

- Provision of passenger set down facilities at the end of Oxford Street, particularly addressing safety concerns for pedestrians;
- Provide safe and accessible interface of ferry passengers and bikeway users both on and off the facility;
- Provision of 1 to 2 crew car parks at or near the ferry terminal;

6.0 COSTS

- Design costs,
- Services alteration costs (if applicable) and,
- All construction cost estimates for the project.

7.0 DATA AVAILABILITY

It is anticipated that the Brisbane City Council will be able to supply the following information to the Consultant who will be undertaking this study at the pre start meeting.

- Existing Hydrographical information
- Existing Geotechnical Reports
- Existing Bimap information (field confirmation required).

It is anticipated that this information will be made available to the Consultant for information only; the Council does not accept any responsibility for the accuracy or interpretation of the data provided.

Allowance should be made for any other material or investigation required for the design process and should be identified in the Consultant's response to the brief.

8.0 OUTCOMES AND METHODOLOGY

8.1 Design and data presentation

The Design Consultant shall prepare detailed final construction drawings, specifications and engineering certification suitable to obtain approval of a Prescribed Tidal Works and Marine Plant Permits or any other approvals required by the State or Local Government Authorities including Integrated Planning Act, Coastal Protection and Management Act, and Integrated Development Assessment Scheme. The Contractor shall comply with all EPA requirements.

The Design Consultant shall provide lighting to satisfy the requirements of the Harbour Master.

At the conclusion of the work, the final report and all working material will become the property of the Brisbane City Council.

Design Drawings should be prepared in Auto Cad Format.

8.2 Approvals

Lodgement for all necessary approvals shall be the responsibility of the Council. Due to the nature and complexity of the approvals process, it is expected that the Consultant will determine the design outcomes in consultation with the relevant approval authorities, the Transport & Traffic Branch (Transport Infrastructure Unit), and the relevant internal and/or external Planning and Heritage Divisions.

8.3 Timing

- Submission of Design Proposals — 22 January 2008
- Award of Design Contract — 4 February 2008
- Completion of Detailed Design /Documentation — 2 May 2008

The Consultant shall include a detailed program with their proposal.

8.4 Consultation

The Brisbane City Council shall carry out all consultation with external Stakeholders and the public.

8.5 Outcomes/ Deliverable's

The Consultant will be required to submit:

- Construction Drawings, Schedules, Specifications, Certification and reports suitable for inclusion in final tender documentation;
- Construction Cost Estimate

9.0 MANAGEMENT

Contact shall be maintained between the Design Consultant and the Transport & Traffic Branch throughout the course of the design process. It shall be the responsibility of the Consultant to ensure this occurs. Formal progress reports are required on a fortnightly basis and progression past agreed hold points (if any) to be discussed between the Consultant and Transport Infrastructure. It is anticipated that fortnightly progress meetings be scheduled for the duration of the project. The nominated Project Manager in Transport Infrastructure for this project is [redacted]

9.1 Fees

- The Consultant shall, in submitting a proposal to this brief, clearly indicate the cost of all design fees for the delivery of this project.
- Hourly rates of Staff/Resources cost of materials and consumables for additional work as requested.

9.2 Payment Schedule

Payment for carrying out the project is to consist of monthly invoices based on hourly rate expended up to the agreed estimated costs for the study including variations. Any expenditure over the budget has to be approved by the Project Manager.

9.3 Variation of Works

The scope of the project can only be varied upon written agreement between the Consultant and the Principal. Any variations must be approved in writing prior to any financial commitments outside the terms of the Contract/Agreement. All variations will be recorded on a change register held by the Client.

Significant personnel shall not be replaced during the course of the design process without the prior approval of the Principal.

9.4 Termination of the Project

The project may be terminated by mutual agreement between Transport Infrastructure and the Consultant or by Transport Infrastructure with seven days notice in writing.

10.0 PROPOSAL

The proposal shall include:

- An appreciation of the situation and work required;
- A detailed methodology;
- Details of staff including relevant experience to be included on the project and the Project Director;
- The level of involvement and time commitment of each staff member;
- A timetable of activities with critical report dates identified;
- Details of any services, data or other material expected to be supplied by or through the Principal;
- Necessary and relevant insurances.

City Strategy & Policy Division
Transport and Infrastructure Branch
Transport Infrastructure

Design Brief

APPENDIX 1

Preferred Option Layout (indicative only)

CLIENTS | PEOPLE | PERFORMANCE

Brisbane City Council

Report for 3 CityCat Terminals

Design Basis Report

December 2009



INFRASTRUCTURE | MINING & INDUSTRY | DEFENCE | PROPERTY & BUILDINGS | ENVIRONMENT

Contents

1. Project Description 6

1.1 Purpose of this report 8

1.1.1 Information provided by the Client 8

1.2 Site Context of each Terminal 8

1.2.1 Hawthorne 8

1.2.2 Teneriffe 10

1.2.3 Bretts Wharf 12

2. Design Requirements 14

2.1 Council Ferry Terminal Specification 14

2.2 Architectural design 15

2.3 Public Utility and services 15

2.3.1 Hawthorne Ferry Terminal 15

2.3.2 Teneriffe Ferry Terminal 16

2.3.3 Brett's Wharf Ferry Terminal 16

2.4 Overview of BCC Codes and Policies 17

2.4.1 Brisbane City Plan 17

2.4.2 CPTED Guidelines 17

2.5 Disability access 19

2.5.1 Brief description of design issues 20

2.5.2 Ferry Infrastructure, Ferries and the Disability Standard for Accessible Public Transport 2002 20

2.5.3 AS4997/2005 – Guidelines for the design of maritime structures – Section 3.4.3 20

2.5.4 Disability Standard for Accessible Public Transport 2002 (made under subsection 31 (1) of the Disability Discrimination Act 1992 20

2.5.5 Australian Standard – Design for Access and Mobility 1428.1-2001 21

2.5.6 Australian Standard – Design for Access and Mobility 1428.2-1992 22

2.5.7 Australian Standard – Guidelines for design of Marinas 3962 – 2000 22

2.5.8 Brisbane City Council's Ferry Terminal Design Specification 22
2.5.9 Disability Discrimination Act 22

3. Design Codes and References 24
3.1 Design Codes 24
3.2 References 24

4. General Design Criteria 26
4.1 Design Life 26
4.2 Geometry 26
4.3 Climate and Temperature 27
4.4 Datum and Grids 27
4.5 Topography and Bathymetry 27
4.6 Met-Ocean Data 28
4.7 Wind Data 29
4.8 Marine Growth 29
4.9 Design Vessel 29
4.10 Electrical 30
4.10.1 Lighting 30
4.10.2 Power 30
4.10.3 Communications 30
4.11 Pontoon 30
4.12 Gangway 31

5. Marine Structural / Civil Design 32
5.1 General 32
5.2 Loads 32
5.2.1 Dead Loads - Selfweight 32
5.2.2 Live Loads 32
5.2.3 Wave Loads 32
5.2.4 Berthing Loads 33
5.2.5 Mooring Loads 34
5.3 Load Combinations and Factors 34
Load Combinations 34
5.4 Construction Provisions 35
5.4.1 Craneage and Lift Capacity 35

5.5 Materials and Durability 35
5.5.1 Key Durability Issues 35
5.5.2 Cathodic Protection Design Basis 36

6. Construction Materials 37
6.1 Concrete 37
Marine Reinforced Concrete 37
6.2 Structural Steel 38
Structural Steel 38
6.3 Aluminium 38

7. Geotechnical Data 39
7.1 Geotechnical investigation 39
7.2 Ground profiles 39
7.3 Geotechncial design parameters 39
7.4 Foundation options 39
7.5 Design standards 40
7.5.1 Axial capacity 40
7.5.2 Lateral capacity 40

8. Heritage Considerations – Hawthorne Ferry Terminal 41
8.1 Significance 41
8.2 Heritage Design Principles 41
8.2.1 Curtilage 41
8.2.2 Location 41
8.2.3 Setting 41
8.2.4 Design 41
8.3 Proposed Design Options 42
8.4 Recommendations 42

Table Index

Table 1 BCC Design Compliance 14
Table 2 CPTED Design Compliance 18
Table 3 Concept Stage Durability Summary 35
Table 4 Proposed Design Options 42

Figure Index

Figure 1	Brisbane River Site Plan showing terminal locations	7
Figure 2	Hawthorne Terminal Site Analysis	9
Figure 3	Teneriffe Terminal Site Analysis	11
Figure 4	Bretts Wharf Terminal Site Analysis	13

Appendices

A Brisbane City Council Site Concept Plans

B Table of Information Provided by the Client

C BCC – Ferry Terminal Design Specification

D Approvals Register

E Brisbane City Council Assessment of Disability Access consideration

1. Project Description

The Brisbane City Council has commissioned GHD to provide design consultancy services for the design and documentation of 3 CityCat terminals in the Brisbane River located at:

- Hawthorne
- Teneriffe and
- Bretts Wharf

The Council has provided the GHD Team with site concept plans previously developed by others, which are located at Appendix A. These plans indicate:

For Hawthorne:

That an upgraded terminal is to be provided for, including retention and continuing use of the existing heritage listed heritage pavilion, a new waiting area, gangway and pontoon. The waiting area is to be of a substantial size, since the Hawthorne Terminal experiences high patronage demand in peak periods.

For Teneriffe:

The location at the eastern end of Commercial Road, is currently utilised only for a cross river ferry. The existing cross-river ferry gangway and pontoon are proposed to be retained for future recreation purposes (river viewing, fishing), whilst a CityCat terminal is constructed immediately upstream. The Teneriffe terminal is therefore a new CityCat terminal, and its' proposed direct interface with the *CityGlider* high frequency bus service which terminates at this location on Commercial Road. This direct interface provides one of the few direct interchange opportunities for ferry services throughout the network.

For Bretts Wharf:

An existing CityCat Terminal is located approximately 280 metres upstream of the proposed site for the new terminal shown on Council's concept plans. The new CityCat terminal interfaces with a development site at 455 Kingsford Smith Drive, which will provide direct pedestrian connectivity to Racecourse Road at Hamilton.

Council has indicated that in commissioning 3 terminal designs concurrently, GHD's scope will include the standardisation of design elements, particularly in terms of the detailing of the terminals, whilst each designs will be appropriately fitted to the conditions of the respective sites.

Figure 1 Brisbane River Site Plan showing terminal locations

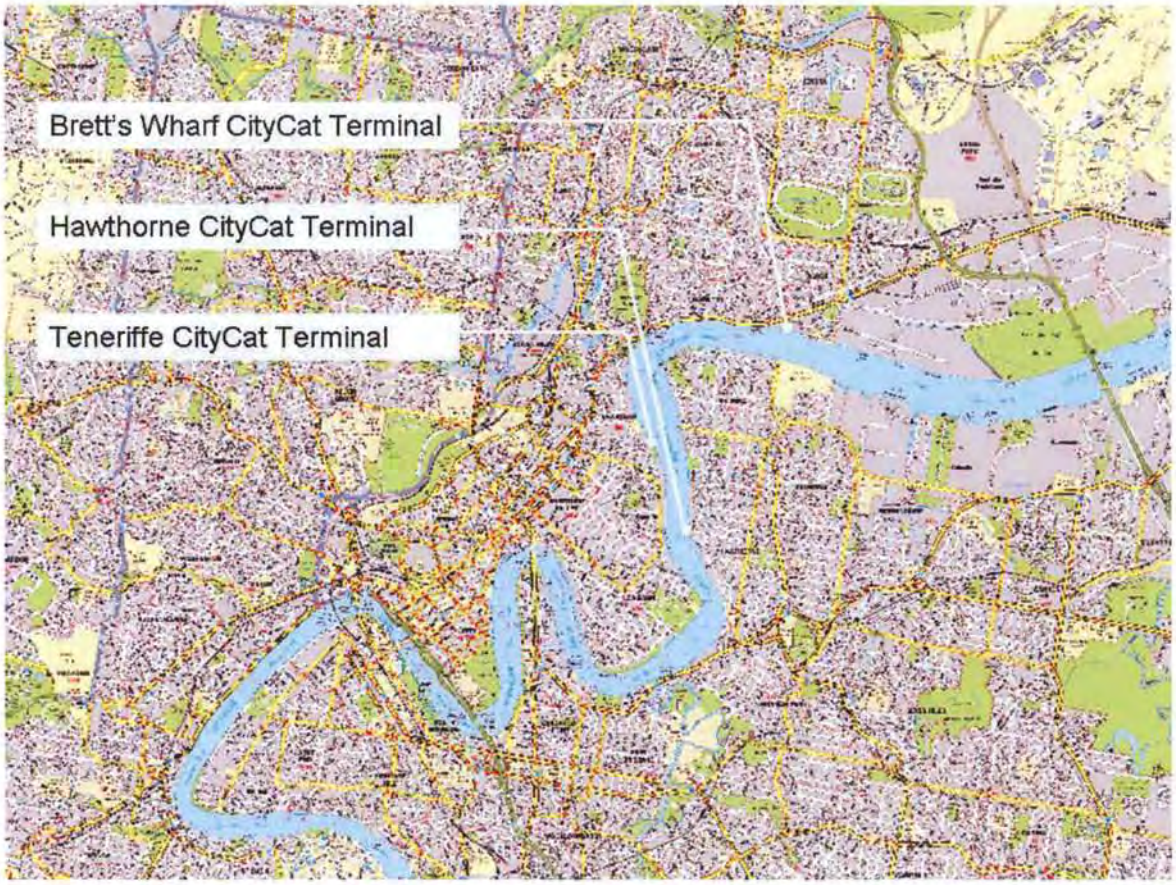

1.1 Purpose of this report

This report is the Design Basis Report for the design of 3 CityCat Ferry Terminals including waiting areas, gangway access and dual berthing pontoons. This report has been developed within one week of GHD's commission, and forms a functional design brief for each of the proposed terminals. The report does not include concept designs and documentation.

1.1.1 Information provided by the Client

Appendix B provides an overview of information provided by the client.

1.2 Site Context of each Terminal

1.2.1 Hawthorne

The Hawthorne Ferry terminal is an existing CityCat stop adapted from an earlier CityFerry service. Whilst a CityCat pontoon was fitted at the site in recent years, the waiting area function is still only catered for by the 1920s timber ferry terminal pavilion. This structure is heritage listed (Queensland Heritage Register) and has little capacity to cater for the significant passenger numbers which move through the terminal.

The terminal is located adjoining Hardcastle Park which is also heritage listed (Brisbane Heritage Register). Hardcastle Park is a picturesque local recreational space for Bulimba residents. Many families use the park on a regular basis and the CityCat activity provides an enjoyable viewing experience of marine activity from the park. The park also has significant vegetation and an attractive stone revetment wall which bespeak of an era where investment in riverside facilities was a priority for the residents 'on Bulimba'.[1]

Issues to be addressed at this site include:

- Closure of existing terminal during construction of the new terminal. The design will need to consider how the efficiency of construction of the new facility can be maximised so that the disruption of service can be minimised.
- General Configuration to maintain and enhance the heritage values of the existing terminal
- Catering for the strong patronage demand expected at this terminal

[1] 'On Bulimba' referred to the settlement of Bulimba prior to the construction of Manning Bridge at East Brisbane, when boat access to Bulimba, as if it were an island, prevailed.

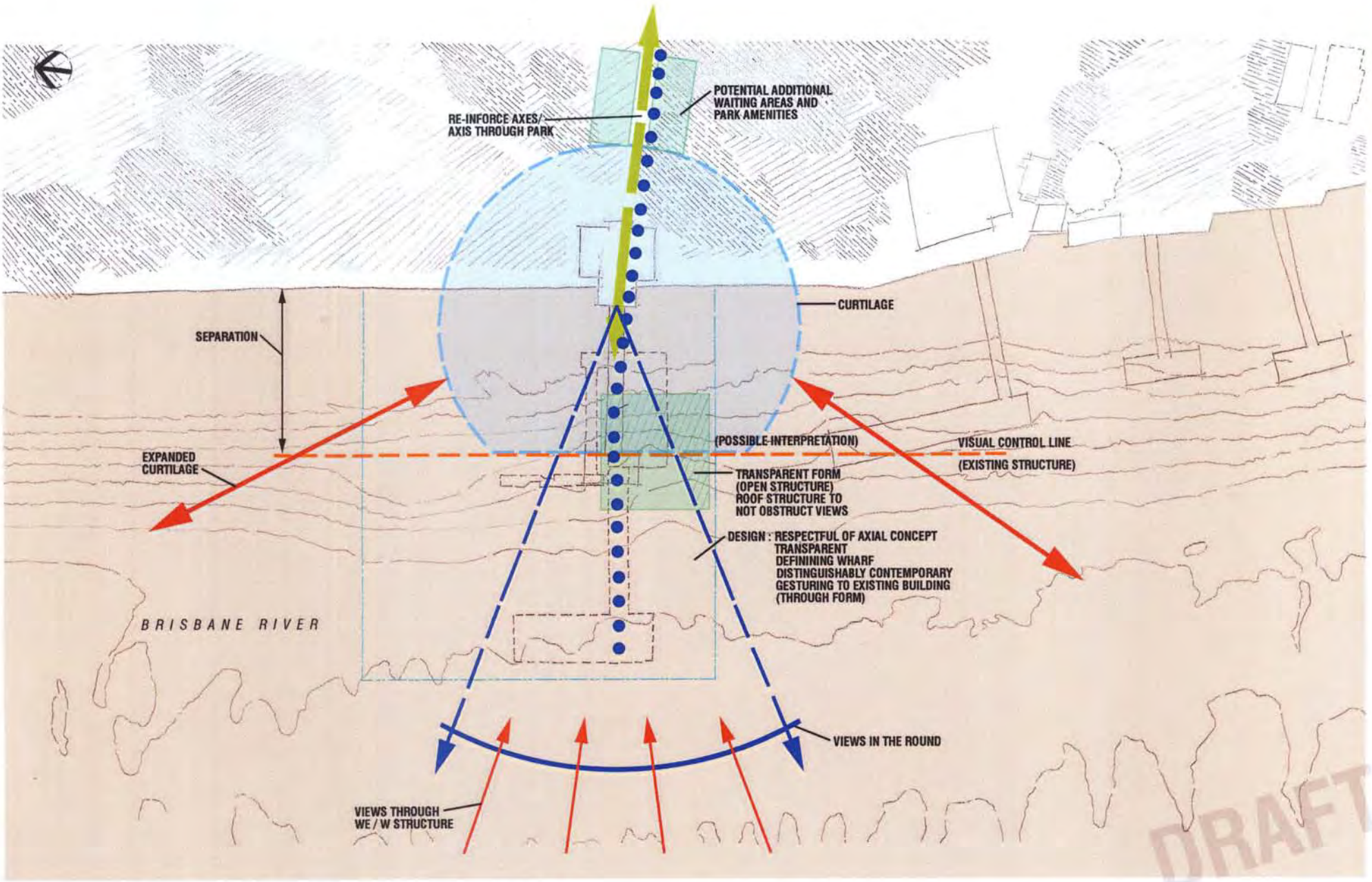

www.ghd.com.au

Proposed Hawthorne Ferry Terminal

BCC 3 CityCat Ferry Terminals

SCALE 1:250

date 26/11/09
job no. 41-22279
Figure 2

SITE ANALYSIS

BCC.133.0680

1.2.2 Teneriffe

The Teneriffe Terminal is located adjoining Brisbane premier urban renewal area. Since the 1990s Teneriffe has been converted from a disused riverside industrial area to a vibrant mixed use community with quality residential living, services and retail.

The proposed terminal site is immediately adjoining the existing cross-river ferry terminal pontoon, and is to be located on the upstream side. The existing jetty access to the cross-river terminal is expected to be maintained as a recreational structure only. The new terminal will be designed for the CityCat ferries, with CityFerry services able to utilise the CityCat terminal if required.

There are a range of key issues at this site which will need to be considered throughout the design of the terminal including:

- The likelihood that the design of this terminal will be similar to the Bretts Wharf terminal location, and that consideration for the design at the Bretts Wharf location will inform the design of the Teneriffe terminal (subject to the structural considerations at each site)
- Catering for the strong patronage demand expected at this terminal, particularly due to the latent demand for ferry services in this community and the interchange with the CityGlider bus service
- Interface with the future RiverWalk (pedestrian/ cycling conflicts)

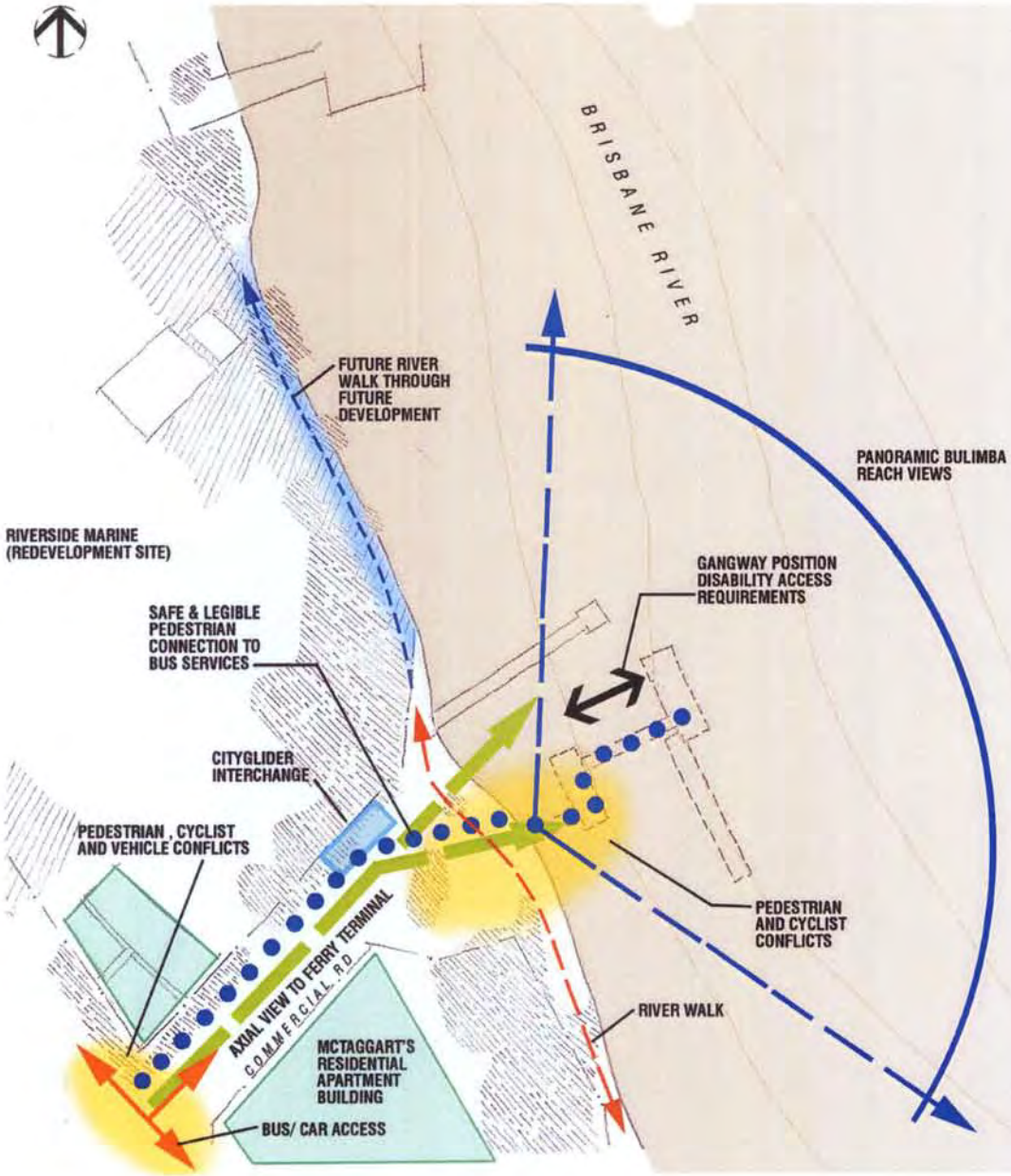

www.ghd.com.au

DRAFT

Proposed Teneriffe Ferry Terminal

BCC 3 CityCat Ferry Terminals

SCALE 1:1000

date 26/11/09
job no. 41-22279
Figure 3

SITE ANALYSIS

BCC.133.0682

1.2.3 Bretts Wharf

The Bretts Wharf terminal is a new terminal required due to the future road widening of Kingsford Smith Drive. The new terminal is to be located approximately 250 metres downstream of the existing terminal location, and is required to integrate well with the redevelopment plans for the adjoining site at 455 Kingsford Smith Drive. The site analysis in Figure 4 includes the layout of the buildings proposed in the redevelopment. In particular the redevelopment plans provide for a visual access through to Racecourse Road which is a major recreational attractor in Brisbane.

A terminal in the proposed location, with the configuration for the adjoining site represents a strong integrated land use and transport outcome at the detail level, and this terminal is expected to be busy throughout the day, including a strong nightime usage.

Key issues to be addressed at this site include:

- Integration with adjoining development in terms of site planning. Architectural design of the terminals will be conceived according to Council's requirements for a suite of similar terminals which are low maintenance.
- Need to remove/design around old cut off piles that may also protrude above the bed of the river
- Interface with the existing RiverWalk (pedestrian/ cycling conflicts)
- Need to incorporate a sustainability framework which provides design parameters and options for consideration of existing mangrove habitats

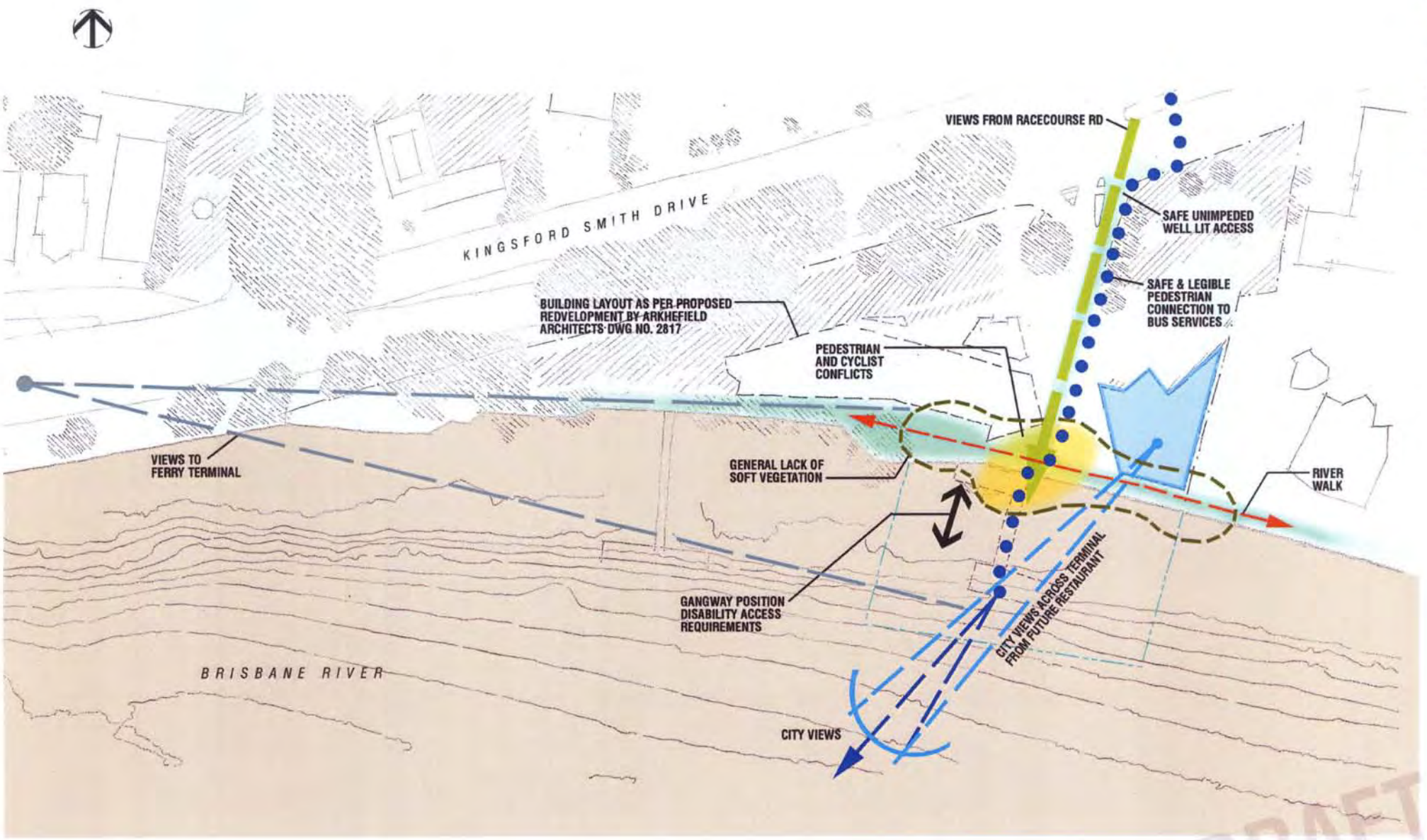

DRAFT

Proposed Bretts Wharf Ferry Terminal

BCC 3 CityCat Ferry Terminals

SCALE 1:400

date 26/11/09
job no. 41-22279
Figure 4

SITE ANALYSIS

www.ghd.com.au

2. Design Requirements

2.1 Council Ferry Terminal Specification

The Brisbane City Council Ferry Terminal Design Specification September 2009 (refer to Appendix C) provides design guidelines to govern the development of ferry terminals with the LGA. The following design elements are relevant to the 3 CityCat terminals:

- the pontoon and major components to have a minimum design life of 50 years;
- all components of the terminal are to be designed for low maintenance;
- the pontoon is to accommodate two CityCat vessels, allowing for dual berthing during operation;
- the pontoon is to be accessed by a gangway or a suitable walkway complying with Disability Discrmination Act (DDA) 1992, Disability Standards for Accessible Public Transport (DSAPT) 2002 and any relevant Australian Standard; and
- the structure is to be appropriate for all tidal levels between HAT and LAT.

Table 1 details a range of design elements incorporated into the terminals, including design compliance with relevant BCC specifications and issues to be addressed in future stages of the project.

Table 1 BCC Design Compliance

Design Elements	BCC Design Compliance	Issues to be addressed
Waiting Area	• Low maintenance structures • Disability compliant access to waiting area and to walkway	• Vandal resistant and durable materials • Sustainability framework assessment • Investigate the use of rain water collection for cleaning purposes and filling of CityCats
Walkway and Gangway	• DDA compliant two way access • Allow for pontoon to rise in case of a flood event • AS1428.1 Disability standard compliant grade to walkway.	• Disability Access Consultant review of Schematic design • 2 x wheelchairs and an upright able bodied person to pass simultaneously (clear trafficable width of 2050mm
Pontoon	• Pontoon to have 900mm freeboard at passenger door level at all tidal levels • Sized to allow for simultaneous berthing of two	

Design Elements	BCC Design Compliance	Issues to be addressed
	CityCats	

2.2 Architectural design

Council's intention is to provide attractive and legible facilities with robust and low maintenance architecture.

Each site has it own particular requirements, with Hawthorne Terminal requiring a response to the identified cultural heritage values of the existing ferry pavilion.

The architectural design of the terminals will be guided by:

- Council's 2010 Vision for a Well Designed Subtropical City;
- Response to the site planning issues identified in 1.2 Site analysis and 2.4.2;
- Low maintenance materials such as stainless steel, aluminium, and colorbond roof sheeting; and
- Architectural detailing which provides for the appropriate separation of material types to limit corrosion, as well as fixing details which allow for the drainage of water.

2.3 Public Utility and services

2.3.1 Hawthorne Ferry Terminal

Water

- Existing water service is available at existing waiting area building.
- Provide water meter at connection point with Council main if applicable (in a discreet but accessible location).
- Potable water service to be extended to provide for a hose cock in the terminal, on the berthing pontoon, and on the mooring pontoon for wash down purposes. Hose cocks to be vandal proof type.
- Suitable flexible joints to be provided in the water service pipe to allow for tidal movement of the pontoon.
- An approved backflow prevention valve to be provided to comply with AS/NZS 3500.

Sanitary Drainage

- No Sanitary drainage is required.

Roof water drainage

- Where applicable roof water will be collected in gutters and drained via downpipes direct to the river.
- Provision of a rainwater tanks to be considered having due regard for the limited area available adjacent to the existing waiting area building together with the conditions imposed on Heritage listed buildings. Possible options for provision of a rainwater tank to be provided with relevant costs and comments for consideration during the design stage. All gutters and downpipes to be 316 stainless steel.

Civil

- No new paths or roadways are required.
- All services to be designed to minimise damage by vandals as per Councils Crime Prevention Through Environmental Design (CPTED)

2.3.2 Teneriffe Ferry Terminal

Water

- Existing water service available. Provide water meter at connection point with Council main if applicable. Potable water service to be extended to provide for a hose cock on the pontoon for wash down purposes. Hose cock to be vandal proof type. Suitable flexible joints to be provided in the water service pipe to allow for tidal movement of the pontoon. An approved backflow prevention valve to be provided to comply with AS/NZS 3500.

Sanitary Drainage

- No Sanitary drainage is required.

Roof water drainage

- Where applicable roof water will be collected in gutters and drained via downpipes direct to the river. Provision of a rainwater tanks to be considered having due regard for the limited area available adjacent to the waiting area building. Possible options for provision of a rainwater tank to be provided with relevant costs and comments for consideration during the design stage. All gutters and downpipes to be 316 stainless steel.

Civil

- New pathways and parking for two staff are required.
- All services to be designed to minimise damage by vandals as per Councils Crime Prevention Through Environmental Design (CPTED)

2.3.3 Brett's Wharf Ferry Terminal

Water

- Existing water service is available on footpath of Kingsford Smith Drive. Provide water meter at connection point with Council main if applicable. Actual location of new water service to new terminal will need to be co-ordinated with Brisbane City Council, adjacent private developer and other relevant groups. Potable water service to be extended to provide for a hose cock in the terminals and on the pontoon for wash down purposes. Hose cock to be vandal proof type. Suitable flexible joints to be provided in the water service pipe to allow for tidal movement of the pontoon. An approved backflow prevention valve to be provided to comply with AS/NZS 3500.

Sanitary Drainage

- No Sanitary drainage is required.

Roof water drainage

- Where applicable roof water will be collected in gutters and drained via downpipes direct to the river. Provision of a rainwater tanks to be considered having due regard for the limited area available adjacent to the waiting area building. Possible options for provision of a rainwater tank to be provided

with relevant costs and comments for consideration during the design stage. All gutters and downpipes to be 316 stainless steel.

Civil

- Possible reinstatement of existing paths may be required due to provision of new water service.
- All services to be designed to minimise damage by vandals as per Councils Crime Prevention Through Environmental Design (CPTED)

2.4 Overview of BCC Codes and Policies

2.4.1 Brisbane City Plan

In accordance with Chapter 3, Part 10 of Brisbane City Plan 2000, each of the proposed structures is defined as a Landing as follows:

> ***A structure for mooring or launching boats and/or for passengers to embark and disembark, e.g. a marina, ramp, jetty, pontoon or riverside platform.***

For the proposed sites, City Plan classifies Landings as Impact Assessable development and accordingly, each structure requires a development permit for Material Change of Use to be granted by Council prior to construction. The application submitted to Council (prepared by Council) must demonstrate compliance with the Strategic Elements of City Plan, the Landing Code and other relevant planning scheme codes and polices. Impact Assessable development applications such as these incorporate a 15 business day public notification phase in which submissions can be made by the public in favour of, or against, the development. Council is required to take these submissions into account in the assessment of the application. A lawfully made submission also secures the submitter appeal rights in the Planning and Environment Court should they wish to appeal the decision.

Whilst GHD will provide designs which will assist in achieving all necessary approvals, the scope of work for this project does not include preparation of reports specifically required to obtain these approvals. Preparation of these reports and obtaining all necessary approvals is taken to be the responsibility of Brisbane City Council. It is GHD's understanding that documentation materials included in its deliverables will be utilised for community consultation which will assist Council in providing a process suitable to obtain approvals in a timely manner.

The development of these City Cat Terminals also triggers a number Commonwealth, State and Local Law approvals in addition to those triggered by City Plan. These permits and approvals will also need to be obtained to lawfully establish these terminals. To assist Council in this process, GHD has prepared an approvals register, which has been provided in Appendix D of this report. This register further outlines the scope of approvals that may be required and provides additional detail such as jurisdiction, timeframes, and information required to support each application.

2.4.2 CPTED Guidelines

Brisbane City Council's Crime Prevention Through Environmental Design (CPTED) Planning Scheme Policy acknowledges that adherence to basic CPTED elements can guide development projects to reduce crime, enhance community safety and improve liveability. The CPTED elements identified in the Planning Scheme Policy can be applied to all development types, however are particularly relevant to public accessible and high activity generating uses such as the proposed terminals. Application of

CPTED principles should be balanced against other design objectives. The generic elements relevant to CPTED include:

- Casual surveillance & sightlines;
- Land use mix & activity generators;
- Basic exterior building design;
- Lighting;
- Way-finding; and
- Predictable routes & entrapment locations

Table 2 below provides an assessment of the likely design issues generated by the required CPTED outcomes, detailing aspects of the design which can readily comply with the elements and issues to be addressed during the concept design development stage.

Table 2 CPTED Design Compliance

Generic CPTED Element	Design Compliance	Issues to be addressed
Casual surveillance & sightlines	▸ Pedestrian access and through points are clearly identified	▸ use of clear sight lines and transparent materials throughout the terminal ▸ avoid sharp changes of grade that minimise sightlines
Land use mix & activity generators	▸ Integration with surrounding uses to allow for casual surveillance opportunities	
Basic exterior building design	▸ CityCat terminal entrance is clearly distinguishable and oriented towards the public open space	▸ Ensure landscaping design will not provide concealment or entrapment areas ▸ Maximise variety of building design and landscaping to create an interesting built environment ▸ Minimise features of the structure that can be used as 'natural ladders' at the CityCat waiting area
Lighting		▸ Maximise opportunities for penetration of natural light into the CityCat terminal ▸ Install lighting fixtures which are high mounted, vandal resistant and deflect light

Generic CPTED Element	Design Compliance	Issues to be addressed
		downwards • Provide multiple lights that provide for consistent levels of lighting
Way-finding	• Signage will be in accordance with TransLink and DDA guidelines	• Signage identifies where assistance and key areas can be located • Signage is visible, concise and easily maintained
Predictable routes & entrapment locations	• No entrapment spots are included in the design	• Eliminate predictable routes from design • Ensure that predictable routes have good casual surveillance and provide for alternative access arrangements • Identify alternative routes by effective signage, which are preferably well lit, and frequently used

2.5 Disability access

Equitable access for all users regardless of disability is a requirement for the design for the CityCat Terminals and generally guided by the following legislation and policies:

- Disability Discrimination Act 1992
- Disability Standards for Accessible Public Transport 2002
- Australian Standard 1428 Design for Access and Mobility Parts 1: General Requirements for access – New building work and Part 2: Enhanced and Additional requirements – Buildings and facilities

The abovementioned standards principally provide for building design and the requirements are set out in the following sections. At this point in the project, GHD recognises that the legislation and policies governing the design of the facilities' disability access will require detailed consideration throughout the design process, in order to achieve the pre-eminent provisions of the Disability Discrimination Act.

In relation to disability access requirements, the ferry terminal design is also informed by standards and policies related to public transport facilities and maritime structures including:

- AS 4997-2005 Guidelines for the design of maritime structures
- AS 3962-2001 Guidelines for the design of marinas

- Brisbane City Council Ferry Infrastructure, Ferries and the *Disability Standards for Accessible Public Transport* 2002

2.5.1 Brief description of design issues

The key issues related to equitable access requirements for the terminal are:

- Ramp access including widths between handrails
- Signage and lighting

The details surrounding lighting and signage requirements will be scoped in the next detailed design phase of this project. At this stage, the general arrangements provide for disability access in accordance with the standards designed for other Ferry Terminals in the Brisbane River.

2.5.2 Ferry Infrastructure, Ferries and the Disability Standard for Accessible Public Transport 2002

Brisbane City Council provides policy guidance in the interpretation of the relevant disability standards for Ferry infrastructure in the form of the *Ferry Infrastructure, Ferries and the Disability Standard for Accessible Public Transport 2002* document. In relation to access ramps (gangways) this document references AS1428.1 (2001) and AS1428.2 (1992) Design for Access and Mobility as described in section 2.5.6.

However, the Brisbane CityCat terminals including the Riverside Terminal (2005) do not provide landings within the gangway length. Brisbane City Council through its' representative (Ashley Horneman 17 August 2009) advised that no landings would be required given the constraints imposed by tidal movements and the location of the quay line.

The Ferry Terminal gangway and pontoon are a maritime structure and accordingly the requirements for ramp access are described in the standards as follows:

2.5.3 AS4997/2005 – Guidelines for the design of maritime structures – Section 3.4.3

3.4.3 Access to public transport facilities

Where access is required to public transport facilities, structures should comply with the requirements of the Disability Standards for Accessible Public Transport.

Gradients of gangways (hinged ramps attached to floating structures, whose gradients varies with the tide) should not exceed 1 in 8 when the tide is at LAT, or steeper than 1 in 12 for more than 20% of the time.

For Public transport facilities such as the Brisbane City Council's CityCat terminals, this requirement is interpreted as 1:14 slope as per section 6.5 of DSAPT.

2.5.4 Disability Standard for Accessible Public Transport 2002 (made under subsection 31 (1) of the Disability Discrimination Act 1992

As described in section 6.5 Slope of ramps connected to pontoon wharves:

6.1 Ramps on access paths

- *A ramp on an access path must comply with AS1428.2 Clause 8.*

6.4 Slope of external boarding ramps

The slope of an external boarding ramp must not exceed:

1 in 4 for unassisted access (AS/NZS2856.1) Clause 2.1.8 (e) (including the notes))[2]*; and*

1 in 8 for unassisted access where the ramp length is less than 1520 mm (AS1428.2 Clause 8.4.2 (a) and AS1428.1 Figure 8)

6.5 Slope of ramps connected to pontoon wharves

The slope of a ramp connected to a pontoon wharf must comply with section 6.1 for at least 80% of the high and low tide levels listed in standard tide charts.

2.5.5 Australian Standard – Design for Access and Mobility 1428.1-2001

In isolation, Australian Standards are not pieces of law and have no legal standing. They are opinions, best described as informative. When they are called up by a referencing authority, for example, the DDA or the BCA, only then do they have legal standing, a standing that is equal to the referencing authority. Further, it is essential to note that one cannot simply select the latest (chronologically speaking) Standard put out by the publishing house, Standards Australia: one must identify the Standard specified by the referencing authority, e.g. DDA, BCA, to meet each individual design requirement.

Please note that Standards Australia identifies in particular Standards their prescribed design outcome meets a minimum requirement only. Users are entitled to deliver better than minimum.

Part 1 of the Standard sets out the general provisions for new building works including walkways, ramps and landings elements which relate to the CityCat ferry terminal components. The key issue for consideration is the interpretation of these specific provisions to the design of the CityCat terminal facilities.

5 Walkways, Ramps and Landings

5.3 Ramps

The maximum gradient of a ramp exceeding in 1520 mm in length shall be 1 in 14.

(b) Ramps shall be provided with landing as specified in Clause 5.7 at the bottom and at the top of the ramp and at intervals not exceeding the following:

(i) for ramp gradients of 1 in 14…..9m.

(ii) for ramp gradients of 1 in 20….15m.

(iii) for ramp gradient between 1 in 20 and 1 in 14, at intervals that shall be obtained by linear interpolation.

5.7 Landings

The requirements for landings are as follows:

The length of landings at walkways and ramps shall be not less than 1200 mm and at kerb ramps and step ramps, not less than 1330 mm.

[2] This is not considered appropriate for pedestrian access.

Where doorways are at landings, the dimensions of the landings shall be in accordance with the requirements for circulation spaces at doorways in Clause 7.3 (see Figure 6).

2.5.6 Australian Standard – Design for Access and Mobility 1428.2-1992

Part 2 of the Standard sets out *Enhanced and additional requirements - Buildings and facilities*, including the following further provisions in relation to walkways, ramps and landings:

8 Walkways, Ramps and Landings

AS1428.2 Part 8.1 General Walkways, ramps and landings shall comply with 1428.1, with the following exceptions and additional requirements:

(b) Provision of landings at ramps- Ramps shall be provided with landings at the top and bottom of the ramp and at intervals not exceeding –

- *for ramp gradients of 1 in 14: 6m;*
- *for ramp gradients of 1 in 19: 14m; and*
- *for ramp gradients between 1 in 19 and 1 in 14, at intervals which shall be obtained by linear interpolation.*

2.5.7 Australian Standard – Guidelines for design of Marinas 3962 – 2000

3.6.2 Maximum Slope

The maximum slope of a gangway and treadplate for a marina should not exceed 1:3.5. For private pontoons with no public access, the maximum slope should not exceed 1:3. The gangway should be in accordance with AS 1657.

Where access for disabled persons is required, the slope of gangways and tread plates should not exceed 1:8. This is only satisfactory where assisted wheelchair access is provided. Public facilities have to comply with AS 1428.1, Design for access and mobility.

The maximum slope is the slope that would occur at a water level of CD. The walking surface should be finished in accordance with AS 4586.

However, for the purposes of a facility to be provided for the general public, these provisions are not considered appropriate since ramps at 1:3.5 are clearly to be used by able bodies boat users.

2.5.8 Brisbane City Council's Ferry Terminal Design Specification

The Council's specification provides that the ferry infrastructure must be designed in accordance with the provisions of the Disability Discrimination Act and the Disability Standard for Accessible Public Transport. In particular the Council's specification provides for fixed walkway to be designed to DDA (in essence AS 1428.2). This is not considered to refer to the fixed gangway located between the Terminal building and Deck 1.

2.5.9 Disability Discrimination Act

It is important and in accordance with the general and over-riding principles of the Disability Discrimination Act 1992, that all persons who wish to use the terminal and ferry service can do so in a fair and equitable manner. Whilst the full requirements for lighting, tactile surface indicators and signage

will be considered in future design phases, in this phase it is the general arrangements for ramp access which must be determined.

A review of the documents and advice above reveals conflicting information regarding the applicability of AS1428.2 in relation to the requirements for landings on a gangway. Council has advised that the other CityCat terminal gangways are designed to a length of 25 metres with a maximum of 1:14 fall but with no landings, reference documents call up AS1428.2.

As an initial assessment of these issues, Council provided a statements of assessment regarding disability access during the tender process (refer to Appendix E) , and has confirmed that further advice from Brisbane City Legal Practice is pending. As an input to these processes, the GHD team include John Mayo, an accessibility advisory consultant. John will provide advice throughout the coming design stages to provide an appropriate disability access outcomes for each of the terminals.

3. Design Codes and References

3.1 Design Codes

The latest edition of the following design standard codes shall be the basis of the design for the various structures comprising the CityCat Terminals. Codes referenced in these standards will also be considered to form part of the Design Criteria.

AS 4997	Guidelines for the Design of Maritime Structures
AS 1170	Structural Design Actions – Loading Codes
AS 3600	Concrete Structures
AS 3610	Formwork for Concrete Structures
AS 4100	Steel Structures
AS 3990	Mechanical Equipment – Steelwork
AS 1554	Structural Steel Welding
AS 2159	Piling Code
AS 1726	Geotechnical Site Investigations
AS/NZS 2312	Guide to the Protection of Structural Steel against Atmospheric Corrosion by the use of Protective Coatings
AS 2832.3	Cathodic Protection of Metals – Part 3: Fixed Immersed Structures
AS/NZS 1664	Aluminium Structures
AS 1665	Welding of Aluminium Structures
AS 1158-2005	Lighting for Road and Public Spaces
AS 1768	Lightning Protection
AS 3962	Guidelines for Design of Marinas
AS 1428.1	Design for access and mobility – General requirements for access – New building work
AS 1428.2	Design for access and mobility – Enhanced and additional requirements – Buildings and facilities

3.2 References

The latest edition of the following references will be used to augment the design codes where necessary.

BS 6349	Code of Practice for Maritime Structures
BCA	Building Code of Australia
PIANC	Guidelines to the Design of Fender Systems
PIANC	Seismic Design Guidelines for Port Structures

PIANC	PIANC Criteria for Movements of Moored Ships in Harbours
NFPA 307	Standard for the Construction and Fire Protection of Marine Terminals, Piers and Wharves
EAU 1995	Recommendations of the Committee for Waterfront Structures Harbours and Waterways
CEM	US Army Corps of Engineers – Coastal Engineering Manual
DPA	Disability Discrimination Act 1992
DSAPT	Disability Standards for Accessible Public Transport 2002
BCCDS	Brisbane City Council Ferry Terminal Design Specification September 2009

4. General Design Criteria

4.1 Design Life

The works shall be designed to ensure the following minimum design service lives:

- New Marine structures shall be 50 years
- Existing Marine structures shall be assessed based on any condition assessments.
- Cathodic Protection System shall be 10 years.
- Mechanical Equipment / Electrical Equipment shall be 20 years
- Services generally shall be 20 years
- Minimum mechanical component service life shall be 10 years and 75,000 hours unless specified otherwise

For marine structures where a 50 year design life is not practical such as for ladders, fenders systems, wire ropes, etc, the design shall be such as to allow ready replacement.

The minimum design life for protective coatings shall be as follows:

- Time to first maintenance - 10 years
- Time for subsequent maintenance - 5 years
- Time for periodic inspection - 5 years

4.2 Geometry

		Source
Deck Level of Pontoon	Minimum unloaded freeboard of 900 mm	BCC
Quay Length of Pontoon	Suitable for berthing and operation of two CityCat Vessels with a minimum clearance between vessels of 5.0m when berthed bow to bow. This minimum clearance also applies at Teneriffe between the outer moored CityCat and the CitCat on the upstream berth.	BCC[3]
Minimum Water Depth	-2.92m LAT (-4.16m AHD) at the berthing face. Hydrographic surveys will be required to confirm the available water depth once the location of the pontoon is confirmed. This provides a minimum 1.5m under keel clearance. Further concessions may be required for the moorings that are closest to the bank at Hawthorne and Teneriffe and BCC will discuss this with the CityCat operators if required.	BCC
Breasting and Mooring Piles	On terminals where there is no overnight mooring at the berthing pontoon, single breasting piles are required 7 to 10 metres from the end of the pontoon and in line with the berthing face. On terminals where overnight mooring of the CityCats at the berthing pontoon is required, single mooring piles are required at approximately 15.5 metres from the end of the pontoon (within reach	BCC

[3] Confirmation received by TransDev and communicated to GHD via email by Ashley Horneman on 27 November 2009

		Source
	of the CityCat loading point) and in line with the berthing face.	

4.3 Climate and Temperature

		Source
Climate data for the sites are available on the Bureau of Meteorology website http://www.bom.gov.au/climate/averages/tables/cw_040842.shtml		BOM
Temperature	Structures shall be designed to accommodate movements due to thermal expansion and contraction. Deck temperatures and temperature distributions shall be assessed in accordance with AS 5100 and include the effects of differential temperature gradients where relevant.	

4.4 Datum and Grids

Survey Control		Source
Vertical Datum	The Project shall operate on Australian Height Datum (AHD) for all levels related to structures. Water depths and bed levels in the river will be on Chart Datum (LAT) and a graphic showing the relationship of the tidal planes to AHD will be provided on all drawings that depict both structures and bed levels. Australian Height Datum (AHD) corresponds to +1.24m LAT	2010 Tide Tables MSQ
Horizontal Datum	The Horizontal datum for the project is BCSG02 (BCC grid system)	

4.5 Topography and Bathymetry

Location		Source
Hawthorne	Bathymetry data at 0.2m contour intervals exists for the area surrounding the proposed location	DTM & POB Hydrographic Survey March 08
Brett's Wharf	Bathymetry data at 0.1m contour intervals exists for the area surrounding the proposed location	North Surveys 9 October 2009
Teneriffe	Bathymetry data at 0.2m contours exists for the area surrounding the proposed location	North Surveys 8 October 2009

At Bretts Wharf the area available for the pontoon and berthing is tightly constrained by the bathymetry (water depth) and the quay line (maximum distance from the river bank determined by the Harbour Master)

4.6 Met-Ocean Data

Tidal Planes	Level (m CD)	Level (m AHD)	Source
Highest Astronomical Tide (HAT)	+2.89	+1.65	Queensland Tide Tables 2010
Mean High Water Spring (MHWS)	+2.30	+1.06	Cairncross Dock to New Farm
Mean High Water Neap (MHWN)	+1.89	+0.65	
Mean Sea Level (MSL)	+1.34	+0.10	
Australian Height Datum (AHD)	+1.24	0.00	
Mean Low Water Neap (MLWN)	+0.81	-0.43	
Mean Low Water Spring (MLWS)	+0.39	-0.85	
Lowest Astronomical Tide (LAT)	+0.00	-1.24	

Design Water Levels

ARI (Years)	Design Application	Total Design Water Level (m AHD)	BCC
10	Terminal Operation	+1.9	Design water levels include surge + tide
100	Structural Integrity	+2.5	

Design water levels are based on storm tide levels. The 1:10 year storm tide level of 1.9m AHD is the highest level that the terminals can remain operational as at higher levels the top of the gangway will be affected by wave action (Top of gangway is at RL2.1m AHD). Flood levels are lower and will not affect operations which are governed by amount of debris in the water and high flood flow velocities.

Design Current

Hawthorne	The maximum current velocity that shall be adopted for design shall be 2.0m/s in any direction.	BCC
Brett's Wharf	The maximum current velocity that shall be adopted for design shall be 1.7m/s in any direction.	BCC
Teneriffe	The maximum current velocity that shall be adopted for design shall be 1.8m/s in any direction.	BCC

Current loads shall be determined from Morrisons equation and superimposed with co-existing wave loads.

Design Wave

Design wave conditions	1 in 500yr	TBD
Operational wave conditions	1 in 25yr:	TBD
Waves from vessels	H_s = 0.6m, T_p = 6s	BCC

Design and operational wave conditions shall be determined from an analysis of the wind climate and fetch lengths at each site in accordance with "Brisbane City Council Ferry Terminal Design Specification"

4.7 Wind Data

		Source
Wind – Design	Region B Terrain Category 2 Recurrence Interval, R = 500 years Regional Wind Speed, V_u = 57 m/s	AS1170.2
Wind – Operating	Recurrence Interval, R = 25 years Regional Wind Speed, V_u = 39 m/s	AS1170.2
Wind – Design	Structures and fittings shall be designed to accommodate wind loads from the either of the following design conditions: • Structural Integrity – 57m/s – no live load – vessels in Berth • Operating conditions – 39m/s - full live load – vessels in Berth	

4.8 Marine Growth

Marine Growth Thickness	Allowance of 100 mm all around the pile up to the level of Mean High Water Neaps.	TBA

4.9 Design Vessel

Design Vessel	CityCat (Generation II and III)	Source
Vessel Type	High Speed Ferry	BCC
Displacement (displ)	35.5 t	BCC
Overall length (LOA)	25.5 m	BCC
Length Between Perpendiculars (LBP)	24.9 m	BCC
Laden Draft	1.42 m	BCC
Beam	7.60 m	BCC
Hull Beam (2 off)	1.20 m	BCC
Windage Area (Profile)	73 m^2	BCC
Windage Area (Bow)	22 m^2	BCC
Minimum underkeel clearance	1.5m	BCC (see

Design Vessel	CityCat (Generation II and III)	Source
		note)
Minimum depth of water	2.92m at LAT	UKC + laden draft

Note:

1. Generation I CityCats are smaller than Generation II and III except for the Beam measurement which is 7.70m
2. Minimum underkeel clearance set at 1.5m as per email from Ashley Horneman (BCC) 26/11/09

4.10 Electrical

4.10.1 Lighting

The BCC ferry terminal design specification (BCCFTDC) that requires minimum of 200 lux of illumination to be maintained within the waiting and walkway areas.

- Preferred use of fluorescent fittings with vandalproof housing is to be specified for the walkways and pontoon. Downlight is to be selected for the waiting area near the kiosk.
- Angled mounting and plates to provide cut-off is to be specified for the lights to reduce spillage to the adjacent area and to avoid glare from the terminal.
- Security lights shall be provided on non-operating hours.
- Use of either motion detection or timer switch for general lighting shall be specified.
- Emergency lighting shall be provided with exit lights.
- Switches shall be located in the Kiosk or secured area.

4.10.2 Power

- Minimum of 1 GPO with spring loaded protective cover is specified as per the BCCFTDC which will be located in key areas of the pontoon.
- Minimum of 2 GPO with spring loaded protective cover shall be located in the waiting area, and GPO's in the Kiosk as required.
- Keyed enclosure in for the switchboard and meters shall be provided, with the enclosure to be IP rated.

4.10.3 Communications

- Conduits shall be design to accommodate future cabling requirements to the pontoon. A keyed box where the conduits will be terminated will be located on the pontoon.

4.11 Pontoon

		Source
Acceleration	Maximum lateral acceleration at the commuter centre of gravity of	BCC

		Source
	2.5m/s^2	
Surface	Surface shall be free from longitudinal joints and a Non Slip Surface Coating to be applied to all trafficable areas (BCC preference: Comcork AquaDeck®)	BCC
Design Levels	Pontoon is remain on the piles between the levels described in section 4.6	BCC
Top of Pile	RL of the top of the pile shall be 1.0m higher than the pile guide system at the Q100 or DFE level	BCC
Freeboard	900 mm minimum unloaded freeboard at passenger door level	BCC
Safety Ladders	Two access ladders shall be provided on the pontoon	BCC
Vandalism	The pontoon, piles and components shall be designed to be resistant to vandalism	BCC
DDA and DSAPT Compliance	All fixed walkway and waiting area/terminal levels shall be designed to comply with DDA 1992 and DSAPT 2002 at all times, except articulated gangway levels and angles which shall comply with DDA, DSAPT and AS1428.1 for 80% of the time between HAT and LAT	BCC

4.12 Gangway

		Source
Material	Gangway to be constructed of Aluminium	BCC
Gangway landing	The gangway landing is to be recessed so that the gangway finishes level with the pontoon deck	BCC
Slope	Maximum slope of the gangway shall not exceed 1:14 for 80% of the tide range between LAT and HAT	BCC
Connection	Gangway connection at the walkway or shore abutment shall allow for the raising of the pontoon above the level of the walkway or abutment connection with no permanent damage to all components during flood events	BCC

5. Marine Structural / Civil Design

5.1 General

The design of civil and structural components of the works shall be undertaken in accordance with the relevant Australian Codes.

5.2 Loads

The following loads (unfactored) shall be used for the design of the marine, civil, and structures components of the facility.

5.2.1 Dead Loads - Selfweight		Source
Self weight due to dead loads of structures;		
Density concrete	2450 kg/m^3	
Density steel	7850 kg/m^3	
Density seawater	1025 kg/m^3	
Density Aluminium	To be taken from the manufactures specifications, dependent upon the alloy composition of the material	

5.2.2 Live Loads		Source
Structural Integrity	5 kPa uniform / pattern load or a 4.5 kN concentrated load, which ever produces the most adverse effect	
Stability	3 kPa uniform / pattern load	

5.2.3 Wave Loads	Source
Design return intervals for operational and ultimate design wave conditions shall be 10 yrs and 100 yrs respectively.	
Design waves shall be combined with operational and ultimate design water levels.	

5.2.4 Berthing Loads		Source
Wharf fenders shall be buckling type, designed and selected in accordance with the design principles outlined in PIANC / BS6349 Part 4 and summarized below.		
Berthing Design Parameters		
Berthing velocity		BCC
Normal Berthing	0.5 m/s	
Accidental Berthing	3.0 m/s	
Berthing angle		
Normal Berthing	Max 15 degrees	
Accidental Berthing	Max 45 degrees	
Added Mass (C_m)	$(M + M_v) / M = 1.65$	
Eccentricity (C_e)	Quarter-point berthing	
Softness (C_s)		
Normal Berthing	1.0	
Accidental Berthing	0.9 (significant deflection of the vessels hull)	
Configuration (C_c)	1.0	
Factor of Safety (FOS)		
Normal Berthing	2.0	
Accidental Berthing	1.0	
Friction Coefficient	0.25	
Average face pressure	200 kPa	
The evaluation of required berthing energy for normal berthing shall allow for low blow, angular shear reduction and a manufacturer's tolerance of 10% above or below the published values. For abnormal berthing, the manufacturer's tolerance does not apply. The evaluation of the design fender reaction shall allow for an additional 10% tolerance above the manufacturer's published values.		
Fender panels shall be faced with Ultra High Molecular Weight Polyethylene. Design shear friction of 0.25 shall be used for design.		
The fender system is to accommodate all design vessels and be configured such that design ships can not catch under fender panels and that gunwales or belting are considered in the design.		

5.2.5 Mooring Loads	Source
Mooring forces shall consider the vertical line envelopes at any tide and loading state.	
Mooring forces shall consider the horizontal line envelopes.	
Sufficient access shall be provided around mooring equipment to manually handle mooring lines.	
Rope guards shall be provided on wharf edges to prevent abrasion of mooring lines during their handling and operation.	
Aluminium or stainless steel Mooring Cleats shall be fitted to the pontoon at a maximum of 3m centres.	

5.3 Load Combinations and Factors

The design philosophy shall incorporate Strength, Serviceability and Stability limit states in accordance with Australian Standards. Live load combination factors for combinations including extreme events shall be applied generally in accordance with AS 1170.0, and with AS 4997 for wave actions.

Load Combinations

Load Case	1	2	4	5	7	9	11	12	13	14
Dead Load (incl SW)	1.35	1.2	1.2	1.2	1.2	1	0.9	0.9	0.9	0.9
Live Load		1.5	0.6	0.6	0.6	0.6				
Equipment Live Loads		1.5	0.6	0.6	0.6	0.6				
Wind Load Operational				1	1	1		1	1	1
Wind Load ULS			1				1			
Wave Load Operational				1	1	1		1	1	1
Wave Load ULS			1				1			
Current Load Operational				1	1	1		1	1	1
Current Load ULS			1				1			
Berthing Load				1.5				1.5		
Mooring Load			1.5		1.5	0.6[1]	1		1.5	0.6[1]
Thermal Load[2]			1.25	1.25	1.25	1.25	1.25	1.25	1.25	1.25
Seismic Load ULS						1				1

1 - Use operational line loads from mooring analysis if available

2 - Thermal loads shall be determined using the temperature values provided in AS 5100

5.4 Construction Provisions

All transportation and construction loads shall be taken into account for the design of the CityCat terminals and its individual components. Parts of the structure that will be used for construction shall be adequately protected and designed for the appropriate construction and erection loads. Prefabrication of components is to be implemented as far as possible to minimise on-site construction time.

5.4.1 Craneage and Lift Capacity

The dimensions of precast units shall be determined with regard to transportation to the site, and the weight of precast units shall be determined with regard to a reasonable lifting capacity for the barge during installation

5.5 Materials and Durability

This section outlines the GHD durability design approach for the City Cat terminals.

The durability plan for the terminals will be developed in stages as the design progresses. This document includes concept stage summary of significant durability considerations and will be further developed as the design progresses.

The durability planning process involves identification of key components, their required lifetimes, exposure conditions and deterioration mechanisms as well as guidance on materials selection, coatings, concrete mix design and detailing, cathodic protection, any ongoing inspection and maintenance requirements and other strategies. The durability plan will then govern design and specification of the structures.

For this project, the client specification requires a 50-year design lifetime. The durability planning will set out how this lifetime will be achieved.

5.5.1 Key Durability Issues

A meeting was held with GHD and client staff on 24 November 2009 to identify some of the important durability considerations. This included discussion on Council's existing ferry terminals and lessons learned from them.

It is understood that Council's aim is to design for low maintenance with the intention to minimise down time and maintenance/repair costs.

Key components and durability issues were identified as per the table below.

Table 3 Concept Stage Durability Summary

Component	Exposure	Durability Consideration	Design Options
Steel piles	Saline river water – submerged, tidal, splash and atmospheric	Corrosion of steel	Cathodic protection Paint coatings
	Wearing surfaces contacting pontoon	Abrasion of paint, corrosion	Stainless wearing surfaces / sleeving

Component	Exposure	Durability Consideration	Design Options
Steel pontoons	External submerged	Corrosion of steel	Cathodic protection Paint coatings
	Top deck surface	Non slip surface deterioration	Profile to avoid ponding
	Internal spaces	Corrosion from water ingress	Coatings Lime or cement fill Corrosion inhibitors
Aluminium gangways	Marine atmospheric	Atmospheric corrosion	Alloy selection Fabrication quality Routine cleaning
Reinforced concrete	Marine tidal or atmospheric	Reinforcement corrosion	Mix design and cover depth
Handrails and infill panels	Marine atmospheric UV	Dissimilar metal corrosion Crevice corrosion Deterioration of vinyls/fabrics	Materials and alloy selection

5.5.2 Cathodic Protection Design Basis

Cathodic protection will be provided to submerged steel surfaces via sacrificial galvanic anodes. Zinc anodes are likely to be most appropriate for the variable salinity of the river water. CP anodes will be designed for a lifetime of 10 to 15 years to match the expected maintenance intervals on paint coatings on structures.

Anode connections will be bolted in order to simplify replacement procedures. Where possible, anode connections will be made in accessible locations to minimize replacement difficulty and cost.

Zinc anode sizes will be standardised across the 3 terminals where possible and the design will use anode types common to BCC's other terminals if practicable.

6. Construction Materials

6.1 Concrete

All concrete shall comply with the relevant Australian standards and the following requirements.

Marine Reinforced Concrete		**Source**
Reinforced Concrete Grade	S50	AS 3600
Exposure Classification	C (design life of 50 years)	AS 3600
Cementitious Content	Minimum: 400 kg/m³ Maximum: 450 kg/m³	
Fly Ash	Precast: 25% Insitu 20%	
Water / Cementitious Ratio	0.40 (maximum)	
Maximum Shrinkage	600 microstrain at 28 days	
Chloride Diffusion Coefficient	Maximum Limit: 2.0×10^{-12} m/s^2 Tested by NT Build 443, commencing at 28 days age for GP cement and at 56 days age for LH cement.	
Curing	Minimum 10 days wet curing or forms left in place for 10 days. If forms are stripped then supplementary water curing should take place to make up a total of 10 days curing.	
Additives	As per Specification – Concrete Work	
Aggregate	20 mm maximum size	
Reinforcing Bars	Grade D500N, with Min Yield Strength of 500 MPa	
Cast in fittings	Grade 316 Stainless Steel. Grade 316L Stainless Steel if welding required.	
Concrete Finishes	All non-formed concrete surfaces shall be finished as follows: Broom finish for surfaces of roads and slabs with pedestrian and vehicular access; Steel float finish for kerbs, tops of walls, and members exposed to weathering and seawater splashing; Broom finish for areas intended to receive equipment grouting	

6.2 Structural Steel

All structural steel including bolting shall confirm to the requirements of the relevant Australian Standards. The following strength grades shall apply.

Structural Steel		Source
Tubular Piling	Grade 350	
Steel Plate	Grade 350 to AS/NZS 3678-250	
Rolled and Welded Sections	BHP 300PLUS exceeding the requirements of AS/NZS 3697.1	
Welding	Grade E48 Electrodes	
Bolts	Grade 4.6 or 8.8	
	Grade A4-70 for stainless steel	

6.3 Aluminium

All aluminium confirm to the requirements of the relevant Australian Standards. All aluminium shall be marine grade.

Aluminium		Source
Floor Plate	Grade 5251 Temper T0	
Aluminium Sections	Grade 6061 Temper T6	

7. Geotechnical Data

7.1 Geotechnical investigation

Geotechnical investigation reports for Hawthorne Terminal (Reference CD/G1-080625PR003Atw, July 2009) and the existing Bretts Wharf Terminal (Reference CD/G1-080625PR004Atw, July 2009) have been made available. It is understood that BCC have completed two boreholes through the revetment at Teneriffe and these results will be made available as soon as possible. Offshore borehole reports for Teneriffe, and the site of the proposed new Bretts Wharf terminal will be made available in early January 2010. These reports will provide information for pile design.

7.2 Ground profiles

The ground conditions at Hawthorne are shown to typically comprise:

- 9.5m of very soft to soft silty clay;
- 4.0m of loose to medium dense sands and gravels;
- 4.5m of dense to very dense sands and gravels; and
- Weathered phyllite.

The ground conditions at Bretts Wharf are shown to typically comprise:

- 11.0m of very soft to soft silty clay;
- 2.5m of loose to medium dense sands and gravels; and
- Greywacke/Quartzite rock, increasing strength with depth.

The existing and supplementary investigation data will be collated and used to develop a ground model at each of the Terminal sites. The ground model will take account of the ground stratigraphy with emphasis on the depth of any soft/loose marine sediments as well as the level of appropriate founding strata.

7.3 Geotechncial design parameters

Design parameters for each stratum will be developed based on strength descriptions from the borehole logs, laboratory test data and experience of similar soils. The potential influence of existing timber piles at Bretts wharf will be considered in the development of geotechnical design parameters for that site.

7.4 Foundation options

The presence of soft deposit over dense deposits is likely to constrain the depth to which driven piles can penetrate and thus may provide limited lateral resistance. The use of either driven or bored piles will therefore be considered to ensure sufficient founding depth and pile lateral resistance.

7.5 Design standards

7.5.1 Axial capacity

Geotechnical pile design will be in general compliance with AS2159 guidelines. For piles bearing on or socketed into rock, Williams & Pells (1981) and Tomlinson (1994) will also be used for guidance. Determinations of axial pile capacity will be based on the following factors of safety for working stress design:

- Compression capacity: FoS = 2
- Tension capacity : FoS = 3.0

For piles which require rock sockets, pile liners will be required to provide support through the soft deposits. The rock socket will be designed to provide all of the required compression resistance (i.e. ignoring any contribution in shaft resistance against the temporary steel liner).

Consideration will be given to designing the rock socket to resist load along the shaft only (i.e. negligible end bearing), so as to limit the potentially onerous construction requirement to ensure a clean socket base.

7.5.2 Lateral capacity

Lateral pile analysis will utilise in-house software where soil/ pile interaction is modelled with a series of non-linear "p-y" load transfer curves (analogous to non-linear springs) along the pile length. The design will assume pile head fixity against rotation, which minimises moment development in the piles.

8. Heritage Considerations – Hawthorne Ferry Terminal

8.1 Significance

The significance of the Hawthorne Ferry Terminal is inherent in its continued use as a purpose built structure and public utility that is becoming an increasingly rare typology. The Terminal building is an intact and carefully considered example of its type and is important for its size and for the design quality that it represents. The significance of the Terminal building is enhanced through its setting in Hardcastle Park, which contains elements that re-enforce the Ferry Terminal's civic qualities. Coupled together, Hawthorne and Bulimba survive as the most impressive terminal and respective waiting areas along the Brisbane River with the two retaining significance as publicly owned utilities.

8.2 Heritage Design Principles

The Terminal building is principally viewed within the setting of the Hardcastle Park "in the round" and from extended distances along the river. Such views constitute the expanded curtilage of the Terminal building and should be taken into consideration for the design of any new structure. Informed by this expanded curtilage and by the significance of the Hawthorne Ferry Terminal, the following heritage principles have been devised as reasonable considerations for the design and location of a new structure:

8.2.1 Curtilage

The immediate curtilage of the building must be maintained and no new structure should be attached the existing building or located within its immediate visual catchment.

The expanded curtilage, i.e. views to and from the Terminal building particularly from the waterscape, should be maintained and will inform the control lines that have been established as design parameters.

8.2.2 Location

The new facility should be visually and physically separated from the existing Terminal building.

8.2.3 Setting

The new facility should acknowledge the established setting of the Terminal building as an element within Hardcastle park, which is visually linked to the commemorative arch, defines the termination point of the axial paths and provides a land marker for the wharf.

8.2.4 Design

A new facility should be respectful to the significance of the Terminal building and present as a clearly contemporary entity that does not imitate the character of the existing building. The design/s should maintain sight lines to the Terminal Building, which may be achieved through the combination of an open structure and appropriate materialistic treatment. The form of the new structure/s should promote or gesture towards the existing Terminal building, possibly executed through the use of suitable roof structure/s that are light-weight and floating above a transparent/semi-transparent mass.

8.3 Proposed Design Options

The new facility should ensure that the significance of the Hawthorne Ferry Terminal as an intact purpose built building within the setting of Hardcastle Park (as well as its continued use) is maintained. Consideration has been given to three design options for the facility including a structure attached to the wharf, a structure in Hardcastle Park and a combination of smaller structures in both locations.

Table 4 Proposed Design Options

Proposal	Design Principles	Outcomes
Option 1- Structure attached to the existing wharf or an extension of the wharf.	A new structure located attached to the wharf and according to the control lines. The design should promote linear views of the Terminal building through the new structure.	***Positive*** Views in the round can be maintained. The location will ensure that there is visual separation and delineation between existing building and new structure. The presence of the wharf building within Hardcastle Park is maintained. ***Negative*** A large structure may be visually dominant. The proposed location may contravene the existing symmetry and may not respect the established axis, which extends from the commemorative arch to the Terminal building and along the wharf.
Option 2- Structure located in Hardcastle Par, separated from the existing wharf building	A lightweight and contemporary structure located in Hardcastle Park and removed from the immediate curtilage of the existing Terminal building.	***Positive*** Removed from the Terminal Building and visually obscured from the waterscape. The immediate and expanded curtilage, including all existing views from the waterscape, can be maintained. A new structure can reinforce significance/axes through the park. ***Negative*** May interrupt the setting of the Terminal Building in, and integrity of, Hardcastle Park.
Option 3- Collection of smaller structures located both attached to the existing wharf and in Hardcastle Park	The proposal will involve construction of two, three or four small structures located attached to the wharf and in Hardcastle Park.	***Positive*** Ability to provide the accommodation required through the provision of smaller structures that may be less intrusive than one mass, attached to the existing wharf and in Hardcastle Park, re-enforcing the axis/axes. ***Negative*** May result in disconnection of individual spaces.

8.4 Recommendations

The execution of Option 1 or Option 2 may involve the concentration of a large structure either in front of, or behind (in the Park) the existing Ferry Terminal Building. As a result, and in order to meet the brief, the siting of the structure may be partially within the immediate curtilage and visual catchment of the Ferry Terminal Building, i.e. within the established control line as indicated on Figure 2 *The proposed*

Hawthorne Ferry Terminal. It is critical that the design principles established to ensure the maintenance of axial and linear views of the Terminal Building, as well as views "in the round" are applied to the new structures and any built form positioned within the control line should appear virtually transparent. These design principles should be carried through to the roof form, which may be opened up/elevated towards the Terminal Building. An encroachment on the immediate curtilage of the Terminal Building may be appropriately compensated by interpretation of the significance of the Hawthorne Ferry Terminal. Option 3, the distribution of individual structures attached to the wharf and in Hardcastle Park may alleviate the visual dominance of one intrusive structure, provided the appropriate design principles are applied.

Appendix A

Brisbane City Council Site Concept Plans



CONCEPT PLAN
SCALE 1:1000 @ A3

SCALE 1:1000

CHECK PRINT - INCOMPLETE REVISION
THIS DRAWING HAS NOT BEEN CHECKED/VERIFIED AND MUST NOT BE RELIED UPON
PLOT DATE Tuesday, 6 October 2009 2:45:42 PM

© Kellogg Brown & Root Pty Ltd

REV	DESCRIPTION	DATE
	REVISIONS	

NOTES

		SIGNATURE
DRAFTING		
DESIGN		
DESIGN VERIFICATION		
PROJECT APPROVAL		
CLIENT		

Kellogg Brown & Root Pty Ltd
KBR
Kellogg Brown & Root Pty Ltd
ABN 91 007 660 317

DRAWING SCALE | ORIG. SIZE A1 | PROJECT No. BEJ908
DRAFTER

TITLE
BRISBANE CITY COUNCIL
TENERIFFE FERRY TERMINAL
CONCEPT LAYOUT
OPTION 2

DRAWING No. SKH-02
REVISION -

D:\G&I\CAD\Projects\BEJ908\Drawings\Sketches\SKH-02.dwg 06.10.09 14:45

BCC.133.0717



CONCEPT PLAN
SCALE 1:1000 @ A3

SCALE 1:1000

CHECK PRINT - INCOMPLETE REVISION
THIS DRAWING HAS NOT BEEN CHECKED/VERIFIED AND MUST NOT BE RELIED UPON
PLOT DATE Tuesday, 6 October 2009 2:43:08 PM

© Kellogg Brown & Root Pty Ltd

NOTES

REV | DESCRIPTION | DATE
REVISIONS

	SIGNATURE
DRAFTING	
DESIGN	
DESIGN VERIFICATION	
PROJECT APPROVAL	
CLIENT	

Kellogg Brown & Root Pty Ltd
KBR
Kellogg Brown & Root Pty Ltd
ABN 91 007 660 317

DRAWING SCALE | ORIG. SIZE: A1 | PROJECT No.: BEJ908
DRAFTER

TITLE
BRISBANE CITY COUNCIL
TENERIFFE FERRY TERMINAL
CONCEPT LAYOUT
OPTION 1

DRAWING No.: SKH-01
REVISION: -

D:\G&I\CAD\Projects\BEJ908\Drawings\Sketches\SKH-01.dwg 06.10.09 14:43

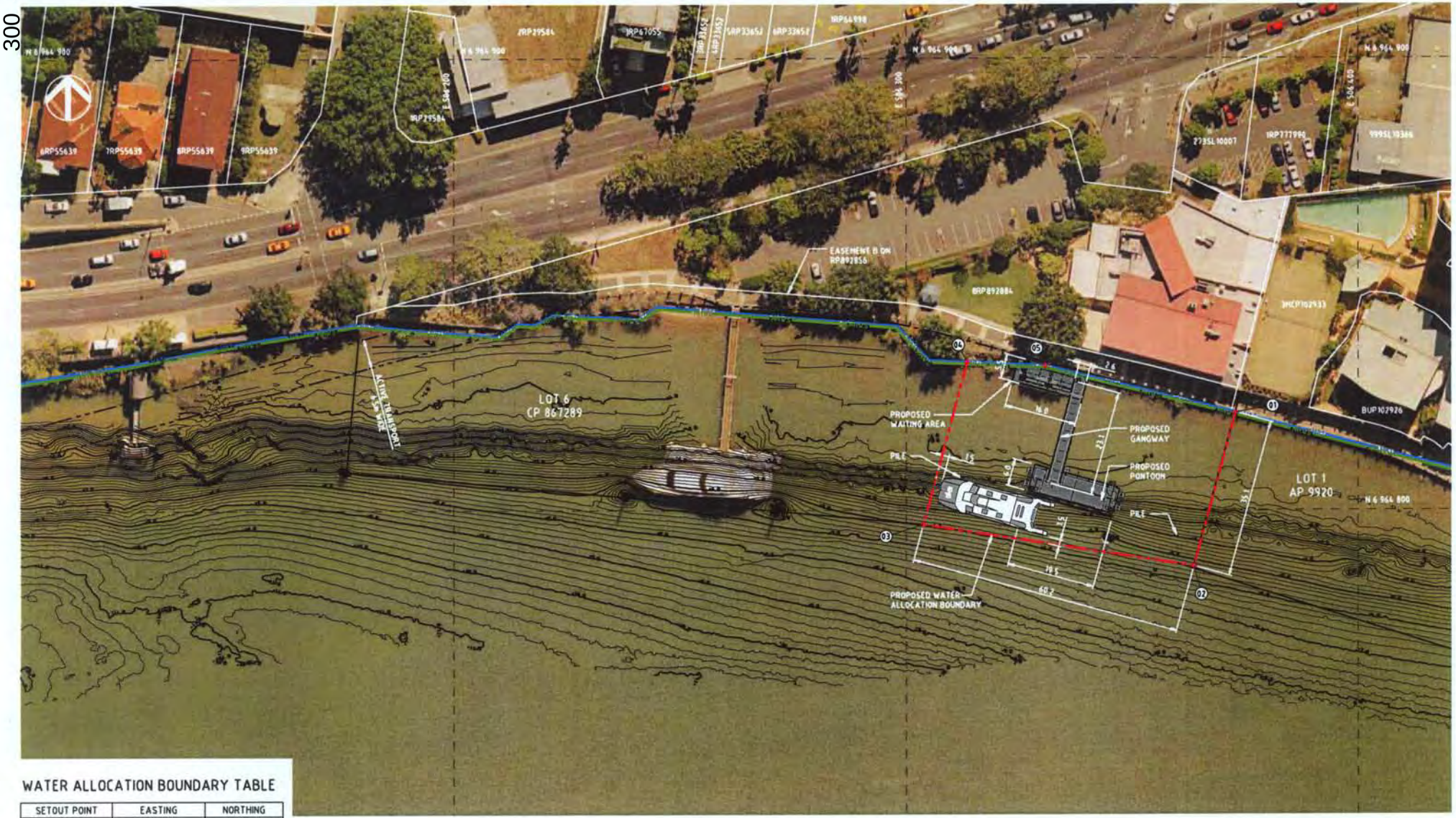

WATER ALLOCATION BOUNDARY TABLE

SETOUT POINT	EASTING	NORTHING
01	506372849.615	6964821466.853
02	506363638.737	6964787561.983
03	506303773.407	6964796834.123
04	506313497.485	6964832628.060
05	506330771.696	6964831829.718

SCALE 1:400

PROPOSED BRETTS WHARF FERRY TERMINAL

SCALE 1:400

NOTES

1. ALL REDUCED LEVELS ARE EXPRESSED IN METRES TO AUSTRALIAN HEIGHT DATUM (AHD).

BCC.133.0719

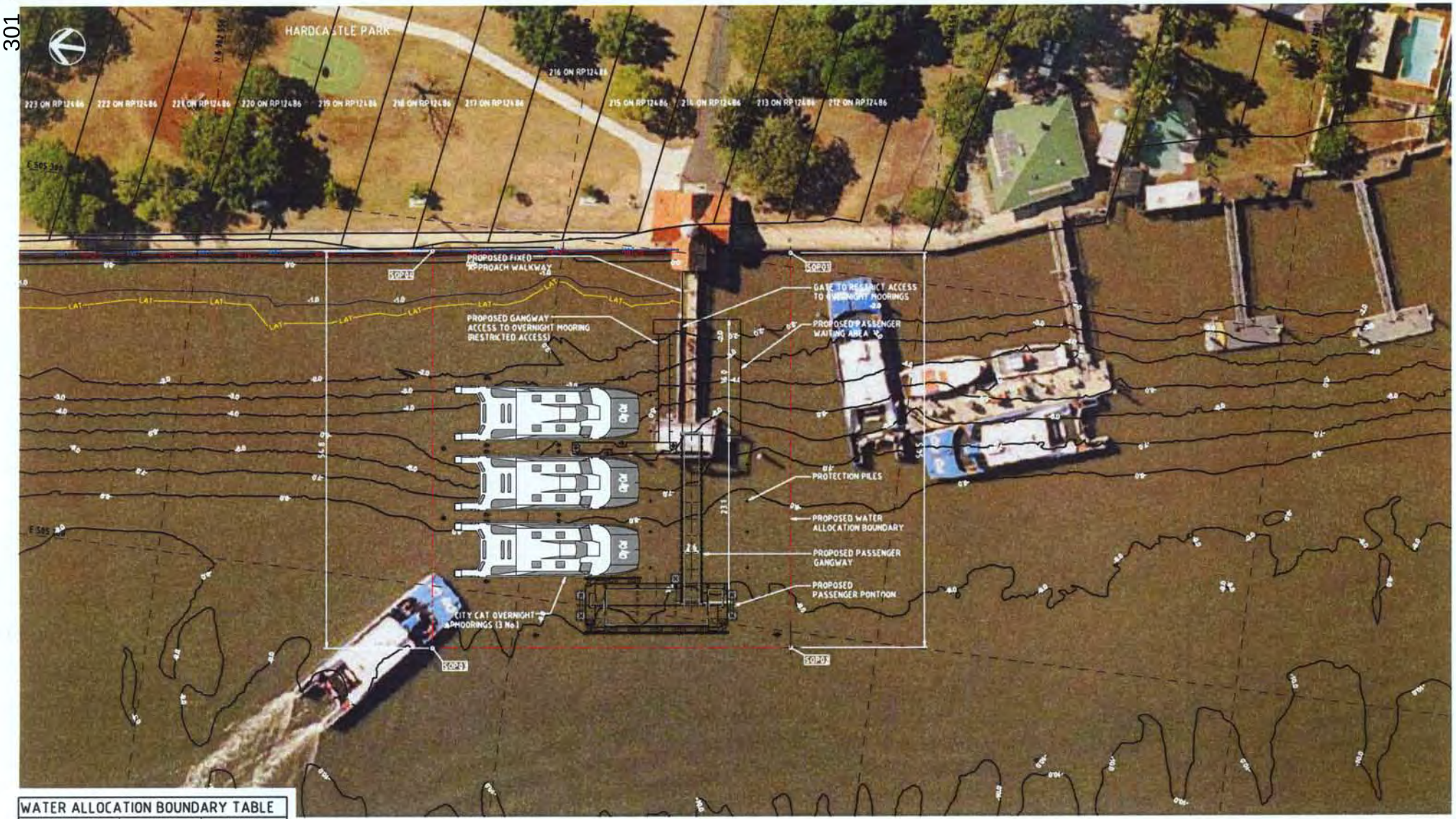

WATER ALLOCATION BOUNDARY TABLE		
SETOUT POINT	EASTING	NORTHING
01	505301.840	6962468.724
02	505247.835	6962461.679
03	505241.443	6962510.672
04	505295.770	6962517.759

PROPOSED HAWTHORNE FERRY TERMINAL WATER ALLOCATION PLAN OPTION 2

SCALE 1:250

NOTES

1. ALL REDUCED LEVELS ARE EXPRESSED IN METRES TO AUSTRALIAN HEIGHT DATUM (AHD).

Appendix B

Table of Information Provided by the Client

GHD

Information supplied by Brisbane City Council

Data required	Received
◗ Proposed terminal drawings	Yes
Information to be provided by the client in AutoCAD format -	
◗ Geotechnical survey	
– Hawthorne terminal	No
– Bretts wharf terminal	No
– Teneriffe terminal	No
◗ Topographic and Hydro graphic survey	
– Hawthorne terminal	Yes
– Bretts wharf terminal	Yes
– Teneriffe terminal	No
◗ Q100 velocity and water levels for the 3 City Cat terminals reach of the river are to be provided by the client	Yes
◗ Drawings of existing rock revetment, detailing ground level, slope and toe level.	Yes
◗ Client brief in relation to the allowable gangway slope and length	No
◗ Confirmation of use or not of fender piles or a pontoon mounted fender system	Yes
◗ Vessels details, including – Length overall (m) – Laden draught (m) – Displacement (tonnes) – Freeboard (m) – Approach Velocity (m/s) – Approach Angle (degrees)	Yes
◗ Required deck level of Pontoon (to meet freeboard of City Cat)	Yes
◗ Previous drawings for 3 city cat terminals, or similar.	No
◗ Constraints on location laterally and at right angles to shoreline (quay-line).	No

Appendix C

BCC – Ferry Terminal Design Specification

BRISBANE CITY COUNCIL
FERRY TERMINAL DESIGN SPECIFICATION
September 2009

1. DESIGN REQUIREMENTS

The principal requirements for the preliminary and detailed design of BCC ferry terminals are specified in the following sections.

1.1 General Requirements:

The pontoon and major components shall have a minimum design life of 50 years. All components shall be designed for low maintenance, maximise off-site pre-fabrication of structures to minimise terminal closure time and to remain in a reasonable condition for the life of the pontoon as well as considering 'whole of life costs'. The system and components shall be suitable for the specified design criteria.

The general design criteria are:-

- To be in accordance with AS4997 "Guidelines for the design of maritime structures", AS3962: 2001 "Guidelines for the Design of Marinas" and all other relevant Australian Standards except where modified by specific requirements of the BCC;
- Be suitable for all CityCat vessels up to 35.5 displacement tonnes;
- To have 900mm minimum unloaded freeboard at passenger door level at all tidal levels;
- The access to the structure shall consist of an aluminium gangway, and walkways where appropriate, supported by a fixed walkway or on-shore by a concrete, or other approved, foundation, with the outer end seated on the pontoon;
- The pontoon and gangway shall have a non slip surface free from longitudinal joints;
- The nominal size, and extent are to be designed to conform to the Disability Discrimination Act (DDA) 1992, Disability Standards for Accessible Public Transport (DSAPT) 2002 and all relevant Australian codes and requirements of relevant Authorities, except where modified by specific BCC requirements;
- The design must incorporate the relevant details of the BCC's Crime Prevention Through Environmental Design (CPTED) Planning Scheme Policy;
- It must allow for efficient management of vessel movement. The design must take into account the operational requirements identified by Council's ferry operator and the Regional Harbour Master, Brisbane;
- The pontoon and pile arrangement must allow for dual berthing of CityCat vessels during operations;
- The pontoon and pile arrangement must allow for overnight mooring of CityCat and/or City Ferry vessels. The number of berths shall be determined based on the physical constraints of the site and consultation with the BCC and Regional Harbour Master, Brisbane;
- The design of all infrastructure must be appropriate for all tidal levels between HAT and LAT and the 1 in 100 year (Q100) flood levels, current velocity and debris loads on all structures, except the articulated gangway and/or where approved otherwise by the BCC. Detailed flood/tidal river current flow analysis will need to be carried out, where not available from the BCC. The impacts of the specific infrastructure on local flooding must be assessed under the Defined Flood Event (DFE) conditions;
- The articulated section of the gangway shall not prevent the pontoon rising during a storm event up to the site specific DFE or Q100, whichever is the highest level;
- Selection of design and materials should be based on "whole-of-life" costs and ease of construction. The design must incorporate pre-fabricated materials and elements that minimise on-site construction time; and
- The design is to be consistent with the objectives for the project listed above.

1.2 Live Loads

Minimum Live Load:

- 5kPa Structural;
- 3 kPa Stability;
- 4.5 kN concentrated load;
- Comply with EPA "Operational Policy – Building and Engineering Standards for Tidal Works"; and
- The requirements of AS3962.

Basic dimensions for mooring design of the 3 generations of CityCats are provided in the following table.

Generation	Length Overall	Maximum Beam	Maximum draft	Displacement	Underkeel Clearance	Windage Area
I	24.95m	7.70m	1.35m	29.05 tonnes	2m at LAT	N/A
II	25.50m	7.60m	1.42m	35.50 tonnes	2m at LAT	Profile: 73m^2 Bow on: 22m^2
III	25.50m	7.60m	1.42m	35.50 tonnes	2m at LAT	Profile: 73m^2 Bow on: 22m^2

The structures must be designed to accommodate the worst case mooring loads of 2 CityCats under full flood conditions, unless approved otherwise by the BCC.

1.3 Berthing Load

Normal Berthing Load
The pontoon and its components need to be designed for the berthing loads arising from the worst case CityCat vessel striking the structure at 15 degrees (to the quay line) at a velocity of 0.5m/sec.

Accidental Berthing Load
The pontoon and its components need to be designed for the berthing loads arising from the worst case CityCat vessel striking the structure at 45 degrees (to the quay line) at a velocity of 3.0m/sec.

1.4 Environmental Loads

The pontoon shall be designed for the following environmental conditions:

Wind Waves: The consultant will be required to calculate the maximum fetch and in order to estimate the design wave heights at the site adopt:

- regional basic design wind three second gust velocities from AS 1170.2:2002, Region B, terrain category 2
- assume a storm duration of 1 hour
- mean wind speeds over the duration of the storm being a conversion of the three second gust from AS 1170.1 using the method in the CEM 2001, Fig II-2-1.

Key assumptions are:

- Perfect coincidence between the flood/storm tide peak, the design wave peak and the design wind peak. This assumption is adopted because the floods, storm tide and wind waves are being generated by the same meteorological event – a tropical cyclone.
- The design wave height is H_1 from AS 4997-2005, Clause 5.9.2, where H1% is the mean of the highest 1% of the waves.

Waves from Vessels: All components of the system shall be designed for the largest waves expected to be produced by vessels using the stretch of the river during the life of the structure, but the design waves shall be no less than 0.6m with a period of 6 seconds, unless approved otherwise by the BCC.

Current Loads: The pontoon system will be designed to the velocities and debris build-up for a Q100 flood. The design flood height and velocity for a Q100 flood at this location is to be in accordance with Q100 for the relevant reach of the river. Consideration shall be given to the DFE level, where this level is greater than the Q100 level, but Q100 current velocity shall be used for design.

The pontoon is required to stay attached to the pile(s) during DFE and Q100 flood levels, but a suitable tethering system may be detailed to retain the pontoon and gangway, if so directed by the BCC.

Tidal Levels: The pontoon is required to be useable throughout all ranges of tidal levels for the closest site of tidal levels published by Maritime Safety Queensland.

Wind: In accordance with AS1170.2 the ultimate limit state wind shall be taken as:-

- Regional Wind speed, Region B, R=500
- Terrain category 2
- Multipliers shall be determined in accordance with the site specific conditions

The design shall account for the maximum size vessel in any position along the pontoon. The vessel wind area shall be calculated based on the windage area of the largest CityCat vessel expected to berth at the terminal. Where this is not available the vessel windage area shall be determined in accordance with AS3962 Table 4.4.

1.5 Serviceability Criteria

The pontoon shall be designed for the following serviceability criteria.

Acceleration: The pontoon shall be designed to have a maximum lateral acceleration at the commuter centre of gravity of $A_h < 2.5 m/s^2$.

Surface: The pontoon surface shall have a non slip surface coating approved by the BCC, with preferential consideration given to Comcork AquaDeck®. The surface shall be Wet Pendulum Test Class V to AS/NZS 4586, Table 2.

Articulation: The pontoon system should be designed so that the pontoon remains on the piles up to and including a Q100 or DFE level, whichever is greater. The RL of the top of the pile, not including the pile cap shall be such that it is 1.0m higher than the pile guide system. The design should also allow for all components of the system to be retained at the site by way of an anchor system designed for all events up to and including the highest flood level, where specifically requested by the BCC. The gangway connection at the walkway or shore abutment shall allow for the raising of the pontoon above the level of the walkway or abutment connection with no permanent damage to all components during flood events.

Vandalism: The pontoon, piles and components shall be designed to be resistant to vandalism.

DDA and DSAPT Compliance: All fixed walkway and waiting area/terminal levels shall be designed to comply with DDA 1992 and DSAPT 2002 at all times, except articulated gangway levels and angles which shall comply with DDA, DSAPT and AS1428.1 for 80% of the time between the Highest Astronomical Tide (HAT) and Lowest Astronomical Tide (LAT).

1.6 Piling to Pontoon and Berthing Piles

The responsibility for the pile design including location and number of restraining piles, correct levelling and setting out of the piles to suit the pontoon system shall rest with the Designer. For the pontoon restraining piles, the finished pile position and rake of the piles shall be such that the operation of the restraint brackets is not impaired over tidal range levels.

BRISBANE CITY COUNCIL
FERRY TERMINAL DESIGN SPECIFICATION
September 2009

General Requirements:

- Provide piles consistent with the design and the ferry operational requirements of the terminal;
- Location, number and impact capacity of piles are to be determined based on consultations with Council and Council's ferry operator, and in accordance with the relevant Australian codes;
- Provide piles configured to enable safe docking of a 12-metre cross-river ferry and worst case CityCat loads and overnight mooring of two CityCats, in consultation with the ferry operators;
- Maintenance of the wearing components of the piles is not to interrupt ferry operations and to be designed to minimise maintenance;
- A scour and accretion allowance will need to be considered. These allowances will be dependent on geotechnical investigations that have occurred to date and environmental conditions;
- Design moveable elements on the piles that minimise nuisance noise to surrounding properties;
- All piles shall be specified to be driven, bored or jetted into final position in the locations and within the nominated tolerances; and
- The pile design shall be based on the geotechnical information supplied by the BCC or other geotechnical information approved by the BCC.

Specific and Other Requirements:-

Materials: Council's preference is for steel piles, either hollow or concrete filled depending on the optimal cost and design solution, with appropriate cathodic protection. All piles shall have suitable PVC, Polyethylene or GRP pile caps.

For concrete filled piles, the concrete filling shall be tremmied to the bottom of the closed pile section and adequate vibration provided to ensure sound dense concrete. A steel reinforcement cage should only be incorporated in the design where it is demonstrated that there is a clear cost and constructability advantage for the structure.

For reinforced concrete piles, concrete shall be minimum 50MPa and minimum cover to reinforcement shall be 50mm. All concrete pile design shall be in accordance with AS3600 and other relevant Australian Standards.

Unreinforced concrete piles will not be accepted.

Cathodic Protection: For steel piles a cathodic protection shall be incorporated in the design for a minimum 10 year design life. Minimum requirements shall be piles painted with Interzone 485, or other specialist marine paint system approved by the BCC, and suitable zinc or aluminium anodes. Corrosion protection paint shall be applied under controlled conditions in strict accordance with the manufacturer's recommendations. Impressed current systems shall only be incorporated where approved by the BCC.

Fender System: The piles shall have a suitable fendering system suitable to protect the piles and boats from damage over all tidal conditions and wave action. Rubber fenders shall be supplied by a reputable and recognised fender manufacturer such as Trelleborg or Bridgestone. Fender design shall be in accordance with PIANC document "Guidelines for the design of fender systems" 2002, unless otherwise approved by the BCC. Fender systems shall have HDPE or UHMW-PE facing.

Fender chains, shackles and associated accessories shall be hot dipped galvanised for a minimum 10 year life, unless otherwise approved by the BCC.

Timber fenders and Fibre composite fenders, or facing, will not be accepted, unless otherwise approved by the BCC.

Other Pile Types: Concrete, fiber composite, timber or other pile types shall only be incorporated in the design with the approval of the BCC.

Other Pile Protection: Pile protection by HDPE sheathing shall only be used with the approval of the BCC. Where approved, HDPE sheathing shall:-

- be fully sealed at the top of sheathing;
- designed so no movement occurs due to vessel or debris impact;
- penetrate into the riverbed for a minimum distance of two (2) metres to ensure a watertight seal; and
- be fixed so the sheathing does not move due to riverbed scour or accretion.

Location and Clearance: Restraining piles shall be located outside the pontoon area and are to be located along the front and end faces of the pontoons. Consultation shall be undertaken with the Ferry Operator's, Regional Harbour Master and the BCC for locations of berthing and mooring piles.

1.7 Pontoon

General Requirements:

- The Pontoon shall be designed and constructed from new steel, with concrete ballast, to Australian Standards. A pontoon designed as primarily concrete, primarily concrete with foam ballast, aluminium or other primary materials shall only be incorporated in the design with the BCC's prior approval. Concrete ballast shall have minimum reinforcing to prevent shrinkage;
- Design, ballasting and fixing of the pontoon to allow vertical movement, to control movement in the horizontal plane due to waves and tidal flow, and to minimise eddying and drag forces;
- Design to be based on normal peak tides, the Q100 current velocity and the greater of the Q100 or DFE flood levels;
- Provide ready, watertight, internal access for maintenance including connection points for release of carbon dioxide and pumping of oxygen into pontoon hull(s);
- Provide for easy removal of the pontoon and gangway for maintenance;
- Provide berthing bollards on the pontoon that allow safe tie-off at all times (without assistance from engine);
- Provide for day-to-day maintenance so as to not interrupt ferry operations;
- Design moveable elements of the pontoon, gangway and walkway to minimise nuisance noise to surrounding properties;
- Provide potable water outlet for maintenance purposes of both facility and ferries; and
- Provide cover and lighting for boarding and alighting passengers consistent with other BCC terminals.

Specific and Other Requirements:-

Bulkheads: For hollow pontoons at least 1 bulkhead shall be incorporated to create 2 separate watertight compartments. In the event of the pontoon sinking, provide for the ability for the pontoon to be retrieved. A water pump-out connection system shall also be incorporated into the design.

Corrosion Protection: Provision shall be incorporated in the design to prevent the creation of galvanic cells between dissimilar metals. For a steel pontoon, the minimum cathodic protection shall comprise of the following for a minimum 10year design life:-

- all exterior steel painted with a specialist marine paint system and suitable zinc or aluminium anodes attached to the exterior of the pontoon,
- all interior steel painted with a specialist marine paint system OR suitable zinc or aluminium anodes.

Tolerance: The pontoon shall be manufactured to the following dimensional tolerances:

- Width and height +/- 5mm
- Out of square +/- 5mm

Restraint: The pontoons shall be restrained by the use of HDPE rubbing blocks in grade 316 stainless steel brackets, around the pontoon piles. Provision shall be incorporated in the design to prevent the creation of a galvanic cell between dissimilar metals. The use of aluminium, in lieu of grade 316 stainless steel, will not be accepted.

Secondary Restraint: The pontoons may be fitted with flood restraint chain(s) with a capacity to prevent the pontoon from being washed away during flood events greater than Q100 flood event. The need for a secondary restraint shall be based on the specific site conditions.

Mooring Cleats: Aluminium or stainless steel mooring cleats shall be fitted to the pontoon at a maximum of 3 metre centres. Provision shall be incorporated in the design to prevent the creation of a galvanic cell between dissimilar metals.

Uniform Displacement: The pontoon shall sit level in the water with uniform freeboard on all sides when loaded by the gangway dead load at mid tide. The pontoon deck shall be designed that no ponding of fluids occurs.

Fixing:

- All bolts shall be Grade 316 (UNS S31600) A4-70. Nuts shall be Grade 316 (UNS S31600). Washers shall be 316 (UNS S31600), electropolished or passivated;
- Nuts and bolts shall comply with ISO 3506 identifications or, if not so marked, shall be provided with mill or NATA certified test result confirming grade strength;
- Bolts shall have rolled threads. The nuts and washers shall be electropolished or passivated in nitric acid; and
- Bolts shall be tightened to the manufacturer's recommended torque using a torque wrench. Nuts shall be lubricated with an anti-seize, nickel based lubricant subject to the approval of the superintendent.

Handling of stainless steel: Stainless steel material should not be stored with carbon steel. Tools used for carbon steel shall not be used to fabricate or assemble stainless steel components.

Fender System: The berthing pontoon shall have a suitable fendering system suitable to protect the pontoon and boats from damage over all tidal conditions and wave action. Fenders shall be rubber with HDPE or UHMW-PE facing. Rubber fenders shall be supplied by a reputable and recognised fender manufacturer such as Trelleborg or Bridgestone. Fender design shall be in accordance with PIANC document "Guidelines for the design of fender systems" 2002, unless otherwise approved by the BCC.

Fender chains, shackles and associated accessories shall be hot dipped galvanised for a minimum 10 year life, unless otherwise approved by the BCC.

Timber fenders and Fibre composite fenders will not be accepted, unless otherwise approved by the BCC.

Gangway landing: The gangway shall land on the pontoon in a recess such that the gangway finishes level with the pontoon deck. A stainless steel or aluminium cover plate shall be provided to cover the

gap between the gangway and pontoon, with a replaceable wear plate included on the pontoon deck.

Ladder: At least two access ladders shall be provided on the pontoon.

Fire Protection: No provision is required for fire protection or prevention equipment however the design shall consider the use of materials that minimize fire risks.

Roofing: Roofing material shall be Lysaght Longline 305®, unless otherwise approved by the BCC.

Fencing: Stainless steel or powder coated mesh fencing, unless otherwise approved by the BCC.

1.8 Walkways and Gangway

General Requirements

- Ensure passenger movements are efficient with an emphasis on embarking and disembarking;
- Be fully DDA and DSAPT compliant for two way access including all cambers, crossfalls etc;
- Be adjustable to accommodate differing ferry deck heights and to have minimal gap between the pontoon and the vessel;
- Have minimal independent movement due to wave action;
- The gangways shall be of aluminium construction, unless otherwise approved by the BCC;
- Provide cover and lighting for boarding and alighting passengers. Some sections of roofing may be designed to be sacrificial under full flood debris load with the approval of the BCC; and
- Be designed to allow passengers to line-up on the gangway.

Specific and Other Requirements

Slope: Levels and angles shall comply with DDA, DSAPT and AS1428.1 for 80% of the time between the Highest Astronomical Tide (HAT) and Lowest Astronomical Tide (LAT);

Materials: The gangway should be designed to:

- Incorporate aluminium, stainless steel or powder coated mesh fencing, unless otherwise approved by the BCC;
- Incorporate Lysaght Longline 305® roofing, unless otherwise approved by the BCC. Some sections of roofing may be designed to be sacrificial under full flood debris load with the approval of the BCC; and
- Provide step-free, Comcork AquaDeck® non-slip walking surfaces with covered flaps at all moving connections, unless otherwise approved by the BCC;

Handrails:

- The gangways shall have handrails 1100 high both sides, shall be provided with childproof infill and fencing and designed in accordance with DDA, DSAPT and AS1428.1 requirements;
- The minimum width inside handrails shall comply with the requirements of DDA, DSAPT and AS 1428;

Gaps: The junctions between the gangways, the headstock and in-situ landing and pontoon shall not present a trip hazard. Maximum gap between separate structures shall be 10mm.

1.9 Electrical

- Comply with all relevant Australian Standards, in particular AS/NZS 3004.1, the Queensland electrical safety act and other relevant Legislation;
- Earth all metal structures and provide signage to that effect;
- Materials should be corrosion resistant and/or cathodically protected;
- At least 1 double general power outlet with spring loaded protective cover shall be provided on the pontoon;
- At least 2 double general power outlets with spring loaded protective cover in the waiting area;
- All general power outlets shall be concealed from public view;
- A separate metered switchboard including:-
  - Lockable 316 stainless steel cabinet (Energex keyed);
  - at least 1 double general power outlet;
- Provide a control system, to manage navigational and other lighting; and
- Laying of segregated communications and data cabling conduits for future installation of electronic ferry arrival, CCTV, passenger help points and information displays and electronic ticketing machines, as required by the BCC.

1.10 Lighting

Lighting shall be designed in accordance with relevant DDA and relevant Australian standards with preference given to low energy lighting options. All lighting and electrical components shall be Australian assembled and readily available for maintenance and replacement. The preferred lighting is directed downwards onto the gangway and pontoon. The lamp shall not create a glare nuisance for traffic on the river, adjacent properties, or for vessels berthing on the pontoon.

- Lighting levels within the waiting areas and on the walkway and gangway are to be minimum of 150 lux 12 months after the commencement of operations with the glare to be managed so as not to interfere with navigation or adjacent properties;
- Safe lighting levels are to be achieved in all other areas, particularly access to the Terminal and in accordance with the relevant codes;
- Provide emergency lighting;
- Lighting shall be easily accessible for maintenance purposes;
- Provide navigational lighting in accordance with the Regional Harbour Master's requirements;
- Provide light onto piles and to the edge of the pontoon to meet ferry operational needs; and
- Include relevant lighting requirements of the CPTED planning scheme policy.

1.11 Accessibility

- Ensure access to the site and all areas of the ferry terminal satisfy Council's accessibility policies and obligations;
- Obtain certification from an independent accredited Consultant that the proposed design does, and the completed ferry terminal will, meet the appropriate DDA and relevant Australian codes;
- Ensure efficient access for passengers, ferry operator's and maintenance crews;
- Allow sufficient space for disabled passengers to clearly pass at all areas of access ways; and

- Ensure passenger and vessel movements on the pontoon, access ways and terminal are efficient.

1.12 Safety and Security Features

- Include the relevant requirements of the CPTED planning scheme policy;
- Passive design is to be primary means of ensuring user safety and ferry terminal security including minimisation of vandalism;
- Provide for safe ferry operations with appropriate approvals given by qualified Workplace Health and Safety officers in the field of Marine Engineering;
- Ensure the site and the ferry terminal is accessible for emergency services;
- Ensure design prohibits unauthorised access to any ferries moored at this location overnight, such as a lockable security gate; and
- Provide security and passenger hold-point gates on the pontoon, gangway, walkway and terminal as directed and approved by the BCC.

1.13 Environmental Issues

- Provide tanks to collect rainwater from structures for cleaning/maintenance with mains backup, where required by the BCC. A tap shall be included for hose connection and consideration shall be given to ensuring adequate pressure;
- Capture and treatment of runoff from cleaning and maintenance procedure, where required by the BCC;
- Compliance with necessary environmental approvals and permits;
- Consider any noise amelioration measures;
- Design to consider and minimise the effects on any adjacent riverwalls, erosion protection structures and stormwater outlets of day-to-day operations; and
- Design should take into consideration the impact of services on neighbouring properties, if applicable.

1.14 Waiting Area

- Provide a see-through, aesthetically lightweight structure;
- Be environmentally sympathetic to the surrounding structures;
- Be easy to clean and maintain;
- Incorporate built in vandal-resistant materials;
- Provide passenger cover and shelter from the elements with Lysaght Longline 305® roofing, unless otherwise approved by the BCC. Some sections of roofing may be designed to be sacrificial under full flood debris load with the approval of the BCC;
- Provide natural ventilation for summer months;
- Provide the Comcork AquaDeck® non-slip, free-draining decking system for all walk surfaces, unless otherwise approved by the BCC;
- Provide stainless steel or powder coated mesh fencing, unless otherwise approved by the BCC;
- Provide sufficient waiting area space and seating for the projected levels of patronage;
- Facilitate litter and debris containment including provision of rubbish bins;
- Treatment of rain and cleaning water run-off, as directed by the BCC;
- Install a clock with emergency power backup which is visible to passengers in the waiting area and

when reading the information board; and

- Provide crowd-control elements which retain waiting passengers within the waiting areas until disembarking passengers have cleared the pontoon and/or gangways.

1.15 Information and Signs

- Provide prominent signage showing the name of the ferry terminal, visible day and night, from the land and water;
- Provide static timetable cases for ferry and nearby bus services and operational information, in consultation with Urban Transport and Council's ferry operator. This design shall be in accordance with the limitations imposed by the conservation plan for the existing pavilion;
- Provide all necessary signs including directional signs, safety signs and locational plans that have some multi-lingual content and meet the needs of the sight-impaired and comply with Australian Standards AS 1428.1 (2001), AS 1428.2 (1992) and AS1482.4;
- Provide "no smoking" signs at the entry to the facility mounted over appropriate disposal containers; and
- Signs are to be consistent with public transport sign standards. Council's ferry operator should be consulted in relation to their standard signage and ground marking rollout.

1.16 Landscaping

- Determine opportunities to provide landscaping to enhance the surrounding environment;
- Landscaping is not to diminish passenger safety;
- Provide relevant street/park furniture including garbage bins, as directed by the BCC; and
- Provide bike storage racks as otherwise directed by the BCC.

1.17 Transport Interfaces

- Provision of passenger set down facilities at the Terminal, particularly addressing safety concerns for pedestrians;
- Provide safe and accessible interface of abled and disabled ferry passengers and bikeway users both on and off the facility; and
- Provision of 1 to 2 crew car parks at or near the ferry terminal, where possible.

1.18 Design Documentation

The designer shall submit to the BCC the following minimum design documentation:-

- Design basis report prior to commencing detailed design;
- Concept layouts and Water Allocation Area Plan for MSQ approval;
- IDAS approvals drawings;
- Construction Issue drawings; and
- Construction specifications.

Submission timings shall be agreed with the BCC prior to commencing design. The requirements of the Consultancy Brief shall take preference to the documentation listed above.

1.19 Discrepancies

Any discrepancies between this specification and any relevant Australian Standards, Government legislation and/or BCC legislation, standards and policies should be brought to the attention of the BCC for clarification prior to commencing design.

Appendix D

Approvals Register

Approvals Register for 3 CityCat Ferry Terminals - Hawthorne, Newstead & Hamilton

Reference	Requirement	Assessment Manager	Applicable Legislation / Codes	Decision Period / Assessment Timeframe	Project Phase Timing Requirements	Required Prior to Lodgement	Frequency	Timing Implications	Application Preparation Timeframe	Required Reports and Supporting Information	Currency Period
Commonwealth Approvals											
Native Title											
Native title Suppression pursuant to 24KA of the Native Title Act 1993	TRIGGER: Unallocated State Lands on which Native Title has not been extinguished	N/A	**Native Title Act 1993 (Federal)**	1 Month	Planning Phase	N/A	Once	Prior to issue of any and all state approvals.	3 Months	Native Title Claim searches.	Permanent for the life of the project.
State Approvals Overarching											
Resource Entitlement (state land or state resource) / Owners Consent											
IPR schedule 10 item 6	Land that is unallocated state land under the *Land Act 1994*	DERM - (NRW)	**Land Act 1994**	4-6 Weeks	Design Phase	Yes	Once for each location.	Prior to lodgement of IDAS Operational Works Application for Prescribed Tidal Works	1 Week	Development footprint / Concept Design Drawings.	6 months from date of issue.
Resource Allocation (state land or state resource) / Owners Consent											
IPR schedule 10 item 10	Quarry material taken under the *Coastal Management Act 1995*	DERM - (EPA)	**Coastal Management Act 1995**	4-6 Weeks	Design Phase	Yes	Once for each location.	Prior to lodgement of IDAS Operational Works Application for Prescribed Tidal Works	1 Week	Development footprint / Concept Design Drawings, amount of material to be extracted.	6 months from date of issue.
Cultural Heritage											
Under Section 23(1) of the Aboriginal Cultural Heritage Act 2003,	Preparation of a formal Cultural Heritage Management Plan (CHMP) or a Cultural Heritage Management Agreement (CHMA).	DERM - (NRW)	**Aboriginal Cultural Heritage Act 2003**	5 Months	Design Phase	N/A	Once	Prior to any construction.	3 Months	Archaeological reporting including an agreement between the proponent and an Aboriginal party outlining how the project will be managed to avoid harm to Aboriginal cultural heritage and to the extent that harm cannot reasonably be avoided, to minimise harm to Aboriginal cultural heritage.	Continuous / ongoing throughout the life of the project.

Portable Long Service Leave Levy (PLSL)											
	Payment confirmation for the applicable PLSL levy with respect to the estimated project works	**Qleave**	**Building and Construction Industry (Portable Long Service Leave) Regulation 2002**	N/A	Design / Construction Phase	Yes (Operational Works)	Once (per works phase)	Prior to approval of IDAS Operational Works Applications	N/A	Cost estimate of the project works.	Ongoing
IDAS APPROVALS											
Material Change of Use - Landing (Public)											
Brisbane City Plan Scheme section 3.1 table 1	TRIGGER: Use of premises for Landing and involving building work	**Brisbane City Council**	**City Plan 2000**	4 - 6 Months Impact Assessment	Planning / Design Phase	Resource Entitlement and/or Owners Consent	Once	Prior to start of construction related activities.	2 Month	Detailed Concept Design Plans List operational methodology and safety systems. Detail associated environmental management procedures and mitigation measures as required including: Noise / Marine Ecology / Sustainability / Surrounding Land Use / Visual Amenity / Contaminated Land / Geotechnical / Stormwater Management / Water Quality / etc Assessment Against Planning Scheme Codes: Bulimba District Local Area Plan, Newstead and Teneriffe waterfront Local Plan, Landing Code Waterway Code, Light Nuisance Code, Non-Discriminatory Access and Use Code, Brisbane River Corridor Planning Scheme Policy.	4 years starting the day the approval takes effect.

Operational Works – for Tidal work (Prescribed tidal Works) or Work within a Coastal Management District											
IPA Schedule 8 Table 4 Item 5	TRIGGER: Operational Work that is Tidal Work completely within a single local government tidal area.	**Brisbane City Council** **Also referred to DERM - (EPA)**	**Coastal Protection and Management Act 1995** **Transport Operations (Marine Safety) Act 1994**	4 Months	Planning / Design Phase	Resource Entitlement and/or Owners Consent	Once	Prior to start of construction related activities.	1 Month	Detailed Site Plan / Concept Design.	2 years starting the day the approval takes effect.
Operational Works – for Removal, Destruction or Damage of Marine Plants											
IPA Schedule 8 Table 4 Item 8	TRIGGER: Removal or destruction of marine plants.	**DEEDI - (DPI & F)**	**Fisheries Act 1994**	4-6 Months	Planning / Design Phase	Resource Entitlement and/or Owners Consent	Once	Prior to start of construction related activities.	1 Month	Detailed Site Plan / Concept Design / Outline quantities and type of marine plant disturbance / Detail associated revegetation and general environmental management procedures and mitigation measures.	2 years starting the day the approval takes effect.
Development for Quarrying in a Watercourse or Lake											
IPA Schedule 8 Table 5 Item 1	All aspects of development for removing quarry material from a watercourse or lake, if an allocation notice is required under that Act.	**DERM - (NRW)**	**Water Act 2000**	4-6 Months	Construction Phase	Resource Entitlement and/or Owners Consent	Once	Prior to this activity commencing	1 Month	Detailed Site Plan / Concept Design / Outline quantities and type of material to be extracted / dredged Proposed raw stockpile storage volumes and method of processing / List operational methodology and safety systems / Detail transportation requirements and safety procedures / Detail associated environmental management procedures and mitigation measures as detailed above.	2 years starting the day the approval takes effect.

Development on Queensland Heritage Place											
IPA Schedule 8 Table 5 Item 2	TRIGGER: All aspects of development on a Queensland Heritage place.	DERM - (EPA)	**Queensland Heritage Act 1992**	4-6 Months	Planning / Design Phase	Resource Entitlement and/or Owners Consent	Once	Prior to start of construction related activities.	1 Month	Detailed Site Plan / Concept Design / Outline proposed architectural treatments.	4 years starting the day the approval takes effect.
POSSIBLE IDAS APPROVALS											
Material Change of Use - Environmentally Relevant Activities - ERA 16 Extractive Activities (May not be required)											
IPA Schedule 8 Table 2 Item 1	**Approval to conduct ERA 16 Extractive Activities** TRIGGER: Dredging, Extractive and screening of: (a) dredging a total of 1000t or more of material from the bed of naturally occurring surface waters, in a year; (c) extracting, other than by dredging, a total of 5000t or more of material, in a year, from an area other than a wild river area; (d) screening 5000t or more of material in a year.	DERM - (EPA)	**Environmental Protection Act 1994**	4 Months	Design Phase	Resource Entitlement and/or Owners Consent	Once	Prior to this activity commencing	1 Month	Detailed Site Plan / Concept Design / Outline quantities and type of material to be extracted / dredged Proposed raw stockpile storage volumes and method of processing / List operational methodology and safety systems / Detail transportation requirements and safety procedures / Detail associated environmental management procedures and mitigation measures as detailed above.	4 years starting the day the approval takes effect.
Material Change of Use - Contaminated Land Management (May not be required)											
IPA Schedule 8 Table 2 Item 5	TRIGGER: Making a Material Change of Use of premises if all or part of the land forming part of the premises is on the Environmental management register or contaminated land register.	DERM - (EPA)	**Environmental Protection Act 1994**	4 Months	Design Phase	Resource Entitlement and/or Owners Consent	Once	Prior to this activity commencing	1 Month	Owners consent and/ or evidence of resource entitlement Detailed Site Plan Concept Design Outline quantities of soils to be disturbed Proposed environmental management, stockpile storage, remediation method List operational methodology and safety systems. Detail transportation or disposal requirements and safety procedures Detail associated environmental management procedures and mitigation measures as detailed above.	4 years starting the day the approval takes effect.

NON-IDAS APPROVALS & PERMITS											
Natural Asset Local Law (NALL)											
Local Government By-Law	TRIGGER: Damage to or removing mapped NALL vegetation.	**Brisbane City Council**	**Local Government Act 2009**	1 Month	Design Phase	Resource Entitlement and/or Owners Consent	Once	Prior to start of construction related activities.	1 Month	Detailed Site Plan / Concept Design / Outline quantities and type of plants to be disturbed / Detail associated revegetation and general environmental management procedures and mitigation measures.	2 years starting the day the approval takes effect.

320

Appendix E

Brisbane City Council Assessment of Disability Access consideration

ADDENDUM COVER PAGE

REFERENCE NUMBER:	**E100072b-09/10**
DESCRIPTION:	**Detailed Design and Documentation for 3 CityCat ferry terminals**

ADDENDUM NO. 2.....

ISSUED: 21/10/2009

Addendum No.1 in response to questions from Invited Design Consultants.

Question 1 –

In preparation of Schedule C (Sub-Contractor's/ Sub-Consultant) for the above project should we include relevant CV's for our nominated sub-Consultants in this section or Schedule B?

BCC Response to Question 1 –

Please include in Schedule B so all CV's and project team are together. Schedule C is just a statement of what roles sub-contractors will undertake.

Question 2 –

Clarification of DSAPT compliance of gangway angles and landings.

Could you please confirm that the independent certification required by clause 1.11 of Appendix D will be acceptable if it is subject to our interpretation of DSAPT?

BCC response to Question 2 –

We do not need landings on the gangways. The reasoning for this is as follows:-

- DSAPT 2002 states that the gangway must be equal to or less than a slope of 1:14 for 80% of the full tide range (HAT to LAT)
- Section 5.3 of AS1428.1 requires landings every 9m for ramp slopes of 1:14 and Section 8.1 of AS1428.2 requires landings every 6m for ramp slopes of 1:14
- Section 4.9 of AS1428.1 states that a landing shall have a maximum gradient of 1:40.
- It is impossible for a hinged gangway to comply with the 1:40 requirement and if we have a landing, at higher tides, the landing would become a tripping hazard. Informal discussions with the human rights commission and local disability advocates on the matter have been useful, and these bodies are satisfied with Councils approach.

Independent certification will be acceptable based on the above clarification of gangway angles and landings.

ADDENDUM COVER PAGE

REFERENCE NUMBER:	**E100072b-09/10**
DESCRIPTION:	**Detailed Design and Documentation for 3 CityCat ferry terminals**

ADDENDUM NO. 3.....

ISSUED: 23/10/2009

Addendum No.3 in response to questions from Invited Design Consultants.

Probity Reminder to all Tenderers

Prospective tenderers are reminded that all correspondence must be directed to Council's Liaison Officer, Mr Ashley Horneman, as stated in the Request for Quotation. All queries to Council must be from the Tenderers designated contact only. This includes any third parties Tenderers may deal with in preparing their response.

Under Council's probity and procurement rules, queries to other Council employees are prohibited and may result in disqualification.

Question 1 –

A further question has been asked in reference to Question #2 in Addendum #2 with regard to Invited Design Consultants.

- Council's response to Q2 states that landings on the gangways are not required. Section 5.3 of AS1428.1 states that landings shall be provided at the top and bottom of the ramp and at intervals not exceeding the following:
  (i) For ramp gradients of 1 in 14 .....9 m.
  (ii) For ramp gradients of 1 in 20 .....15 m.
  (iii) For ramp gradients between 1 in 20 and 1 in 14, at intervals that shall be obtained by linear interpolation.

  Addendum #2 also referenced Section 8.1 of AS1428.2 that states that landings are required every 6m for ramp slopes of 1:14 and refers back to the aforementioned AS1428.1 requirements. Neither of these standards allow concessions for gangways with no intermediate landings.

  The Design Requirements described in the Consultancy Brief requires Consultants design and document to compliance with DDA and DSAPT standards and that we certify the structures accordingly.

  Can Council please advise if the standards are interpreted to mean if we do not design landings on the gangways that are subject to AS1428 Part 1 and Part 2 and required thereof, we may not be able to certify the structures under the DDA and DSAPT standards as compliant?

- It was also indicated in Addendum #2 that informal discussions with the human rights commission and local disability advocates that they are satisfied with Council's approach to this issue.

  In response to this, and in consideration to a potential situation where certification may not be obtained for compliance to DDA and DSAPT standards, would Council be willing to consider amending the Consultancy Brief accordingly?

BCC Response to Question 1 –

Council has been investigating this issue for many years and consulted numerous individuals on this particular matter.

The 'informal discussions' between Council, the Human Rights Commission and others, refers to informal discussions focussing on which tide range was referred to in DSAPT. The worst case range of HAT to LAT was chosen.

The subject of the inapplicability of fixed landings on pontoon ramps in tidal locations was raised. It was agreed that a single run of ramp without fixed landings was an infinitely better outcome than inserting fixed landings whose grade would vary with the tide. This was not a diminution of DSAPT; only an acknowledgement that fixed landings on a pontoon ramp are a liability at certain tide levels.

Floating landings have not been considered an option thus far but have certainly been considered. The chief disincentive to their use is the significant engineered structure required to resist flood, debris and storm loads, and the significantly higher maintenance required on the moving components. This would also be applicable to zig-zag style ramps which are likely to have multiple moving joints.

Furthermore, considering the HAT to LAT tidal ranges, gangways with landings would extend significantly further towards the middle of the Brisbane River and beyond the maximum allowable quayline as determined by the Regional Harbour Master (RHM). The RHM is responsible for the safety of all maritime traffic on the Brisbane River, and any structures that are determined by the RHM to pose a navigational hazard by extending beyond the quayline into the safe navigable channel will not be approved. As experienced consultants will be aware, as a part of the Development Assessment approval process the RHM's consent is mandatory. At some sites the quayline is very close to the riverbank and it would not be possible to construct a DSAPT compliant terminal that does not extend beyond the quayline, including zig-zag style walkways.

Council will not consider construction of ramps without landings at other than ferry pontoon gangways.

At those 20% of times when ramp grade exceeds 1:14, the ferry operator will offer direct assistance, with the deck hand available to help when requested. From discussion with the operator this occurs very occasionally at the older non-compliant terminals.

In addition, Section 33 of DSAPT provides flexibility to provide other than DSAPT prescribed solutions, on the condition that those solutions do not disadvantage the disabled public. In the case of the pontoon ramps we believe that we meet equivalent access as per specific parts of Section 33.

Based on our consultation, advice and consideration, Council will not be amending the requirements of the Consultancy Brief.

Question 2 – Does Council know of any accredited accessibility consultants that have been used in the past to provide similar independent certification?
BCC Response to Question 2 – Council can not provide specific names of specific accessibility consultants. Suitable consultants may be found at http://www.access.asn.au/, however Tenderers are encouraged to seek an accessibility consultant with some experience with structures subject to tidal movement.
Question 3- Request for data listed in Section 7 of the Consultancy Brief refers to data that may be requested during the tendering phase.
BCC Response to Question 3 – Council can only provide a limited amount of data at this stage, however the full set of listed data is anticipated to be available at contract award. The only exception being river boreholes for Teneriffe which may not be available until mid-December, however tidal zone borehole data will be available for Teneriffe. Selected details of currently available data can be downloaded from the e-tender box.

GHD

201 Charlotte Street Brisbane QLD 4000
GPO Box 668 Brisbane QLD 4001

[redacted]

© GHD 2009

This document is and shall remain the property of GHD. The document may only be used for the purpose for which it was commissioned and in accordance with the Terms of Engagement for the commission. Unauthorised use of this document in any form whatsoever is prohibited.

Document Status

Rev No.	Author	Reviewer		Approved for Issue		
		Name	Signature	Name	Signature	Date
0.	Various Authors	[redacted]		[redacted]		26.11.09
1	Various Authors					3.12.09

BRISBANE RIVER FERRY TERMINAL

DESIGN COMPETITION | STAGE 2

Concept Design Proposal | July 2011

COX RAYNER derlot aurecon Queensland Government



"ASH-10"

329

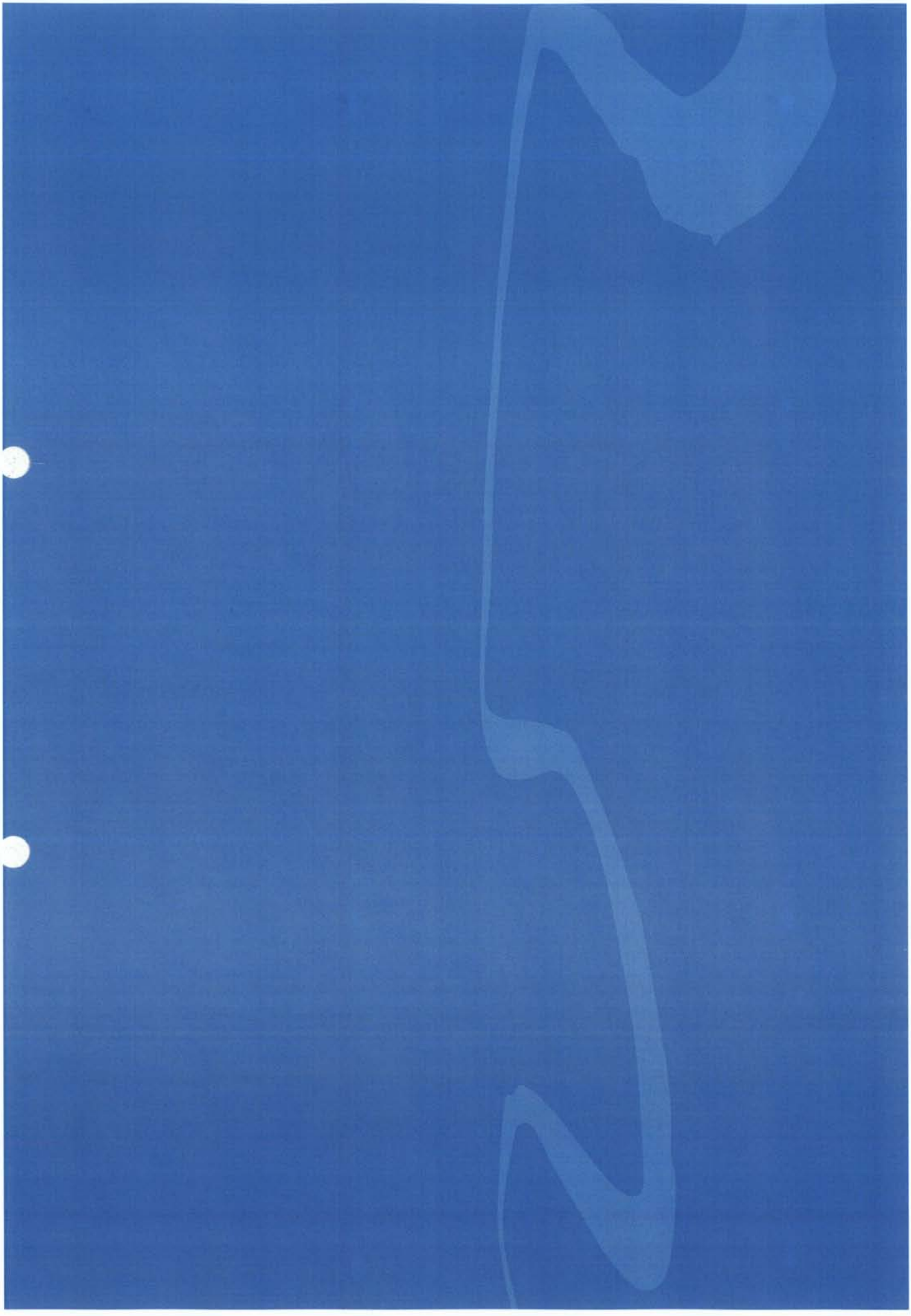

BCC.114.0690

CONTENT

1 Strategic and Design Vision	01
2 Integrated Maritime Engineering	07
3 Functionality and Operations	11
4 Integrated Services Technology	13
5 ESD Initiatives	15
6 Site Specifics	19
7 Technical and Access Compliance	20
8 Construction Sequence	23
9 Cost Plan	25
10 Professional Services Details	29
Appendix 1 - Concept Design Drawings	31
Appendix 2 - Proposed Key Team Members	32

BCC.114.0691



Brisbane in a new era of river transport

BCC.114.0692



1 STRATEGIC AND DESIGN VISION

1.1 THE VISION OF COX RAYNER AND DERLOT

The essence of our team's proposal is to create connection between shoreline and ferry that is embraced by the Brisbane community and by visitors to the city as one of its iconic experiences.

This vision is coupled directly with a strategy which is inherently resilient to future flood impacts, is operationally efficient, safe and accessible to all, and which is economical in terms of established budget and recurrent / lifecycle costing.

Our concept reduces the parts to a small range of elements which minimise maintenance and risk of failure.

The beauty of our concept is its absence of complication combined with its clarity of function and richness of cultural experience. It is a concept for a terminal distilled into essential ingredients, with those ingredients shaped to perform multiple roles physically, operationally and aesthetically to define Brisbane as Australia's subtropical river city.

1.2 BACKGROUND

Having been a victim of the Brisbane flood in January 2011, I have spent much time contemplating the interface between the river and shoreline.

It first occurred to me why private pontoons could simply float over their piers and out into the river torrent, and why they were not tethered in some way that retained them. There were many other observations that I made first hand as my house submerged, such as the varying impacts of debris and the sheer force of the current.

For our approach to the new river terminals, it is our belief that the physical solution needs to be as simple as possible, that is, without complication in its response to future floods or potentially cyclones.

We initially looked at an idea that pontoons could be towed by the Citycats away to safe waters in the period prior to the flood. However, there are a series of compelling reasons not to pursue this strategy, including:

- should flood forecasting be inaccurate, there may be no real necessity to remove the pontoons
- Citycats would need expensive adaptation to be capable of guiding and moving the pontoons
- the Citycats, themselves may be of greater use in certain disaster conditions for other purposes, such as relocating people
- there are issues of maritime safety in endeavouring to move the pontoons and Citycats in periods where the currents have become stronger and unpredictable prior to the flooding.

Taking forward our thought about the private pontoons – that is, how simple it is to simply tether the pontoons – we decided to take a contrasting approach to the Citycat pontoons, with the following objectives being in our view the most important:

FLOOD MODE

- to create a system that secures the pontoons to their location while removing the need for the unsightly array of existing vertical pile types.
- to enable the gangways to swivel around to the direction of the current thereby avoiding the build-up of debris.

TRAVELLER EXPERIENCE

- to create a unified suite of canopied pontoons which generate an easily recognised collective identity as Brisbane's Citycat terminals
- to facilitate an experience which enhances and enriches the Citycat and ferry journey for all types of traveller
- to prioritise personal safety, real and perceived, as fundamentals of river transport day and night
- to integrate the elements – fixed and mobile, signage, lighting and furniture – into a cohesive and holistic form

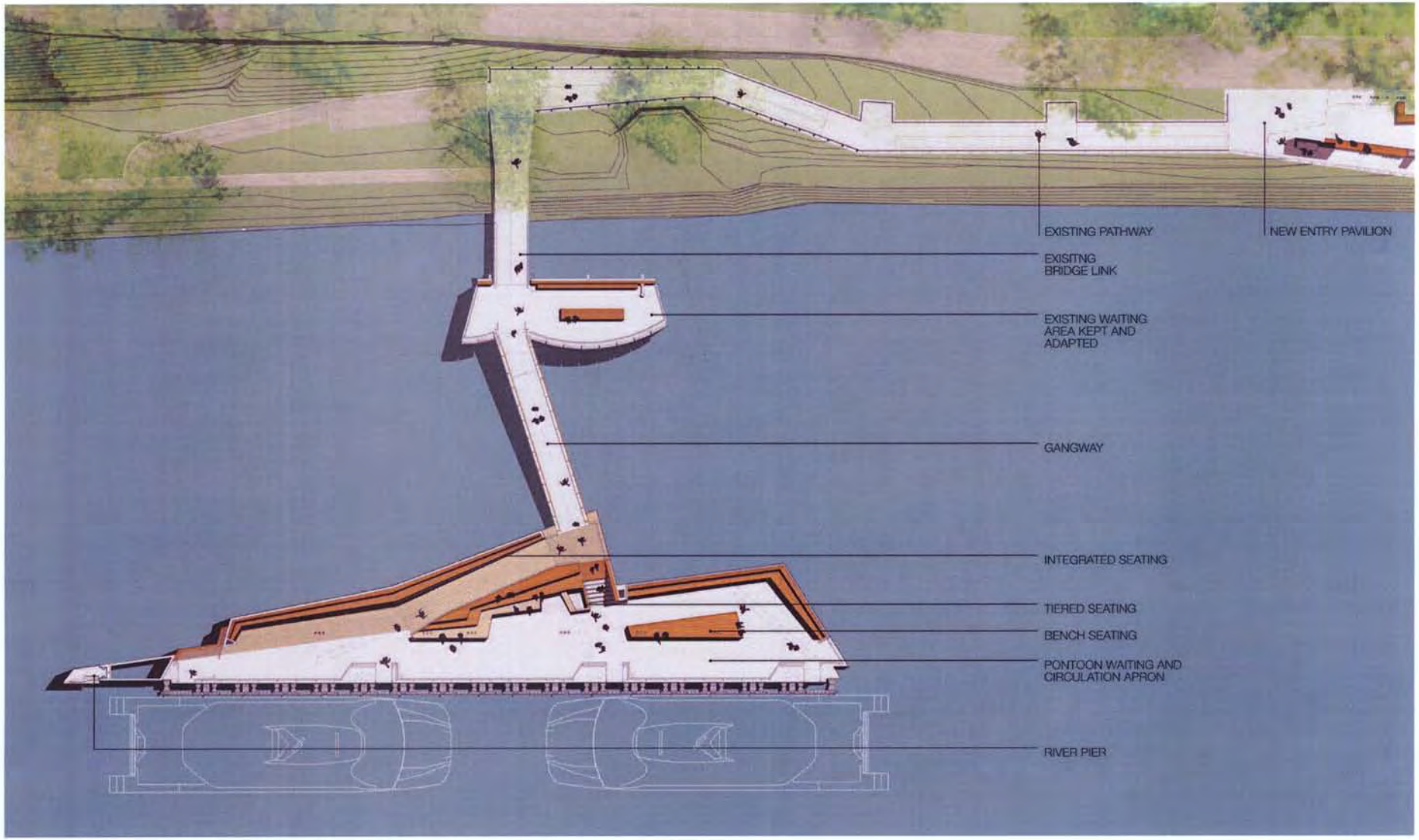

Concept plan at Regatta terminal N 1:300 0 5 10 15

BCC.114.0694

OPERATIONAL EFFICIENCY

- to ensure all berthing and moving operations are uncompromised, whatever the prevailing climatic conditions;
- to ensure full compliance with Brisbane City Council ferry terminal specification;
- to significantly improve the embarkation and disembarkation efficiency of the terminals, facilitating full unloading and loading of two simultaneous Citycats, from both the front and rear gates if required.

1.3 THE CONCEPT

In addressing the aforementioned objectives, our proposal is essentially to create a modular system of new pontoons that can be sized to accommodate any particular berthing demand such as full dual berth, partial dual berth, and single berth.

The system is best described in terms of its operation during flood events and in normal everyday operation.

1.3.1 DURING FLOOD EVENTS

The system consists of a single major pier shaped and located at the upstream end of the pontoon such that it both secures the pontoon and prevents any debris impact damage. The pontoon is further secured by permanent anchor at the opposite end which ratchets to accommodate the changing river level.

The gangway is designed so that it provides lateral stability in non-flood conditions, but detaches away from the existing fixed pier structure and rotates around to be parallel and secured to the pontoon. This technique avoids any build-up of debris, which can now simply flow past the pontoon. The rotation of the gangway is facilitated by permanent floats which are integrated into its' underside.

This system enables the pontoon and gangway to remain in-situ in flood conditions without damage, thereby enabling the terminal to virtually return to normal operation immediately following a flood.

1.3.2 NORMAL EVERYDAY IDENTITY

The concept of a single exposed major vertical pile, rather than of a series of standard cylindrical piles, provides for a highly sculptural solution to the terminals. This sculptural solution creates a dramatic contrast between the horizontality of the pontoon and the verticality of the single pile.

Our concept is to accentuate this contrast by creating a lightweight, 'folded plate' canopy that conveys the spirit of movement through metaphors of marine craft and of a 'bird in flight'.

The vertical pile is sized and shaped to withstand high impacts from Citycats and other vessels. This shape accentuates and acts as a counterpoint to the pontoon's roof canopy, and it carries the signage 'banner' for each site, such as 'Regatta' and 'Holman Street'.

The folded roof canopy geometry is such that it provides a consistent identity to whatever size of pontoon it is applied to. This geometry thereby generates a distinct collective identity for all ferry terminals which we regard as a critical aspect of the city's river transport network, as it has been for the busway stations throughout Brisbane.

1.3.3 NORMAL EVERYDAY LIFE

Our strategy is for the pontoons to act as the main waiting platform for the ferries rather than the existing fixed pier structures, in order to facilitate faster and more efficient boarding (and disembarking).

By elevating the point where the gangway lands on the pontoon, a fixed ramp is provided on the pontoon. This elevating of the gangway is devised to allow the gangway to be relatively perpendicular to the pontoon without pushing the pontoon out beyond its required quay-line. Our concept utilises the raised area to form a series of stepped tiers on which people can sit, away from the major people-movement lines to and from the ferries.

The rear edge of the pontoon is also configured into a long timber slat bench seat which allows people to sit and wait directly opposite the points of embarkation to the ferries.

The roof structure is devised so that it is supported on posts along the rear edge and along the centreline of the pontoon so that the river edge is unencumbered by any visual obstruction and the full panorama is experienced.

It is envisaged that the central apron in front of the tiered viewing seating could be a position for a mobile café of the type located on the Goodwill Bridge. It is recognised that this potential requires business case appraisal and is thus suggested for investigation only.

The pontoon is designed as the climactic part of a journey which also includes the gangway, the existing fixed river pier structure, and varied pathways on land differing at each of the designated location.



Elevation of Regatta scheme from river

BCC.114.0696

The new gangway is designed to be an existing connector between land and water experience, its canopy and triangulated structure integrated into a distinct bridging element. The existing fixed pier structure is simply retained as a waiting area, the only modification proposed being to extend the roof ends for enhanced weather protection in such a way that it forms an integral composition with the new 'folded roof' pontoon canopies.

The pathways on land differ so markedly from each other, for example, North Quay and River Plaza, that no universal solution is applicable. We do, however, believe that each site should be characterised by artwork integrated into the journey – as distinct from a single piece of art – that could be:

- a series of interpretive texts of the particular local aboriginal peoples history of association within the context, such as occurs on the Kurilpa Bridge;
- similarly interpretive texts about the history of waterfront use in each site, an example being the pictorial images along San Francisco's Fishermans Wharf.

These elements are proposed to be integral with lighting and signage, and a signature entry pavilion space that enables people to wait and meet other travellers or for pick up from the ferry terminals.

1.3.4 SUSTAINABILITY AND RESILIENCE

Our concept is for the river ferry terminals to be as self-sustaining as possible. The first aspect of this aim is that the pontoons and gangways do not get damaged in flood events, and are able to return to normal operation with minimal delay time. This resilience is facilitated by:

- one major river pile designed to withstand heavy debris impacts while allowing the pontoon to freely slide up to maximum possible height, and down post-flood;
- gangplank which is permanently elevated 1.8 metres above the pontoon so that, in minor and flash floods, debris passes freely underneath the pontoon;
- gangplank which, during major floods, can be detached from the existing pier structure and rotated around parallel to the pontoon so that debris cannot damage it or build up;
- anchor at the opposite end of the pontoon from the pile end, stabilising the pontoon and securing it during flooding by a ratchet system.

However, there are other proposed elements of a seminal ESD strategy expanded upon in Section 5 but summarized as follows:

Lighting – energy for all lighting on land and floating structures offset by energy fed back into the grid through photovoltaic cells that lay along the folded roof canopies of the pontoons.

Water Collection – the fold in the roof canopy shaped to channel to rainwater collection points for use in wash-down and maintenance activities.

Materials – the use of recycled timbers for seating, rear balustrade and ceiling lining of the rear portion of the pontoons.

1.3.5 CONCEPT CONCLUSION

Our concept is one that is characterised by two functional fundamentals – simplicity and robustness of its operation and of its resilience in response to flood events – and by clarity and richness of identity and experience for ferry patrons.

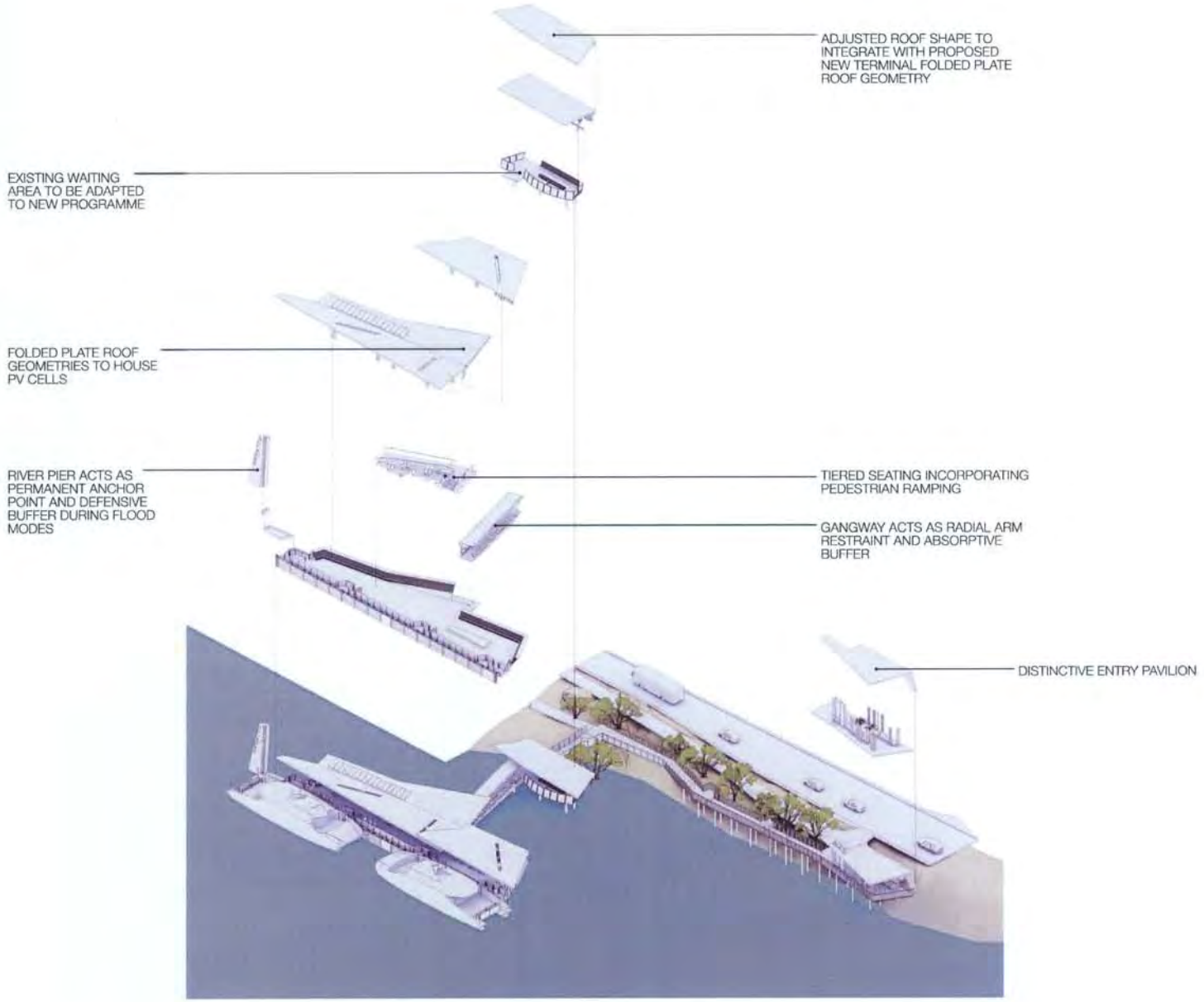

Fundamental scheme components

BCC.114.0698

2 INTEGRATED MARITIME ENGINEERING

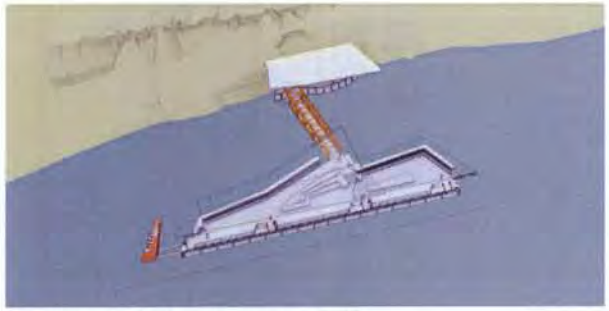

Normal operation (roof dotted to reveal pontoon)

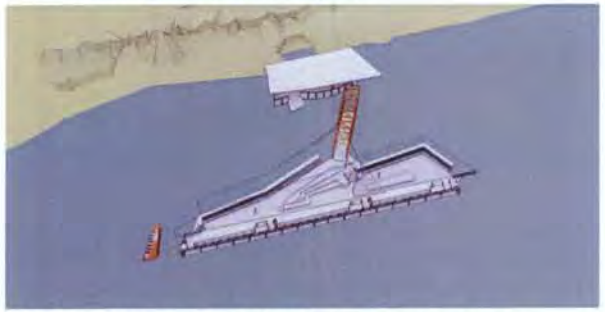

Waters rise to a level sufficient to lift and begin to rotate the gangway

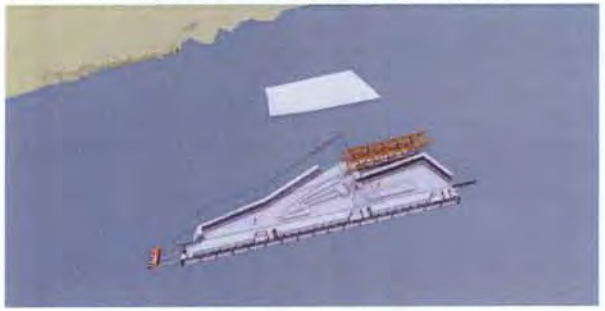

Flood mode with gangway fully rotated by current into stowed locked position

The maritime engineering for the design concept is totally integrated into the overall solution. The project is not seen as an architectural solution with a layer of engineering by necessity. Rather, the two disciplines of design are seen as seamless, each generating solutions for the other.

2.1 ELIMINATING WATER-BORNE RESTRAINT/IMPACT PILES

Many of the existing terminals have water-borne boarding pontoons protected from ferry impact by multiple restraint and dolphin piles. These can appear heavy from the river and land, and are often very high due to the need for them to project above a certain flood height.

It is seen as a major benefit to eliminate these unsightly piles, both from a riverscape perspective and from a user's experience point of view, to open up direct uninterrupted views to the river from the land.

This is achieved via the use of a large and stable pontoon to resist the energy of accidental berthing, combined with the anchor point of the defensive pier, and using the sloping gangway as radial arm with integrated buffering absorption. These techniques allow a superior outcome for the riverscape, from an urban design aspect, and from an everyday-user experience aspect.

2.2 THE GANGWAY AS RADIAL ARM RESTRAINT

The sloping gangway is engineered as a steel or aluminium truss, with a robustness which will enable it to act as the single pivoting radial arm which laterally restrains the pontoon's downstream end, and acts in synergy with the sliding C-clamp on the defensive pier to hold the pontoon in place through the varying heights of the tide. By using the gangway as a radial arm restraint, many piles have been eliminated from the river as per Item 2.1 above.

The existing terminal waiting structures have a significant inherent lateral load capacity, although that capacity is not taken advantage of in the present configuration of the terminals. For those terminals that do have an existing waiting structure, the gangway will be laterally supported by those structures, and some additional strengthening of the existing pile connections is proposed which can be simply installed without interference with the existing structures operation or integrity. A separate gangway abutment structure is provided for those terminals which do not have an existing waiting structure of sufficient capacity.

The gangway system incorporates high capacity / high stiffness shear fenders built into the shore end connection. The high stiffness of these fenders mean minimal movement of them is expected during normal operations, however they activate in the event of a significant accidental berthing event to control loading onto the shore abutment structure.

2.3 A LARGE AND STABLE PONTOON

The pontoon has been specifically shaped to minimise drag loading under river flood conditions. Its tapered upstream end also incorporated an underwater truncation to smooth flow underneath the pontoon to minimise Bernoulli Effect suction of its leading edge during flood stream flow. The long aspect ratio of the pontoons also helps to counter any diving effect of the leading edge caused by this effect.

Virtue has been made of the briefed desire to achieve dual-berthing at many of the ferry sites through the proposed larger pontoons. The large pontoons will accommodate 2 x City Cats simultaneously with both their fore and aft gates being available for embarking and and disembarking. The dimensions required to achieve this generate a pontoon of sufficient size to be very stable in the river, including allowances for ballast and the inherent damping effect of the captured rainwater in the pontoon hull.

This large and very stable pontoon as it is, anchored by the defensive pier and restrained by the radial arm of the gangway, displaces some 240 tonnes and is thereby entirely suitable for the ferry patron waiting area. From a patron viewpoint, this is a major benefit, in that all activity is brought closer to the river, the process of alighting and embarking is accelerated, assisting time-tabling of services.

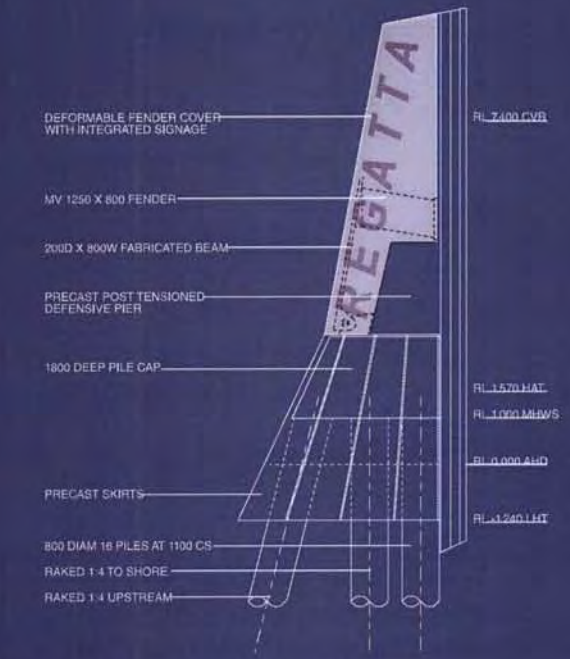

DETAIL - THE RIVER PIER ELEVATION

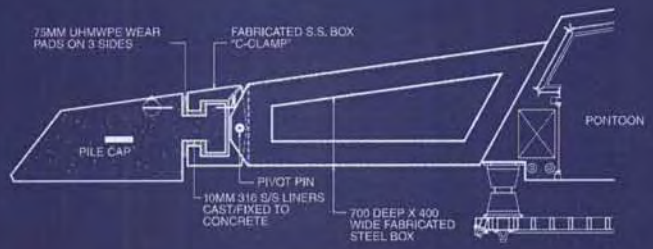

DETAIL - PLAN OF CONNECTION TO PONTOON

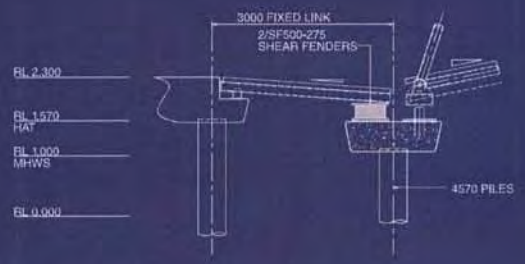

DETAIL - GANGWAY DETACHED FROM PIN



DETAIL - GANGWAY CONNECTION TO EXISTING



DETAIL - GANGWAY TO PONTOON

2.4 THE RIVER PIER

The concept of the defensive pier element in the river is pivotal to the maritime engineering solution. This crucial element acts as a day-to-day anchor point for the terminal, with the C-clamp gliding up and down with the tidal fluctuations. However, in flood mode, it's character as a defensive bulwark becomes critical, hence it is designed to absorb impacts of large flood-borne objects and deflect them before they strike the waiting/boarding pontoon.

The pier restrains the pontoon as it floats up with the flood. As the flood recedes the pontoon is maintained in place, protected by the pier, and prevented from drifting via the flood anchor. Integrated within the pier is a large hidden elastomeric fender, which can absorb the full energy of a 13 tonne pontoon or vessel impacting at the highest estimated flood level and velocity of 6 m/s. In the event of such a strike during an extreme flood event, the structure remains undamaged except for the replaceable cover over the pier's fender assembly. Significant further energy absorption capacity is available in the pier through the potential for elasto-plastic strain of the pier superstructure above the pile cap.

The pier's substantial structural nature has been turned to advantage in that it has been designed as a sculptural totemic item, readily identifiable within the river-scape, accommodating vital items such as identity signage and navigation beacon.

The option exists if early warnings permit to tow away the pontoon and gangway via tug by simply un-shackling them from their engineered attachments.

2.5 ROBUST FLOOD RESILIENCE

The proposal is centred around its robust flood resilient properties. Flood resilience is achieved via 3 x key elements of intelligent maritime engineering:

- The River Pier (described above)
- The Pontoon shape (described above)
- The Buoyant Gangway
- The Flood Anchor

The important role of the defensive pier and pontoon shape is described above.

The concept of the buoyant gangway has been developed in response to the damage witnessed during January 2011 to the existing gangways. The existing gangways, many of which were transverse to the flood current, couldn't withstand the loadings and were torn from their abutments or submerged. With the concept of the buoyant gangway as represented in the design proposal, this substantial and costly piece of infrastructure has a far greater chance of surviving a flood event and being rapidly returned to service.

In this proposal, the gangway is pinned at both the pontoon and the fixed abutment. It has permanently attached and integrated buoyancy panels within the bottom chords and the floor panels enabling it to support its own mass in the water. At the pontoon end, the gangway mounting pin is permanent and has the ability to carry the gangway as it rotates with the flood. At the fixed abutment end, the pin and associated services couplings are engineered to release the gangway as it floats up under the rising flood level. When the gangway has released from its couplings, the flood current acts to rotate it in the downstream direction until it locks in a position parallel to the flow beside the pontoon. In its parallel position and still pinned in place in the lee of the large pontoon, the gangway can now float up with the pontoon as it rises on the flood waters, its chances of being struck and destroyed greatly reduced if not entirely eliminated. After passing of a major flood, the gangway's shore end is lifted by crane back onto the shore abutment.

The gangway only releases and pivots on a significant flood event, and the event in which it does release is engineered through the level of the shore end abutment and the volume and distribution of buoyancy tanks in the gangway.

The flood anchor is a concrete block anchor sitting on the river bed beneath the downstream end of the pontoon, on a loose chain tether. The tether length allows for rising of the pontoon on flood water levels, but provides sufficient restraint of the pontoon's downstream end from drifting laterally in re-emergent in-coming tide flow after the flood and prior to re-coupling of the gangway radial arm.

2.6 ACCIDENTAL BERTHING

The terminal is designed to withstand significant abnormal berthing energy without permanent deformation.

Under normal situations, a series of low stiffness arch fenders absorbs the small, approximately 3 kJ, energy with minimal reaction and therefore minimal movement or acceleration of the pontoon.

The accidental berthing event is specified as a CityCat vessel striking the structure at 45° at a velocity of 3.0 m/s. The component of this energy transverse to the pontoon is approximately 114 kJ and is absorbed by the pontoon's main fender system, which consists of doubled 300mm cone fenders behind a semi-articulated wale beam. Further energy absorption is provided through elastic strain deflection of the pier structure's piles, and by two shear fenders built into the gangway arm support structure.

The lateral load and energy absorption capacity of the pier is driven by its foundation capacities. To cater for the broad range of geotechnical conditions expected at the various terminal sites, the vertical pile supporting the downstream end of the pier can be rock anchored or socketed if required.

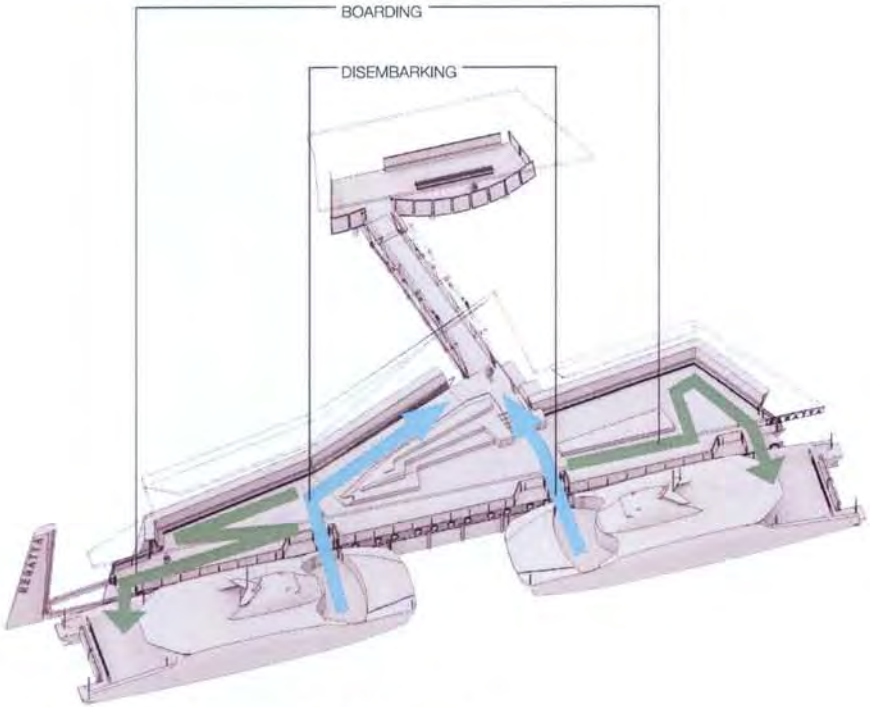

Flow of patrons streamlined by availability for 4N° boarding gates

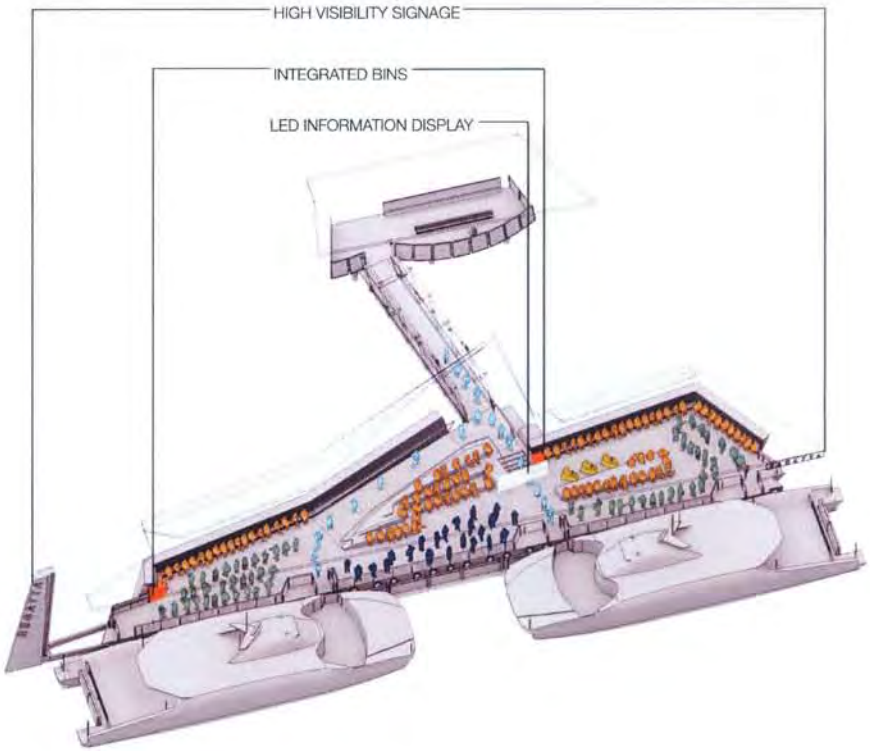

Ample space available for seated and standing patrons

3 FUNCTIONALITY AND OPERATIONS

3.1 BENEFITS OF DUAL BERTHING

The demand for Citycat operations on the Brisbane River has grown steadily over a number of years, requiring more Cats and more stops servicing more suburbs. One of the issues with maintaining an intensive regular time-table is the length of time taken in berthing, alighting patrons and allowing others to board. For stops that only have the capacity to berth a single Cat at any one time, inevitably at some point, delays are encountered whilst a Cat moving in the opposite direction waits offshore for the opportunity to berth.

In order to best facilitate a "future-proofed" Citycat system that will serve Brisbane well for the next 40 to 50 years, it is proposed that all stops are configured to allow dual berthing in the manner of the current Riverside Centre stop at Eagle Street using a single large pontoon. This model is definitely a superior outcome as it allows dual berthing with both fore and aft gates of each Cat to be active, thereby allowing simultaneous alighting and embarking from opposite ends if necessary. It provides ultimate flexibility, efficiency and speed as an operational model and will ensure smooth time-tabling possibilities.

The only exceptions to this proposal are Holman Street and River Plaza which are proposed as smaller models suited to their reduced patronage. Refer to Section 6 for additional detail on these stops.

3.2 STREAMLINED PATRON FLOW

As outlined above, one of the greatest advantages of adopting a large dual-berthing pontoon is ultimate flexibility and speedy dissipation of commuter patron flows especially at peak hours. In making available the potential for both the front and rear gates simultaneously the ferry operators have choices to assist their peak load flows, thereby streamlining operations.

An additional important benefit of the large 4-gate pontoon is its' inherent stability, especially when ballasted in an effective manner. This large stable quality means these pontoons are ideally suited to becoming the primary waiting area for patrons, enhancing the experience of travelling by water by making that experience more immediate. The fact that patrons wait on the pontoon means that queuing sequence is also more immediate, reducing timeframes for alighting passengers. Each of the large pontoons is sufficient in size to allow queues to move past each other unimpeded.

Maritime engineering calculations indicate that these large pontoons are stable and safe as waiting areas, refer to Section 7.

3.3 HIGH OPERATIONAL VISIBILITY

Structural supports to the pontoon roof are kept at a minimum and away from the seaward edge to ensure a high degree of visibility, both from patrons out to the approaching vessels, and from vessel masters to patrons waiting or standing on the pontoon.

The rear face of the pontoon is as open as is practically possible, allowing good CEPTED surveillance from shorelines.

3.4 SHELTER AND WAITING AMENITY

The concept of waiting on the pontoon means that the quality of the pontoon environment is paremount and has been designed to be safe and have a high degree of patron amenity. All trafficable surfaces and seating areas of the pontoon are roofed providing rain and sun protection.

Seating is provided in a number of 'modes' to provide choices for patrons, including benches with integrated backs, single benches without backs, and in a tiered mini-amphitheatre pocket. These are deliberately crafted using dressed recycled Australian hardwood to provide a degree of warmth to the users' experience and a maritime flavour to the space.

The space will be designed to be lit safely in a low-glare manner utilising a mixture of direct and indirect light sources from dusk to the conclusion of the last evening service.

3.5 INTEGRATED INFORMATION SIGNAGE

Special care has been taken to integrate a proposal for state-of-the-art electronic real time information signage. This panel is tucked high against the roof plane immediately upon entry and is situated in the column line.

3.6 HIGH DURABILITY MATERIALS

Attention has been paid to the desire for a long service life of all components associated with the ferry service, with the aspiration being 50 years. The pontoon roof envelopes are proposed as standing seam zinc, the pontoon structure and roof superstructure as high performance protective-coated steel, balustrades as glass and stainless mesh, flooring as non-slip rubberized sheet, rainwater goods as stainless steel, any timber as Australian Class 2 hardwood. Aluminium will be employed where necessary and appropriate for its' non-corroding properties.

3.7 ROLE OF THE EXISTING TERMINAL WAITING STRUCTURES

The existing terminal waiting areas are relatively new and represent a significant capital investment and embodied energy. Our proposal maintains them and integrates them as a springing point to the new large pontoon and leaves open the possibility for their role to be developed over time as a site specific response to the particular locale with which they are associated. The details of functional programmes for these spaces could be many and varied but may include integrated or automated ticketing facility, news-stand or coffee vending outlets. Reference is made to the small facility situated mid-span of the Goodwill Bridge as an example of how such spaces can be occupied successfully.

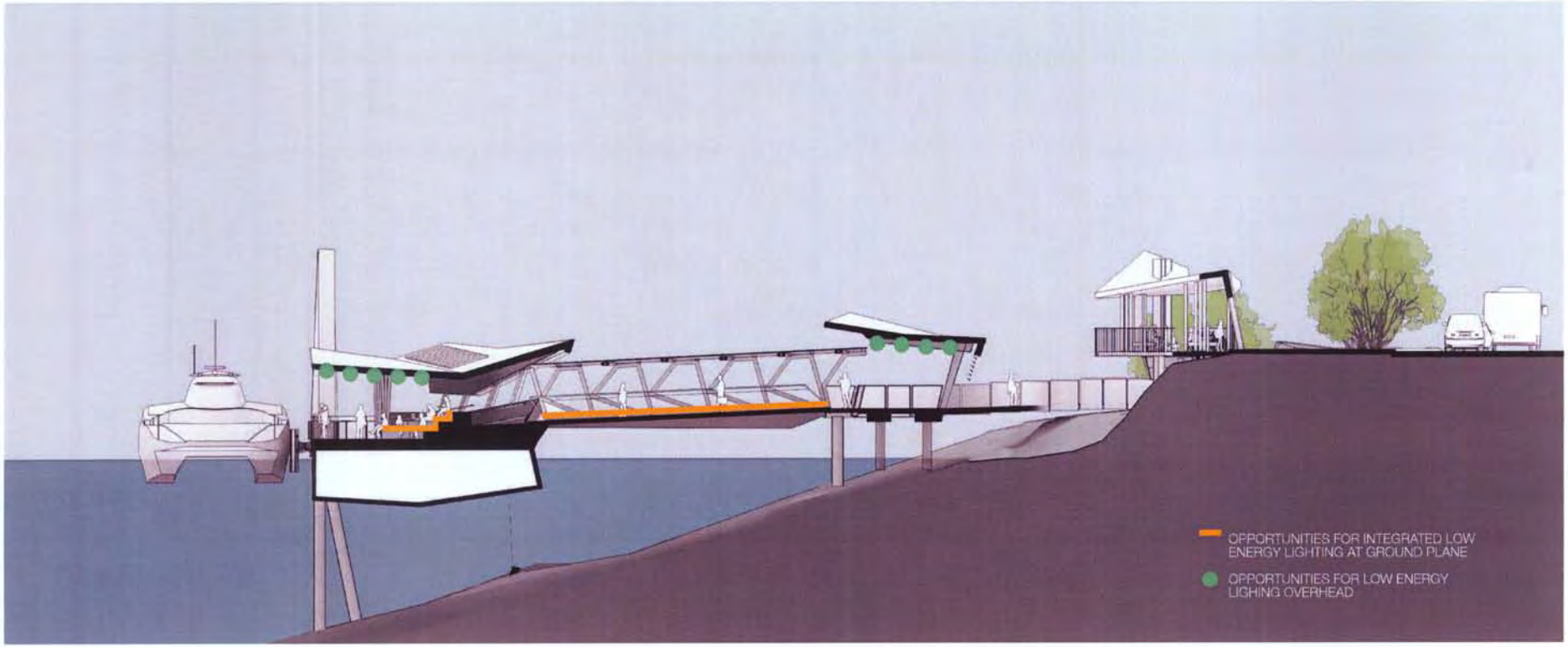

Section from river to shore

BCC.114.0704

4 INTEGRATED SERVICES TECHNOLOGY

The approach to the incorporation of required services is consistent, such that all services are integrated as seamlessly as possible.

4.1 LOW ENERGY LIGHTING

Long service life and low energy consumption can be obtained through the use of modern LED technology. It is the intention that this technology be adapted and integrated into the structure and surface planes of the terminals and their consumption of energy offset through the roof-mounted PV cells.

4.2 WI-FI COMPATIBILITY

All terminals will become wi-fi hot-spots, encouraging use by patrons commuting to and from their workplaces as well as students. This simple inclusion should foster continued patronage and go a long way to future-proofing the modern terminals for a fully networked Brisbane community.

4.3 POTABLE WATER

Any integrated drinking fountains will be connected to town-water supply.

4.4 GENERAL PURPOSE ELECTRICAL SUPPLY

Exterior weather-rated GPO's will be integrated into relevant points on the pontoons and gangways to ensure maintenance and cleaning devices, tools and other accessories required from time to time can be utilized with ease.

4.5 CCTV AND DURESS POINTS

Many terminals are isolated entities especially late at night so there is the suggestion that CCTV and duress points could be integrated to improve patron safety and the perception of the terminals as useable and safe at all hours.

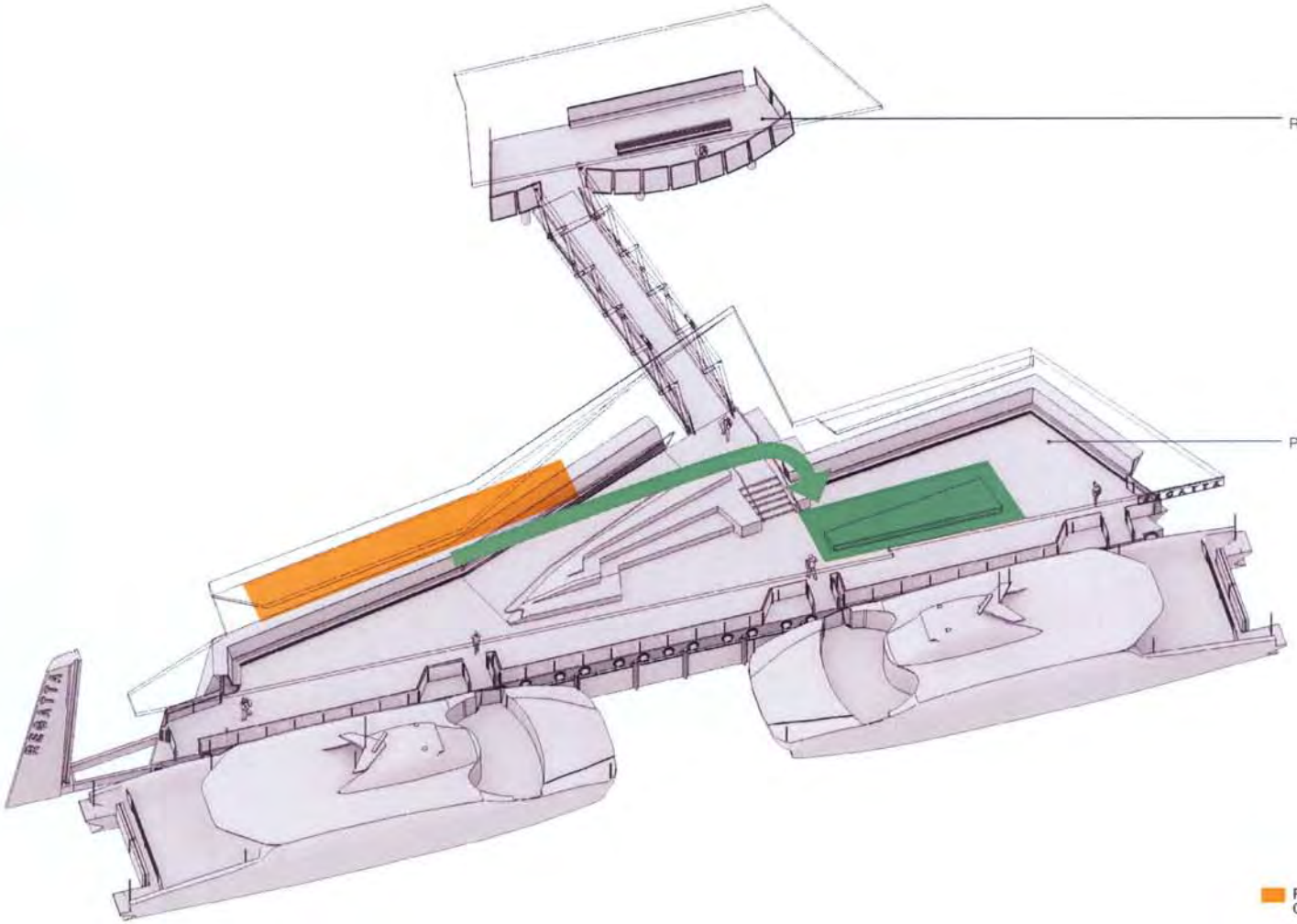

Sustainability initiatives

5 ENVIRONMENTAL SUSTAINABILITY INITIATIVES

The proposed terminals are designed to be environmentally responsible and be an exemplar of a practical approach to ESD initiatives.

5.1 EMBODIED ENERGY OF MATERIALS AND DESIGN EFFICIENCY

The most responsible approach to designing for the environment is to produce an efficient design using minimal materials fit for purpose but with the minimum amounts of embodied energy. For example, when a design proposal can be reduced by 0.5 tonnes of steel, this would have the same impact in Green House Gas reductions as taking an average family sedan off the road for a full year. The production of one tonne of steel produces the same amount of GHG as driving an average family sedan almost 60,000km. One tonne of aluminium produced equates to that sedan driving almost 300,000km. That's 7.5 laps of the globe! Clearly economical and efficient design is critical from the outset.

For this reason the design will be centred on the following principles:

- Minimising embodied energy
- Minimise material use: An efficient design will have lower embodied energy than an inefficient design of the same materials. Efficiency in size and design.
- Select materials that have lower embodied energy
- Prestressed concrete typically contains less concrete and less high-embodied-energy steel than reinforced concrete.
- Durable timber purlins in a marine or other corrosive environment are a lower-energy option than aluminium.
- When compared on a strength basis for the same application, a timber element would generally be responsible for in the order of 4 times less GHG production than would a steel element, and in the order of 14 times less than an aluminium element.
- The design therefore proposes to use as much recycled Australian hardwood and Marine timbers as practical.
- Minimise waste - wastage consumes energy as well a materials.
- Precast elements are often more efficient than in-situ, due to multiple use of forms and exact batching of concrete. A standard set of forms can be used for the pile caps and towers for the entire suite of terminals.
- Select durable materials that will not require wasteful maintenance or premature replacement
- Galvanising for certain applications may be a better choice than painting (but not where immersed in salt water)
- A higher grade of concrete may prevent premature reinforcement corrosion.
- Select recyclable materials and ensure that all are recycled.
- The production of recycled aluminium uses in the order of 90% less energy than aluminium produced from virgin materials.
- The existing aluminium gangways should be recycled for use in the overnight moorings where possible.
- Select locally-derived materials, to minimise transport and handling energy. Local pre-manufacture and low transport costs by sailing the pontoons down river into position.
- Pontoon ballast can be a high-flyash content concrete, thereby reducing the embodies energy of this significant component.



348

Use of recycled Australian hardwood and marine timbers



5.2 ROOF-MOUNTED PV CELLS

Brisbane enjoys predominantly clear skies for much of the year and is therefore well suited to adopt Photo-Voltaic solar technology. The design proposal has the added benefit of a large roof area to accommodate such a desire.

Early calculations indicate that with roof-mounted PV cells on the terminals, the following outcomes are possible:

Mounting PV Cells can be at due North plus +/- 30degrees, and tilted at least 5 degrees (for self cleaning). This configuration will provide an annual energy generation of about 90% of ideal optimal, in BNE about 1,450kWh per annum of energy for every 1kW installed.

Initial estimates indicate that the large terminal structures would need approx. 1.5kW worth of lighting to meet code. This would use about 6,600kWh of energy per annum. To fully offset this energy with PV (so that the terminal was carbon neutral), approximately 4.5kW of PV system would need to be installed. Assuming a polycrystalline system, this 4.5kW would require about 32m2 of roof area at approx. 5 degrees tilt and toward North (+/- 30degs). A small enclosure (approx 900x900x450mm) would be needed to house the associated inverter.

Using this approach the energy generated by the PV can be fed back into the citywide grid and be a 100% offset against the energy consumed for lighting the terminals day to day.

5.3 RAINWATER HARVEST FOR WASH-DOWN AND MAINTENANCE

Each terminal will generate rainwater from their substantial roof planes. It is proposed that each terminal houses a 5000L tank in the hull of the pontoon. This water can be accessed and made available for wash-down and maintenance of the vessels or the terminal itself through the simple use of a small electric pump housed below deck out of direct weather.

5.4 BENEFITS OF PREFABRICATION

The design proposal lends itself directly to a high degree of prefabrication. The three largest elements of the design (the Pontoon, the Gangway, and the River Pier) can be almost entirely prefabricated and brought to site via the river itself. This significantly reduces on site construction time and the environmental risks associated with same. Prefabrication itself has been shown to be a highly efficient construction technique when it comes to energy usage and material wastage.

5.5 RECYCLED AUSTRALIAN HARDWOOD

The inclusion of timber in the design proposal is a deliberate strategy to add warmth and a distinct maritime flavour to the patron's experience. There is an added benefit of this material having a low embodied energy. This timber will be sourced as recycled Australian hardwood or marine hardwood with excellent durability and a readily identifiable patina.

5.6 RE-USE OF EXISTING GANGWAYS

The existing aluminium gangways at the ferry terminal sites represent a significant capital investment and embodied energy. It is therefore proposed that these elements are recycled for re-use in the overnight moorings at Dutton Park and St Lucia, representing a significant capital and energy savings.

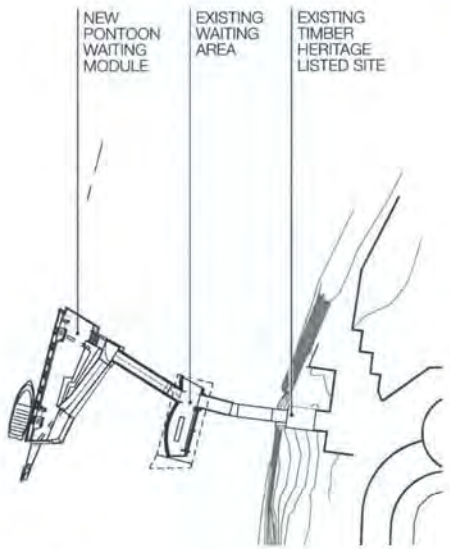

Holman Street

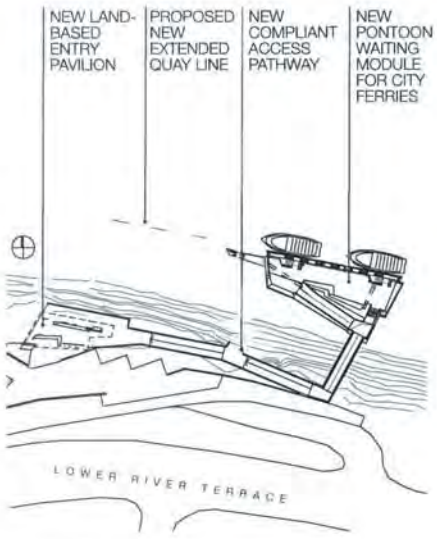

River Plaza

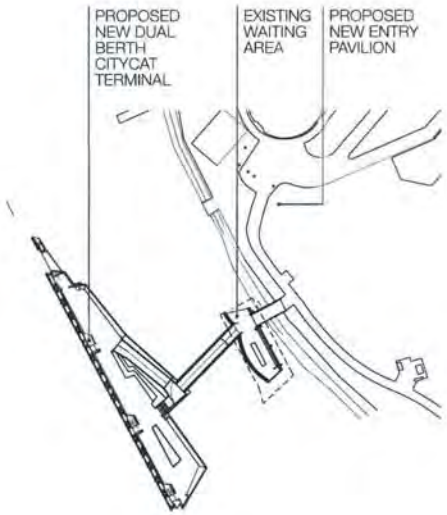

Sydney Street

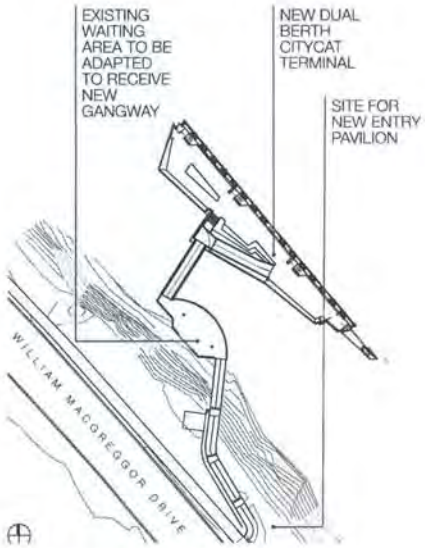

Saint Lucia University of Queensland

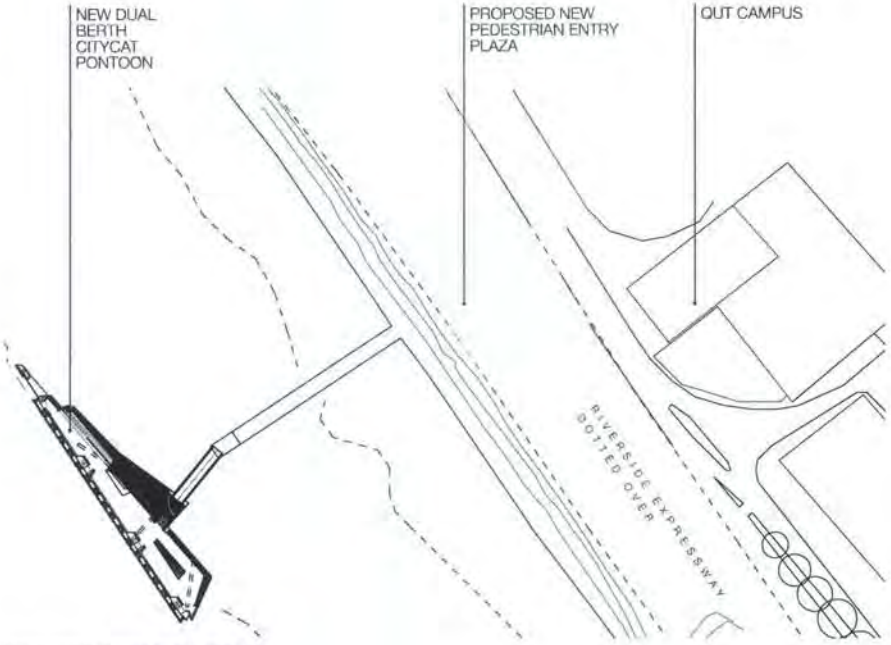

Queensland University of Technology

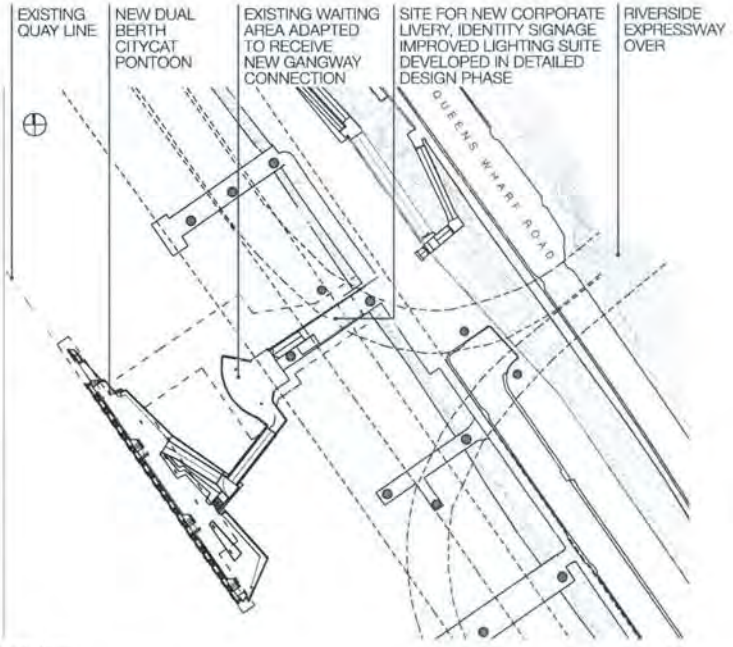

North Quay

6 SITE SPECIFICS



Concept for a recognisable land-based entry pavilion as seen on approach

6.1 MODULAR PONTOON APPLICATIONS

Each of the seven sites vary markedly in their land-based interface and have different city ferry and city cat demands for vessel usage. The modular design proposal put forward suggests that the following solutions be adopted for the seven particular sites:

A: Full Size Dual Berth/ Four Gate Pontoons receiving CityCats to be applied to –

- University of QLD St Lucia
- Regatta Toowong
- North Quay
- Queensland University of Technology
- Sydney Street

B Reduced Size Pontoon Modules receiving City Ferries to be applied to –

- River Plaza
- Holman Street

The modular nature of the design solutions means that in application A, there is the possibility of an alternate module being developed which still allows dual berthing but has a screw-pile downstream. Similarly in application B, there is the opportunity to expand the pontoon module by a plug-on section allowing an expansion in operational capacity of differing vessel types and berthing sequences.

6.2 LAND BASED ENHANCEMENTS

Whilst each site varies in its land-based interface, allowance has been made to develop a unified integrated approach to a series of enhancements for each of the sites including improved lighting, corporate livery and signage, bicycle parking, landscaping and access, all to be resolved in detailed design phase.

Importantly, the following terminals will be further enhanced through the introduction of a recognizable signature entry canopy structure containing local cultural and interpretative signage, way-finding, small seating area and other site-specific inclusions:

- University of QLD St Lucia
- Regatta
- Queensland University of Technology
- River Plaza
- Sydney Street

7 TECHNICAL AND ACCESS COMPLIANCE

7.1 TECHNICAL COMPLIANCE

Close consideration has been made to Council's June 2011 Ferry Terminal Design Specification (FTDS) in development of the concept. Commentary on how the concept addresses particular technical aspects of these criteria is provided in the table below:

Item	Solution and commentary
Section 1.1 – The pontoon shall be designed to minimise eddying, drag forces and "negative lift"	As discussed in Section 2, the pontoon has a specifically streamlined shape, to have a low drag coefficient and minimise flood flow suction on the underside of the pontoon's upstream edge. It is estimated that flood drag force on the pontoon and retracted gangway in the maximum flood velocity of 6 m/s will be in the order of 100 kN.
Section 1.1 – The pontoon and pile arrangement must allow for overnight mooring of CityCat and/or City Ferry vessels	Overnight mooring at least two vessels is possible at the front of each terminal. The larger terminal pontoons do not have mooring / turning piles, such that all mooring lines can be directly run to the pontoon which floats on the tide with the vessels. For the smaller terminal pontoons, low height mooring / breasting / turning piles are provided with mooring ring assemblies to provide restraint of the vessels overnight through the tidal range. Where required, the ability exists to moor a third vessel behind the upstream end of the larger terminal pontoons, with addition of a gate and small fenders. A fourth vessel could be added on the downstream end with the addition of a gate, fender and a mooring / breasting pile. Similar solutions exist for the smaller terminal pontoons.
Section 1.1 – All structures must be designed to be flood resilient.	Flood resilience is fundamental to the concept, as discussed in Section 2. The terminals are designed for flood drag of approximately 100 kN on pontoon and gangway during a 6 m/s maximum flood velocity, plus absorption of the full energy from coincident impact of a 13 tonne pontoon or vessel at maximum flood height, while in the fully elastic range. Significant further energy absorption is available in the elasto-plastic range, and the design is readily adaptable to provide significantly greater flood debris impact resistance through installation of a larger fender in the defensive pier and a potentially larger rock anchor in the pier's upstream pile.
Section 1.1 – The design of all infrastructure must be appropriate for all tidal levels between HAT and LAT and the 1 in 100 year (Q100) flood levels, current velocity and debris loads on all structures.	The slender, single structure of the defensive pier and the tapered loading edge of the pontoon results in significantly less available area for debris build up and associated loading than a terminal that, for example, consists of multiple piles protrude up to and above flood levels. This feature also serves to minimise afflux.
Section 1.2 – The structures must be designed to accommodate the worst case mooring loads of 2 CityCats under full flood conditions, unless approved by Council.	Flood drag from a 6 m/s flow velocity on a CityCat moored parallel to the flood flow is envisaged to be in the order of 20 kN. Such loading is small compared to drag on the pontoon and more importantly flood impact loading, so loading from two moored CityCats can be easily withstood by the larger terminal pontoons. The smaller terminals can moor a single CityCat through a full flood event because the mooring piles would be submerged by that time.
Section 1.3 – Berthing load	Resistance to the specified normal and accidental berthing loads is discussed in Section 2. The terminal infrastructure is designed to remain in the fully elastic range in resistance of these energies, and significant energy absorption capacity would exist in the elasto-plastic range of the structures and the impacting vessel's hull.
Section 1.4 – Environmental loads	Wind waves and Wind: Review of available fetches and water depths approaching the various terminal sites has yielded maximum wave heights in the order of 1 m transverse to, and 2 m longitudinal to the pontoon. The resulting transient forces from such waves, in combination with static response to 500 year ARI 3 second gust wind forces are less than the ultimate capacity of the pontoon's support structures.
	Waves from vessels: 0.6 m waves with 6 s period are calculated to provide a lesser reaction on the pontoon than that of the fenders in an abnormal berthing event.
	Current loads: Discussed in Section 2 and above.
	Tidal levels: Tidal planes as published for the Brisbane Port Office have been adopted for all terminals.

Item	Solution and commentary
Section 1.5 – Serviceability criteria: The pontoon shall be designed to have a maximum lateral acceleration at the commuter centre of gravity of Ah < 2.5 m/s²	The rigidity of the pontoon's lateral support from the pier and radial arm gangway is higher than that of a conventionally supported pontoon on vertical cantilevered guide piles. The combination of this rigidity of support, and the impedance provided by the pontoon's mass mean that the pontoon's acceleration during a specified abnormal berthing event would be in the order of 1 m/s².
	This is significantly less than the specified maximum lateral acceleration of 2.5 m/s² and is also significantly less than that which would be experienced on board the vessel itself. The pontoon and its supports are also designed to remain completely within the elastic state during such an event, such that the pontoon would be a safe and comfortable place to remain at all operational times. Utilisation of a large, rigidly supported pontoon as a waiting area for high speed ferry services has precedent elsewhere, notably in the Thames Clipper system in London.
Section 1.5 – The pontoon system should be designed so that the pontoon remains on the piles up to the worst case load combination of water heights	Refer Section 2 for detailed description of flood restraint of the pontoon. The pier height protrudes above the maximum flood level and therefore restrains the pontoons through the worst case water heights.
Section 1.5 – Articulated gangway levels and angles shall comply with DDA, DSAPT and AS1428.1 for 80% of the time between HAT and LAT. A statistical analysis of the tidal range may be required to ascertain this.	A statistical analysis of tide level probability of exceedance for the Brisbane Port Office tidal planes has been prepared, as presented below. The access angles and levels comply with the specified standards for at least 80% of the time, typically for still water levels between HAT and RL +0.6 AHD.
Section 1.6 – Maintenance of the wearing components of the piles is not to interrupt ferry operations and to be designed to minimise maintenance	The only notable wearing components of the system are the polyethylene pads that guide the C-frame in the pier's guide channels. These pads are intended to have a generous wear allowance and to be fixed in slide-in guides to enable rapid change-out. Access to the pads is via small boat between scheduled CityCat movements.
Section 1.7 – Provide for easy removal of the pontoon and gangway for maintenance and / or flood events	The gangway can be simply lifted off its two pin supports by a crane. The pontoon can either remain in place during such time, restrained by the pier and by the flood anchor. Removal of the pontoon is achieved by simply attaching a buoy to the flood anchor chain, uncoupling the anchor and uncoupling the bolted connection on the C-frame restraining the pontoon to the pier.
	Attachment points for a temporary adjustable tether system is built into the pier and the pontoon, such that the load can be relieved from the C-frame for removal, and to assist in guiding the pontoon back into position on replacement.
Section 1.7 – Design moveable elements of the pontoon, gangway and walkway to minimise nuisance noise to surrounding properties	The only moving interface is the pontoon's C-frame in the pier's guide channels. It is lined with low friction ultra-high molecular weight polyethylene, sliding on stainless steel liners. Because the gangway forms a radial arm lateral support of the pontoon, it incorporates no significantly moving interfaces and therefore the number of sliding / rolling / moving interfaces that could generate nuisance noise and wear are minimised when compared to a conventional cantilever pile arrangement.

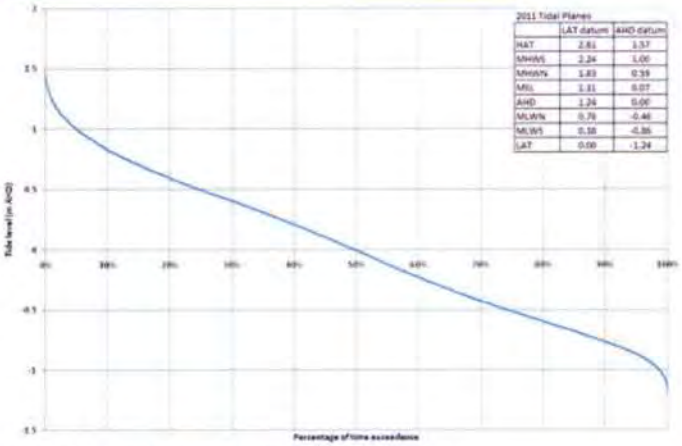

Image 1.5: Tide level exceedance analysis for Brisbane Port Office

BCC.114.0714

8 CONSTRUCTION SEQUENCE

8.1 PREFABRICATION

Virtually all components of the new terminals are prefabricated and fitted out remote from the site, including:

- The piles are pre-fabricated and spliced to length, delivered to site on a barge.
- The pile caps are cast as precast troughs off site, which when installed on the driven piles also double as formwork for the cast in-situ concrete that connects the piles to the pile caps. This maximises off site work, minimising both waste of in-situ formwork and higher risk activity over water.
- Superstructure components to the pier including the precast post-tensioned tower structure and impact fender assembly are similarly fabricated and cast off site, and simply bolted / post tensioned onto the pile cap.
- The pontoon, inclusive of roof, fendering, fitout and services can be entirely assembled and finished remote from the sites, ideally at a river-side fabrication facility or ship-builder and floated up river complete to the site when ready for installation.
- The gangway is also fully fabricated and fitted out off site, delivered by barge to site ready for installation.

Design for maximised off-site pre-assembly minimises interference with operation of the existing terminals, maximises safety by transferring labour to a more controlled environment and minimises costs through more efficient work, less waste.

8.2 PRE-INSTALLATION

The form of the new terminals has been laid out to minimise disruption to the existing temporary facilities during replacement.

The in-situ piled structures of the new terminals include the pier structure and gangway abutment.

The piers can be constructed upstream of the existing temporary terminals' pontoons from behind the quay line and therefore result in minimal to no disruption to the existing operation throughout their construction.

Similarly, the new gangway abutments can be piled and constructed immediately downstream of the existing gangways without affecting the temporary terminals' operation.

Construction of other fixed infrastructure such as that based onshore, strengthening of the existing waiting structure pile connections, etc, can also be completed prior to shutdown of the existing interim terminals.

In the case of the existing North Quay terminal, the upstream terminal may need to be shut down early in order to facilitate construction of the pier in the space of its upstream turning / breasting / mooring pile.

8.3 CONVERSION

After pre-installation of all fixed infrastructure during continued operation of the existing interim terminals, the existing gangways will be lifted out and stored for reuse elsewhere such as in the new Dutton Park and St Lucia overnight moorings, the existing pontoons will be uncoupled and removed, and the existing piles extracted. It is expected that the existing pontoons would be reused elsewhere or sold, and the existing extracted piles either reused or sold for recycling.

Following removal of the existing terminal structure, the new pontoon is floated into place, temporarily tethered to the pier structure and guided into place to lock the C-frame to the guide channels. The flood anchor is also installed at the downstream end to control position of the new pontoon in the absence of the new gangway. The new gangway is then dropped into place on their pins on the pontoon and abutment structures, with services connections made at either end to connect the pontoon to the shore. Where existing waiting structures exist, the fixed link between the existing structure and the gangway abutment is also simultaneously installed.

The conversion programme for a typical terminal is estimated to be approximately one week, as follows:

- Uncoupling of services, removal of existing gangway and pontoon: 1 day
- Disassembly of pile head frame and extraction of existing piles: 3 days
- Installation of new pontoon and flood anchor: 1 day
- Installation of new gangway and connection of services: 1 day

BCC.114.0716

9 COST PLAN

9.1 OVERVIEW

The proposed scheme for five CityCat terminals, two city ferry terminals and two overnight moorings sits comfortably within the allocated budget as illustrated by the cost plan summary and details which follow prepared by Rider Levett Bucknall. Every effort has been made to allow for appropriate project contingencies because of the early stages of the design work and to cover building within the Brisbane River which is often accompanied by unknown latent conditions. The cost plan for any project is an evolving document and what is presented in this report can form the basis of further detail as the design proposal is developed and expanded toward resolution.

9.2 COST SUMMARY

RLB | Rider Levett Bucknall

Brisbane River Ferry Terminal Design Competition
Preliminary Estimate
Deliverable Requirements Summary

Rates Current At July 2011

			Total Cost	City Cat Terminals	Ferry Terminals	Night Moorings
LB	**Land Based Infrastructure**	**4.4%**	**$ 2,650,000**	$ 1,900,000	$ 500,000	$ 250,000
AP	**Access Pathway Infrastructure**	**3.7%**	**$ 2,233,500**	$ 1,590,000	$ 595,500	$ 48,000
PO	**Pontoon**	**21.7%**	**$ 13,037,000**	$ 9,970,000	$ 2,712,800	$ 354,200
PI	**Piles**	**12.5%**	**$ 7,487,480**	$ 4,132,000	$ 1,702,594	$ 1,652,886
RS	**Roof Structure**	**3.6%**	**$ 2,143,700**	$ 1,743,500	$ 400,200	$ -
SE	**Services**	**2.3%**	**$ 1,383,900**	$ 1,001,000	$ 320,400	$ 62,500
AA	**Additional Amenity**	**1.6%**	**$ 950,000**	$ 750,000	$ 200,000	$ -
	Estimated Net Cost		**$ 29,885,580**	$ 21,086,500	$ 6,431,494	$ 2,367,586
	Margins & Adjustments					
	Preliminaries	26.0%	$ 7,770,420	$ 5,482,600	$ 1,672,206	$ 615,614
	Builder's Work	2.5%	$ 942,000	$ 664,000	$ 203,000	$ 75,000
	Margin	10.0%	$ 3,860,000	$ 2,723,000	$ 831,000	$ 306,000
	Design Development Contingency		$ 5,000,000	$ 3,528,000	$ 1,076,000	$ 396,000
	Design Fees	12.0%	$ 5,695,000	$ 4,018,000	$ 1,226,000	$ 451,000
	Sub-total		**$ 53,153,000**	$ 37,502,100	$ 11,439,700	$ 4,211,200
	BCC Project Management Fees		$ 600,000	$ 423,000	$ 129,000	$ 48,000
	BCC Construction Management Fees		$ 600,000	$ 423,000	$ 129,000	$ 48,000
	Escalation		Excl.	$ -	$ -	$ -
	Project Contingency		$ 5,250,000	$ 3,704,000	$ 1,130,000	$ 416,000
	Competition Fees		$ 120,000	$ 84,000	$ 26,000	$ 10,000
	Winners Purse		$ 70,000	$ 49,000	$ 15,000	$ 6,000
	Design Advisor Fee		$ 200,000	$ 141,000	$ 43,000	$ 16,000
	Grand Total		**$ 59,993,000**	$ 42,326,100	$ 12,911,700	$ 4,755,200

9.3 DETAIL COST BREAK DOWN

Deliverable Requirements / Item — Rates Current At July 2011

		Unit	Qty	Rate	Total Cost
LB	**Land Based Infrastructure**				
66	Land based site works, landscaping and improvements - city cat terminals	No	1	$ 500,000	$ 500,000
17	Land based site works, landscaping and improvements - city cat terminals	No	4	$ 350,000	$ 1,400,000
65	Land based site works, landscaping and improvements - ferry terminals	No	2	$ 250,000	$ 500,000
57	Land based site works, landscaping and improvements - night moorings	No	2	$ 100,000	$ 200,000
67	Rock revetment/protection to night mooring bank	No	2	$ 25,000	$ 50,000
	Land Based Infrastructure Total				**$ 2,650,000**
AP	**Access Pathway Infrastructure**				
81	Strengthening works to existing structures	No	5	$ 75,000	$ 375,000
51	Upgrade/refurbishment of existing waiting areas	No	5	$ 50,000	$ 250,000
18	Aluminium trussed gangway	m	115	$ 11,500	$ 1,322,500
20	Gangway balustrade and roof over	m	105	$ 2,000	$ 210,000
68	Re-use redundant gangways to night mooring	m	40	$ 1,000	$ 40,000
21	Hinged connection to pontoon	No	9		Incl.
22	Pinned connection to existing waiting area/gangway	No	9		Incl.
80	Fenders to gangway link supports	No	18	$ 2,000	$ 36,000
	Access Pathway Infrastructure Total				**$ 2,233,500**
PO	**Pontoon**				
6	Steel pontoon structure	t	1420	$ 6,000	$ 8,520,000
19	Ballast to pontoon (reinforced concrete)	m³	227	$ 900	$ 204,300
61	Mooring pontoon structure	m²	175	$ 2,000	$ 350,000
48	Epoxy coating to pontoon	m²	6700	$ 170	$ 1,139,000
49	Cathodic protection to dual berth pontoon	No	5	$ 100,000	$ 500,000
62	Cathodic protection to ferry pontoon	No	2	$ 50,000	$ 100,000
50	Fenders to dual berth pontoon	No	5	$ 100,000	$ 500,000
63	Fenders to ferry pontoon	No	2	$ 50,000	$ 100,000
35	Tug hire for pontoon positioning	Day	9	$ 2,100	$ 18,900
47	Pontoon to bulwark pin connection	No	7	$ 25,000	$ 175,000
71	Concrete anchor and chain	No	7	$ 10,000	$ 70,000
7	Aquadeck/timber flooring	m²	2540	$ 120	$ 304,800
8	Glass balustrade	m	430	$ 500	$ 215,000
64	Gates to balustrade	No	14	$ 1,000	$ 14,000
9	Ramps, steps, landings, balustrades and handrails	No	7	$ 40,000	$ 280,000
10	Timber seating	m	504	$ 750	$ 378,000
	Page Total				**$ 17,752,500**

Deliverable Requirements / Item — Rates Current At July 2011

		Unit	Qty	Rate	Total Cost
PO	**Pontoon (cont)**				
16	Timber screening	m²	672	$ 250	$ 168,000
	Pontoon Total				**$ 13,037,000**
PI	**Piles**				
30	Marine Engineer - check barge and chain crane	Item			$ 50,000
29	Barge establishment and positioning	Item			$ 100,350
31	Barge hire	Mth	21	$ 63,000	$ 1,323,000
32	Barge spuds and spudkeeper	No	9	$ 51,000	$ 459,000
33	Barge relocation costs	No	9	$ 2,100	$ 18,900
34	Feeder barge and tug hire	Day	27	$ 3,700	$ 99,900
36	Marine Hull insurance for barge	Item			$ 80,000
37	Crane hire	Week	90	$ 4,000	$ 360,000
79	Removal of existing temporary gangways, pontoons and piles for re-use or sale	No	9	$ 25,000	$ 225,000
39	Piling rig establishment costs	No	9	$ 20,000	$ 180,000
1	800mm dia 16mm steel piles - supply	m	525	$ 520	$ 273,000
52	457mm dia 12.7mm steel piles - supply	m	650	$ 260	$ 169,000
40	Pile driving - 900mm dia	No	21	$ 10,000	$ 210,000
53	Pile driving - 457 mm dia	No	26	$ 6,000	$ 156,000
41	Pile rock socketting allowance	Item			$ 350,000
56	800mm dia fender piles, including driving and poly sleeves	No	20	$ 35,000	$ 700,000
42	Cut top of piles	No	47	$ 250	$ 11,750
46	Denso-jacket and cathodic protection to 900mm dia piles	No	21	$ 11,000	$ 231,000
54	Denso-jacket and cathodic protection to 457mm dia piles	No	26	$ 6,000	$ 156,000
44	Safety/working platform - establish first use	t	50.01	$ 8,000	$ 400,080
45	Relocate safety/working platform	No	9	$ 50,000	$ 450,000
43	Formwork tub to pile caps	No	9	$ 10,000	$ 90,000
38	Concrete truck delivery (via feeder barge)	Day	29	$ 1,600	$ 46,400
2	Cast insitu concrete pile cap	m³	125	$ 400	$ 50,000
3	Reinforcement to pile cap and piles	t	25	$ 2,500	$ 62,500
55	Pile cap to gangway piles, incl formwork, concrete and reinforcement	No	18	$ 10,000	$ 180,000
4	Bulwark - precast concrete (post tensioned)	m³	280	$ 650	$ 182,000
5	Bulwark - stainless steel and UHMWPE block pontoon connection	No	7	$ 100,000	$ 700,000
70	Bulwark - precast concrete skirt panels	m²	308	$ 450	$ 138,600
78	Bulwark - fender and deformable cover	No	7	$ 5,000	$ 35,000
	Piles Total				**$ 7,487,480**
	Page Total				**$ 7,487,480**

Deliverable Requirements / Item — Rates Current At July 2011

		Unit	Qty	Rate	Total Cost
RS	**Roof Structure**				
11	Steel columns to roof	m²	2,890	$50	$144,500
12	Steel roof structure	m²	2,890	$260	$751,400
13	Zinc standing seam roof	m²	2,890	$200	$578,000
14	Zinc perimeter flashings and gutters	m	765	$120	$91,800
15	Soffit lining	m²	2,890	$200	$578,000
	Roof Structure Total				**$2,143,700**
SE	**Services**				
23	Rainwater storage tank within pontoon, pump set and outlet	No	7	$25,000	$175,000
24	Light and power upgrade to waiting area	No	5	$10,000	$50,000
25	Light and power to gangway	m²	436	$150	$65,400
26	Light and power to pontoon	m²	2,540	$150	$381,000
69	Light and power to mooring	m²	175	$100	$17,500
27	Warning lighting to bulwark	No	7	$10,000	$70,000
77	Warning lighting to mooring	No	2	$10,000	$20,000
60	Roof mounted solar pv cells	m²	210	$1,000	$210,000
58	Integrated information/signage allowance	No	7	$25,000	$175,000
59	Wifi compatibility	No	7	$25,000	$175,000
	Services Total				**$1,338,900**
AA	**Additional Amenity**				
28	Kiosk/coffee trolley point, including all services, etc	No	5	$50,000	$250,000
72	Bulwark signage	No	7	$10,000	$70,000
73	Pontoon and waiting area signage - city cat terminal	No	5	$20,000	$100,000
74	Pontoon and waiting area signage - ferry terminal	No	2	$15,000	$30,000
75	Entry portal	No	5	$100,000	$500,000
	Additional Amenity Total				**$950,000**
	Estimated Nett Cost			**$**	**29,885,580**

9.4 WHOLE OF LIFE CYCLE RECURRING MAINTENANCE COST

The form and materials of the concept have been carefully chosen to yield the greatest benefit to the community over the terminal's life cycle.

The versatile form and function of the concept will boost efficiency of the CityCat system via the scheduling benefits gained in the ability to wait on board the pontoon and providing the opportunity for dual gate boarding / disembarking. The latter feature could be called upon perhaps only during peak times, providing the extra efficiency to the system needed to reduce the burden on CityCat fleet numbers. Compared to the style of dual vessel terminal currently in place at North Quay, the long single pontoons also provide for greater adaptability to evolution of vessels that may be used through the next 50 years.

The efficiency of the concept design can be expressed through the roles of each of the terminal components. Careful consideration has been given to the purpose of each component, which has resulted in minimisation of complexity through virtually all components performing multiple functions thereby providing excellent value for money.

In addition to maximising versatility and efficiency of form, materials and detailing have been selected to minimise the maintenance burden throughout the life cycle of the terminals:

- The few piles that are required in the concept are not impacted by vessels and nor are they used as guides for the pontoon. Their protective coating should therefore be highly reliable and the opportunity exists for use of a petrolatum impregnated tape wrapping system where maintenance intervals may be in the order of 25 years.
- Exposed faces of the River Pier superstructure are constructed from precast 50 MPa concrete with cover and quality of concrete compliant with AS 3600 durability Exposure Classification C2. A high degree of quality control and efficiency will be possible from constructing the components from accurate repeat-use forms in a controlled onshore environment, and minimal maintenance is expected over the terminal's life cycle.
- The pontoon is a closed cell steel box with relatively simple outer surface that is intentionally shaped to minimise its risk of being subject to impact damage from flood-borne debris. Exposed corners and edges of the fabricated steelwork are ground to a radius of at least 2 mm to facilitate adhesion of the ultra-high-build epoxy coating, and a coating maintenance interval of in excess of ten years should be expected.
- The pontoon superstructure / roof form is open and uncomplicated thus minimising maintenance risk, and clad in a durable zinc material.
- The gangway, fabricated from aluminium or steel is an inherently durable structure and detailed for fatigue loading.
- Sliding / rolling interfaces are minimised by the concept when compared to a conventional cantilever pile supported pontoon. The pins and bearings fixing the gangway in place can be selected to be essentially maintenance free. The sliding pads on the pontoon's C-frame connection to the River Pier are similar to those used cantilever pile restraints, and are provided with a plug-in holder assembly to enable rapid replacement as required. It is expected that wear on these pads will be less than is experienced on existing cantilever pile supported CityCat pontoons because the gangway radial arm supports a significant share of operational load on the pontoon.

359

BCC.114.0720

10 PROFESSIONAL SERVICES DETAILS

10.1 PROJECT PROGRAM FOR DETAILED ADVISORY SERVICES – STAGE 3

As provided in the Briefing Ferry Terminal Design Competition document dated 9th June 2011, we understand the program phases to be as follows:

1	Design Procurement	2 months	July 2011 – End August 2011
2	Detailed Design Terminals	6 months	September 2011 – End February 2012
3	DA Planning	8 months	November 2011 – End June 2012
4	Construction Procurement	12 months	March 2012 – February 2013

10.2 DESIGN ADVISORY PROJECT TEAM

Our team members have been chosen for their complementary skills in ferry terminal design, the Design Advisory team proposed is available to undertake the Stage 3 Design Advisory services and will be led by [redacted] The core team is as follows:

[redacted]

10.3 SCHEDULE OF HOURLY RATES AND PERCENTAGE OF RESOURCE ALLOCATION

Personnel	Stage 3 - Allocation / Hours				Suggested total hrs / person expressed as a % of total team commitment	Percentage Allocation over project duration	Hourly Rate
	Phase 1	Phase 2	Phase 3	Phase 4			
[redacted]	16	48	16	16	12.50%	2.50%	$310
	32	96	32	32	25.00%	5.00%	$245
	10	40	10	10	7.50%	1.82%	$245
	16	48	16	16	12.50%	2.50%	$200
	32	96	32	32	25.00%	5.00%	$310
	16	32	16	16	12.50%	2.08%	$245
	8	16	8	8	5.00%	1.04%	$200

* Percentage allocation based on 24 months, 3,840 hours – hourly rates exclude GST

10.4 DETAIL OF REIMBURSEMENT

Cox Rayner Architects will coordinate and submit a single invoice monthly on behalf of the Design Advisory team. Our terms are generally for payment within 14 days, or as otherwise agreed.

BCC.114.0721

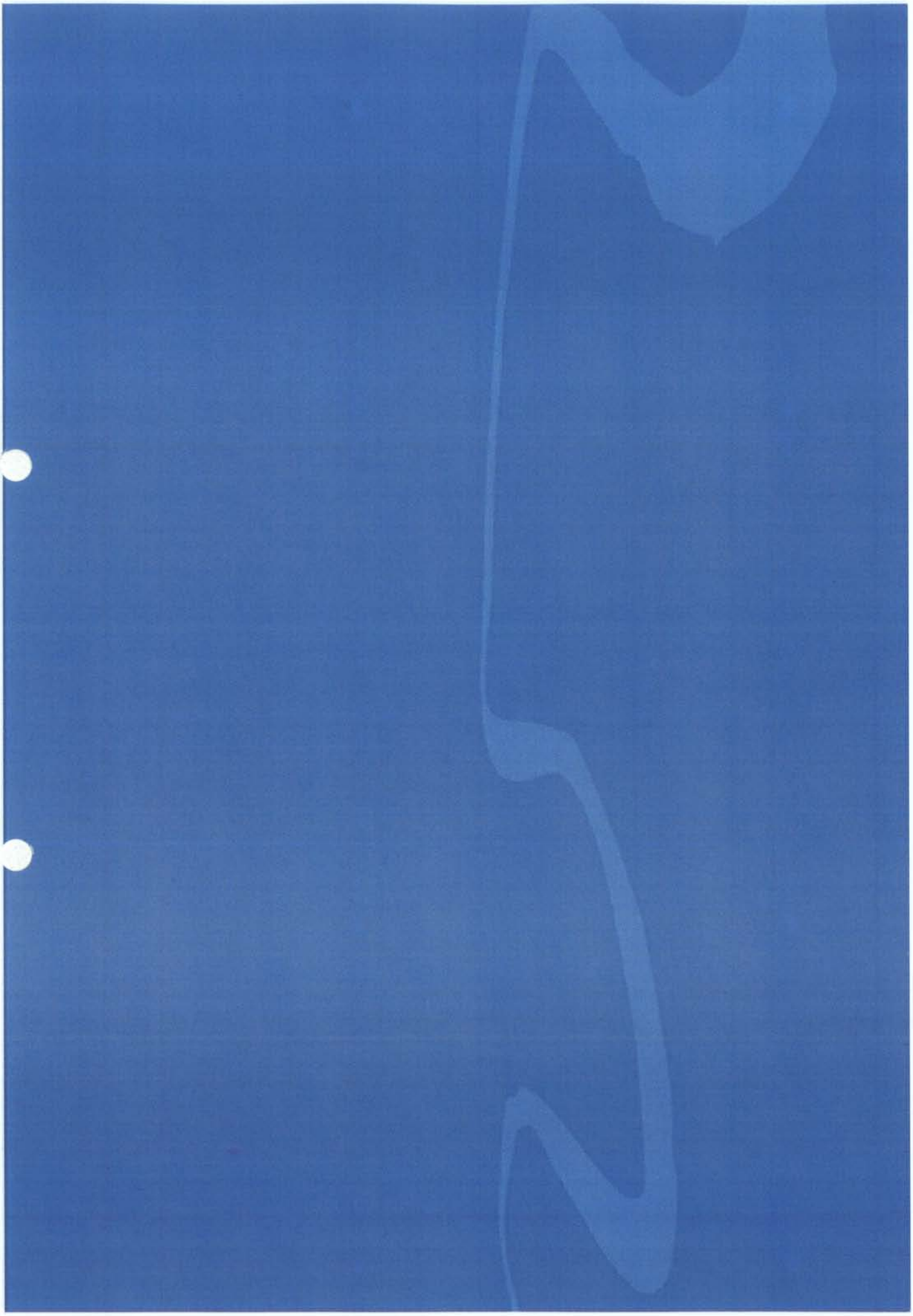

BCC.114.0722

BRISBANE CITY COUNCIL
FERRY TERMINAL DESIGN SPECIFICATION
August 2011

1. DESIGN REQUIREMENTS

The principal requirements for the preliminary and detailed design of BCC ferry terminals are specified in the following sections.

The design requirements presented in this specification are Council's preferred design criteria provided as guidance for concept and detailed design. Designers may provide alternative methodologies and/or materials so long as the terminal achieves maximum functionality and represents value for money to Council, as approved by Council. The system and components shall be suitable for the specified design criteria.

1.1 General Requirements

The pontoon and major components shall have a minimum design life of 50 years. All components shall be designed for low maintenance, maximise off-site pre-fabrication of structures to minimise terminal closure time during construction and to remain in a reasonable condition for the life the pontoon structure as well as considering 'whole of life costs'.

The general design criteria are:-

- To be in accordance with:-
  - AS4997 "Guidelines for the design of maritime structures";
  - AS3962: 2001 "Guidelines for the Design of Marinas";
  - Department of Environment and Resource Management's (DERM) "Operational Policy – Building and Engineering Standards for Tidal Works";
  - Building Code of Australia 2011;
  - Council's Crime Prevention Through Environmental Design (CPTED) Planning Scheme Policy; and
  - all other relevant Australian Standards except where modified by specific requirements of Council described in the detailed design specification.
- The nominal size, and extent are to be designed to conform to the Disability Discrimination Act (DDA) 1992, Disability Standards for Accessible Public Transport (DSAPT) 2002 and all relevant Australian codes and requirements of relevant Authorities, except where modified by specific BCC requirements;
- All waiting areas, walkways, gangways and pontoons shall be fully covered and designed to suit a sub-tropical marine environment;
- The detailed design shall be in accordance with the Concept Design developed by Cox Raynor and included with the tender documents;
- Be suitable for all CityCat vessels between 29.05 and 35.5 displacement tonnes;
- Designs shall consider utilising existing structures and be contained within boundaries determined by Maritime Safety Queensland (MSQ) and DERM;
- The design must maximise the implementation of sustainable features, such as recycled materials, rainwater collection tanks, solar panels and energy efficiency;
- The access to the structure shall consist of a durable gangway, and walkways where appropriate, supported by a fixed walkway or on-shore by a concrete or other approved foundation, with the outer end seated or fixed on the pontoon, for a minimum life of 50years;
- It must allow for efficient management of vessel movement. The design must take into account the operational requirements identified by Council's ferry operator and the Regional Harbour Master, Brisbane;

- The pontoon and pile arrangement must allow for dual berthing of CityCat vessels during operations;
- The pontoon shall be designed to minimise eddying, drag forces and "negative lift" to ensure stability and have 900mm minimum unloaded freeboard at passenger door level at all tidal levels for CityCat vessels. For terminals only serviced by the lower freeboard CityFerry vessels, the pontoon deck shall be suitable for a 900mm freeboard with a system to accommodate safe access for the lower freeboard;
- The design shall include a modular system of pontoons to accommodate any particular combination of berthing demand such as full dual berth, partial dual berth, and single berth;
- The pontoon and pile arrangement must allow for overnight mooring of CityCat and/or City Ferry vessels. The number of berths shall be determined based on the physical constraints of the site and consultation with Council and Regional Harbour Master, Brisbane;
- All structures must be designed to be flood resilient. Current velocities and heights used in design must be taken from Council's flood modelling specific to the site. Detailed flood/tidal river current flow analysis will need to be carried out, where not available from Council in the form of a three dimensional model;
- The design of all infrastructure must be appropriate for all tidal levels between HAT and LAT and the determined flood levels, current velocity and debris loads on all structures, or where approved otherwise by Council;
- The articulated section of the gangway shall not prevent the pontoon rising during a storm event up to the site specific worst combination of water levels;
- The pontoon and gangway shall be free-draining and have a non slip surface free from longitudinal joints;
- Provision shall be made for an Add-Value Vending Machine (AVVM), future installation of go-card swing gates, future CCTV, future real-time passenger information and future passenger distress points;
- Selection of design and materials should be based on "whole-of-life" costs and ease of construction. The design must incorporate pre-fabricated materials and elements that minimise on-site construction time; and
- The design is to be consistent with the objectives for the project listed above and the more detailed requirements described in this specification and the design Consultancy Brief.

1.2 Live Loads

Minimum Live Load:

- 5kPa Structural;
- 3 kPa Stability;
- 4.5 kN concentrated load; and
- The requirements of AS3962 and AS4997.

Basic dimensions for mooring design of the 3 generations of CityCats are provided in the following table.

Generation	Length Overall	Maximum Beam	Maximum draft	Displacement	Underkeel Clearance	Windage Area
I	24.95m	7.70m	1.35m	29.05 tonnes	2m at LAT	N/A
II	25.50m	7.60m	1.42m	35.50 tonnes	2m at LAT	Profile: 73m^2 Bow on: 22m^2
III	25.50m	7.60m	1.42m	35.50 tonnes	2m at LAT	Profile: 73m^2 Bow on: 22m^2

The dimensions of the CityFerry vessels vary considerably. Information on specific vessels will be

provided to the designer.

The structures must be designed to accommodate the worst case mooring loads of 2 CityCats and/or CityFerry vessels under full flood conditions, unless approved otherwise by Council.

1.3 Berthing Load

Normal Berthing Load
The pontoon and its components need to be designed for the berthing loads arising from the worst case CityCat and/or CityFerry vessel striking the structure at 15 degrees (to the quay line) at a velocity of 0.5m/sec.

Accidental Berthing Load
The pontoon and its components need to be designed for the berthing loads arising from the worst case CityCat and/or CityFerry vessel striking the structure at 45 degrees (to the quay line) at a velocity of 3.0m/sec.

1.4 Environmental Loads

The pontoon shall be designed for the following environmental conditions:

Wind Waves: The consultant will be required to calculate the maximum fetch and in order to estimate the design wave heights at the site adopt:

- regional basic design wind three second gust velocities from AS 1170.2:2002, Region B, terrain category 2
- assume a storm duration of 1 hour
- mean wind speeds over the duration of the storm being a conversion of the three second gust from AS 1170.1 using the method in the CEM 2001, Fig II-2-1.

Key assumptions are:

- Perfect coincidence between the flood/storm tide peak, the design wave peak and the design wind peak. This assumption is adopted because the floods, storm tide and wind waves may be generated by the same meteorological event, i.e. a tropical cyclone.
- The design wave height is H_1 from AS 4997-2005, Clause 5.9.2, where H1% is the mean of the highest 1% of the waves.

Waves from Vessels: All components of the system shall be designed for the largest waves expected to be produced by vessels using the stretch of the river during the life of the structure, but the design waves shall be no less than 0.6m with a period of 6 seconds, unless approved otherwise by Council.

Current Loads: The pontoon system will be designed to the heights, velocities and debris build-up for as determined by Council flood modelling for the relevant reach of the river. Where Council can not provide specific flood data for design of a particular site, a three dimensional flood model shall be undertaken by the designer.

The pontoon is required to stay attached to the pile(s) for the maximum water level heights (the worst load combination case), but a suitable tethering system may be detailed to retain the pontoon and gangway, if so agreed with Council.

Tidal Levels: The pontoon is required to be useable throughout all ranges of tidal levels for the closest site of tidal levels published by MSQ.

Wind: In accordance with AS1170.2 the ultimate limit state wind shall be taken as:-

- Regional Wind speed, Region B, R=500
- Terrain category 2
- Multipliers shall be determined in accordance with the site specific conditions

The design shall account for the maximum size vessel in any position along the pontoon. The vessel wind area shall be calculated based on the windage area of the largest CityCat vessel expected to berth at the terminal. Where this is not available the vessel windage area shall be determined in accordance with AS3962 Table 4.4.

Sea Level Rise:

The design shall allow for the latest accepted data by DERM for future sea level rise over 50years.

1.5 Serviceability Criteria

The pontoon shall be designed for the following serviceability criteria.

Movement: The pontoon shall be designed to have a maximum lateral acceleration at the commuter centre of gravity of $A_h < 2.5m/s^2$.

The pontoon and gangway shall be restrained such that movement does not cause passengers to feel motion discomfort, particularly to passengers who are elderly, have restricted mobility and small children. The designer shall provide evidence in the form of testing, calculations or other method that clearly demonstrates this to Council.

Surface: The pontoon shall have a non slip surface coating approved by Council, with preferential consideration given to Comcork AquaDeck®. The surface shall be Wet Pendulum Test Class V to AS/NZS 4586, Table 2.

Articulation: The pontoon system should be designed so that the pontoon remains on the piles up to the worst case load combination of water heights. The Relative Level (RL) of the top of the pile, not including the pile cap or deflection structure shall be such that it is 1.0m higher than the pile guide or C-clamp system. The design should also allow for all components of the terminal to be retained at the site by way of an anchor system designed for all events up to and including the highest combination of water levels, where specifically requested by Council. The gangway connection at the walkway or shore abutment shall allow for the raising of the pontoon above the level of the walkway or abutment connection with no permanent damage to all components during flood events.

Vandalism: The pontoon, piles and components shall be designed to be resistant to vandalism.

DDA and DSAPT Compliance: All fixed walkway and waiting area/terminal levels shall be designed to comply with DDA 1992 and DSAPT 2002, and subsequent amendments, at all times except articulated gangway levels and angles which shall comply with DDA, DSAPT and AS1428.1 for 80% of the time between the Highest Astronomical Tide (HAT) and Lowest Astronomical Tide (LAT). A statistical analysis of the tidal range may be required to ascertain this.

1.6 Piling to Pontoon and Berthing Piles

The Concept Design does not envisage pontoon and berthing piles, therefore this section 1.6 of the Design Specification will only apply to the deflection structure piles and where pontoon and berthing piles are determined through detailed design to be required.

The responsibility for the pile design including location and number of restraining piles, correct levelling and setting out of the piles to suit the pontoon system shall rest with the Designer. For the pontoon restraining piles, the finished pile position and rake of the piles shall be such that the operation of the restraint brackets is not impaired over tidal range levels.

General Requirements:

- Provide piles consistent with the design and the ferry operational requirements of the terminal;

- Location, number and impact capacity of piles are to be determined based on consultations with Council and Council's ferry operator, and in accordance with the relevant Australian codes;
- Provide piles configured to enable safe docking of a 12-metre cross-river ferry and worst case CityCat loads and overnight mooring of two CityCats, in consultation with Council and the ferry operators;
- Maintenance of the wearing components of the piles is not to interrupt ferry operations and to be designed to minimise maintenance;
- A scour and accretion allowance will need to be considered. These allowances will be dependent on geotechnical investigations that have occurred to date and environmental conditions;
- Design moveable elements on the piles that minimise nuisance noise to surrounding properties;
- All piles shall be specified to be driven, bored or jetted into final position in the locations and within the nominated tolerances; and
- The pile design shall be based on the geotechnical information supplied by Council or other geotechnical information approved by Council.

Specific and Other Requirements:-

Materials: Council's preference is for steel piles, either hollow or concrete filled depending on the optimal cost and design solution, with appropriate cathodic protection. All piles shall have suitable PVC, Polyethylene or GRP pile caps.

For concrete filled steel piles, the concrete filling shall be tremmied to the bottom of the closed pile section and adequate vibration provided to ensure sound dense concrete. A steel reinforcement cage should only be incorporated in the design where it is demonstrated that there is a clear cost and constructability advantage for the structure.

For reinforced concrete piles, concrete shall be minimum 50MPa and minimum cover to reinforcement shall be 50mm. All concrete pile design shall be in accordance with AS3600 and other relevant Australian Standards.

Unreinforced concrete piles will not be accepted.

Cathodic Protection: For steel piles a cathodic protection shall be incorporated in the design for a minimum 10 year design life. Minimum requirements shall be piles painted with Interzone 485, or other specialist marine paint system approved by Council, and suitable aluminium anodes. Corrosion protection paint shall be applied under controlled conditions in strict accordance with the manufacturer's recommendations. Impressed current systems shall only be incorporated where approved by Council.

Fender System: The piles shall have a fendering system suitable to protect the piles and boats from damage for all tidal conditions and wave action. Rubber fenders shall be supplied by a reputable and recognised fender manufacturer such as Trelleborg or Maritime International. Fender design shall be in accordance with PIANC document "Guidelines for the design of fender systems" 2002. Fender systems shall have HDPE or UHMW-PE facing.

Fender chains, shackles and associated accessories shall be hot dipped galvanised for a minimum 10 year life, unless otherwise approved by Council.

Fendering on turning/breasting piles shall be HDPE or UHMW-PE. Timber fenders and Fibre composite fenders, or facing, will not be accepted, unless otherwise approved by Council.

Other Pile Types: Concrete, fiber composite, timber or other pile types shall only be incorporated in the design with the approval of Council.

Other Pile Protection: Pile protection by HDPE sheathing shall only be used with the approval of Council. Where approved, HDPE sheathing shall:-

- be fully sealed at the top of sheathing;
- designed so no movement occurs due to vessel or debris impact;
- penetrate into the riverbed for a minimum distance of two (2) metres to ensure a watertight seal; and
- be fixed so the sheathing does not move due to, or can accommodate, riverbed scour or accretion.

Location and Clearance: Restraining piles shall be located outside the pontoon area and are to be located along the front and end faces of the pontoons. Consultation shall be undertaken with the Ferry Operator's, Regional Harbour Master and Council for locations of berthing and mooring piles.

1.7 Pontoon

General Requirements:

- The Concept Design principles shall provide guidance for the detailed design of the pontoon;
- The Pontoon shall be designed and constructed from new steel, with concrete ballast, to Australian Standards. A pontoon designed as primarily concrete, primarily concrete with foam core, aluminium or other primary materials shall only be incorporated in the design with Council's prior approval. Concrete ballast shall have minimum reinforcing to prevent shrinkage;
- Design, ballasting and fixing of the pontoon to allow vertical movement, to control movement in the horizontal plane due to waves and tidal flow, and to minimise eddying, drag forces and negative lift;
- Create a modular system of new pontoons that can be sized to become the patron waiting areas & can accommodate any particular combination of berthing demand such as full dual berth, partial dual berth, and single berth;
- Design to be based on normal peak tides, the maximum flood current velocity and the worst combination of environmental loads;
- Provide ready, watertight, internal access for maintenance including connection points for release of carbon dioxide, pumping of oxygen into pontoon bulkheads and sinking;
- Provide for easy removal of the pontoon and gangway for maintenance and/or flood events;
- Provide berthing bollards on the pontoon that allow safe tie-off at all times (without assistance from engine);
- Have freeboard of 900mm at the pontoon-CityCat interface with allowance for the lower freeboard of a CityFerry vessel, where required;
- Provide for day-to-day maintenance so as to not interrupt ferry operations;
- Design moveable elements of the deflection structure, pontoon, gangway and walkway to minimise nuisance noise to surrounding properties;
- Provide potable water outlets for maintenance purposes of both facility and ferries;
- Provide illuminated signage of the ferry terminal site clearly visible from a Cityferry and/or CityCat; and
- Provide cover and lighting for boarding and alighting passengers consistent with Australian Standards and DDA and DSAPT legislation.

Specific and Other Requirements:-

Bulkheads: For hollow pontoons at least 1 bulkhead shall be incorporated to create 2 separate watertight compartments. In the event of the pontoon sinking, provide for the ability for the pontoon to be

retrieved. A water pump-out connection system shall also be incorporated into the design.

Corrosion Protection: Provision shall be incorporated in the design to prevent the creation of galvanic cells between dissimilar metals. For a steel pontoon, the minimum cathodic protection shall comprise of the following for a minimum 10year design life:-

- all exterior steel painted with a specialist marine paint system and suitable aluminium anodes attached to the exterior of the pontoon. Council's preferred paint system is Interzone 485,
- all interior steel painted with a specialist marine paint system OR suitable aluminium anodes.

Tolerance: The pontoon shall be manufactured to the following dimensional tolerances:

- Width and height +/- 5mm
- Out of square +/- 5mm

Restraint: The pontoons shall be restrained by the deflection structure similar to that shown in the Concept. Provision shall be incorporated in the design to prevent the creation of a galvanic cell between dissimilar metals and the minimal maintenance that does not disrupt ferry operations.

Secondary Restraint: The pontoons may be fitted with flood restraint chain(s) and anchor(s) with a capacity to prevent the pontoon from being washed away during the design flood event. The need for a secondary restraint shall be based on the specific site conditions.

Mooring Bollards/Cleats: Aluminium or stainless steel mooring bollards or cleats shall be fitted to the pontoon at a maximum of 3 metre centres. Provision shall be incorporated in the design to prevent the creation of a galvanic cell between dissimilar metals.

Uniform Displacement: The pontoon shall sit level in the water with uniform freeboard on all sides when loaded by the gangway dead load at mid tide. The pontoon deck shall be designed that no ponding of fluids occurs.

Fixing:

- All bolts shall be Grade 316 Stainless Steel (UNS S31600) A4-70. Nuts shall be Grade 316 (UNS S31600). Washers shall be 316 (UNS S31600), electropolished or passivated;
- Nuts and bolts shall comply with the relevant Australian Standards and shall be provided with mill or NATA certified test result confirming grade strength;
- Bolts shall have rolled threads. The nuts and washers shall be electropolished or passivated in nitric acid; and
- Bolts shall be tightened to the manufacturer's recommended torque using a torque wrench. Nuts shall be lubricated with an anti-seize, nickel based lubricant subject to the approval Council.

Dissimilar Metals: Where dissimilar metals may be in contact, the design shall allow for inert separators to prevent the creation of a galvanic cell.

Fender System: The berthing pontoon shall have a suitable fendering system suitable to protect the pontoon and boats from damage over all tidal conditions and wave action. Fenders shall be rubber with HDPE or UHMW-PE facing. Rubber fenders shall be supplied by a reputable and recognised fender manufacturer such as Maritime International, Trelleborg or Bridgestone. Fender design shall be in accordance with PIANC document "Guidelines for the design of fender systems" 2002, unless otherwise approved by Council.

Fender chains, shackles and associated accessories shall be hot dipped galvanised for a minimum 10 year life, unless otherwise approved by Council.

Timber fenders and Fibre composite fenders will not be accepted, unless otherwise approved by Council.

Gangway landing: The gangway shall land on the pontoon in a recess such that the gangway finishes level with the pontoon deck. A stainless steel or aluminium cover plate shall be provided to cover the gap between the gangway and pontoon, with a replaceable wear plate included on the pontoon deck.

Ladder: At least two access ladders shall be provided on the pontoon.

Fire Protection: No provision is required for fire protection or prevention equipment, unless otherwise required by the Building Code of Australia, however the design shall consider the use of materials that minimize fire risks.

Roofing: Roofing material shall preferably be Lysaght Longline 305®, unless otherwise approved by Council.

Fencing: Fencing shall be 316 stainless steel or aluminium, unless otherwise approved by Council.

1.8 Walkways, Access Paths and Gangway

General Requirements

- Ensure passenger movements are efficient with an emphasis on embarking and disembarking;
- Be fully DDA and DSAPT compliant for two way access including all cambers, crossfalls etc;
- Have minimal independent movement due to wave action and tidal movements;
- The gangways shall be of stainless steel or aluminium construction, unless otherwise approved by Council;
- Provide cover and lighting for boarding and alighting passengers; and
- Be designed to allow passengers to line-up on the gangway, if required.

Specific and Other Requirements

Slope: Gangway levels and angles shall comply with DDA, DSAPT and AS1428.1 for 80% of the time between the Highest Astronomical Tide (HAT) and Lowest Astronomical Tide (LAT).

All walkways and access paths shall comply with DDA, DSAPT and AS1428.1

Materials: The gangway should be designed to:

- Incorporate aluminium or stainless steel fencing, unless otherwise approved by Council;
- Incorporate Lysaght Longline 305® roofing, unless otherwise approved by Council; and
- Provide step-free, Comcork AquaDeck® non-slip walking surfaces with covered flaps at all moving connections, unless otherwise approved by Council;

Handrails:

- The gangways shall have handrails 1100 high both sides, shall be provided with childproof infill and fencing and designed in accordance with DDA, DSAPT and AS1428.1 requirements;
- The minimum width inside handrails shall comply with the requirements of DDA, DSAPT and AS 1428.1;

Gaps and spaces: All gaps on access paths, walkways and gangways shall be designed in accordance with DDA, DSAPT and AS1428.1 requirements so as not present a trip hazard.

Removable:

Consideration shall be given to the easy removal of the gangway for maintenance or emergency situations in accordance with the principles of the Concept Design.

1.9 Waiting Area

This section applies to new, reused existing waiting areas and the pontoon as appropriate. The Concept Design principles shall provide guidance for the detailed design.

- Provide a see-through, lightweight structure that blends aesthetically with the surrounds of the terminal location;
- Be environmentally sympathetic to the surrounding structures;
- Be easy to clean and maintain;
- Incorporate built in vandal-resistant materials;
- Provide passenger cover and shelter from the elements with Lysaght Longline 305® roofing, unless otherwise approved by Council;
- Provide natural ventilation consistent for a sub-tropical environment;
- Provide for non-slip, free-draining trafficable surfaces;
- Provide stainless steel or aluminium fencing, unless otherwise approved by Council;
- Provide sufficient waiting area space and seating for the projected levels of patronage, as agreed with Council;
- Where wood is incorporated into the design, timber shall be recycled Australian Class 2 hardwood;
- Where plastics are used, plastic material shall be recycled;
- Facilitate litter and debris containment including provision of dual rubbish bin(s);
- Treatment of rain and cleaning water run-off;
- Install a clock with emergency power backup which is visible to passengers in the waiting area and when reading the information board;
- Provide crowd-control elements which retain waiting passengers within the waiting areas until disembarking passengers have cleared the pontoon and/or gangways;
- Undertake a structural check of the existing waiting area including testing of structural elements that will be re-used in the design; and
- Designed in compliance with the Building Code of Australia with documentation to confirm compliance.

1.10 Electrical

- Comply with all relevant Australian Standards, in particular AS/NZS 3004.1, the Queensland Electrical Safety Act and other relevant Legislation;
- Earth all metal structures and provide signage to that effect;
- Materials should be corrosion resistant and/or cathodically protected;
- At least 1 double general power outlet with spring loaded protective cover shall be provided on the pontoon;
- At least 1 double general power outlets with spring loaded protective cover in the waiting area;
- All general power outlets shall be concealed from public view to the greatest possible extent;
- Include provision for motion sensors for after hours lighting;

- Include provision for dimmable lighting;
- A separate metered switchboard including:-
  - Lockable 316 stainless steel cabinet (Energex keyed);
  - at least 1 double general power outlet; and
  - Sealed to prevent escape of smoke to the atmosphere.
- Provide a control system, to manage navigational and other lighting;
- Laying of segregated communications and data cabling conduits and components for installation of electronic ferry arrival, CCTV, Wi-Fi, passenger help points, information displays, electronic ticketing machines and go-card swing gates, as required by Council;
- Provide for a minimum of 3 spare circuits; and
- Ensure the nearest available point of supply for power has capacity to provide the required demand. If available power supply is not sufficient, the designer shall design any additional infrastructure required to adequate supply meets the terminal power demand.

1.11 Lighting

Lighting shall be designed in accordance with relevant DDA and Australian standards with strong preference given to low energy lighting options such as LED's. All lighting and electrical components shall be Australian assembled and readily available for maintenance and replacement. The preferred lighting is directed downwards onto the access paths, waiting areas, walkways, gangway and pontoon. The lighting layout shall not create a glare nuisance for traffic on the river, adjacent properties or for vessels berthing on the pontoon.

- Lighting levels within the waiting areas and on the walkway and gangway are to be minimum of 150 lux 12 months after the commencement of operations with the glare to be managed so as not to interfere with navigation or adjacent properties;
- Safe lighting levels are to be achieved in all other areas, particularly access to the Terminal from the nearest drop-off point or public transport interface, in accordance with the relevant codes;
- Provide emergency lighting;
- Provide PV cells for automatic light illumination;
- Lighting shall be easily accessible for maintenance purposes;
- Provide navigational lighting in accordance with the Regional Harbour Master's requirements;
- Provide light onto piles and to the edge of the pontoon to meet ferry operational needs;
- Include relevant lighting requirements of the CPTED planning scheme policy; and
- Council's preference is for LED lighting and supplied by Megabay, unless otherwise approved.

1.12 Accessibility

- Ensure access to the site and all areas of the ferry terminal satisfy Council's accessibility policies and obligations;
- Ensure efficient access for passengers, ferry operator's and maintenance crews;
- Allow sufficient space for disabled passengers to clearly pass at all areas of access ways;
- Ensure passenger and vessel movements on the pontoon, access ways and terminal are efficient; and
- Ensure access from the nearest ablution facility, drop-off point and/or public transport interface is

compliant with CPTED, DDA and DSAPT requirements based on the Access Audits undertaken by Council.

1.13 Water and Plumbing

- Design of water supply and sewerage shall be in accordance the Queensland Plumbing and Wastewater code, Plumbing Code of Australia, the Water Services Association of Australia Codes of Practice, BCC plumbing standards and relevant Australian Standards;
- The design shall allow for public toilets either in the waiting area or on the pontoon, and all associated componentry and plumbing design; and
- Drinking fountains in the existing waiting areas shall be considered.

1.14 Safety and Security Features

- Include the relevant requirements of the CPTED planning scheme policy;
- Passive design is to be primary means of ensuring user safety and ferry terminal security including minimisation of vandalism;
- Provide for safe ferry operations with appropriate approvals given by qualified Workplace Health and Safety officers in the field of Ferry Operations;
- Ensure the site and the ferry terminal is accessible for emergency services;
- Ensure design prohibits unauthorised access to any ferries moored at this location outside of operating hours, such as a lockable security gate, with lock accessible from both sides of the gate; and
- Provide security and passenger hold-point gates on the pontoon, gangway, walkway and terminal as directed and approved by Council.

1.15 Environmental and Sustainability

- Provide tanks to collect rainwater from structures for cleaning/maintenance with mains backup, where required by Council. A tap shall be included for hose connection and consideration shall be given to ensuring adequate pressure;
- Capture and treatment of runoff from cleaning and maintenance procedure, where required by Council;
- Compliance with necessary environmental approvals and permits;
- Provide solar panels that connect to the electrical grid or provide sufficient power for lighting and electrical services to the terminal, as agreed with Council;
- Consider any noise amelioration measures;
- Maximise the use of recycled and recyclable building materials;
- Design to include and minimise the effects on any adjacent riverwalls, erosion protection structures and stormwater outlets of day-to-day operations; and
- Design should take into consideration the impact of services on neighbouring properties, if applicable.

1.16 Information and Signs

- Provide prominent signage showing the name of the ferry terminal, visible day and night, from the land and water, in consultation with Council;
- Provide static timetable cases for ferry and nearby bus services and operational information, in

consultation with Council;

- Provide all necessary signs including directional signs, safety signs and locational plans that have some multi-lingual content and meet the needs of the sight-impaired and comply with Australian Standards AS 1428.1 (2001), AS 1428.2 (1992) and AS1482.4;
- Provide operational signs throughout the facility mounted at appropriate locations, in consultation with Council; and
- Signs are to be consistent with Council and Translink style and sign standards. Council's ferry operator shall also be consulted in relation to standard signage and ground marking rollout.

1.17 Landscaping

- Provide landscape design to enhance the surrounding environment;
- Landscaping is not to diminish passenger safety;
- Provide relevant street/park furniture including garbage bins, as directed by Council; and
- Provide bike storage racks as otherwise directed by Council.

1.18 Transport Interfaces

- Provision of passenger set down facilities at the Terminal, particularly addressing safety concerns for pedestrians;
- Provide safe and accessible interface of abled and disabled ferry passengers and bikeway users both on and off the facility; and
- Identification of 1 to 2 crew car parks at or near the ferry terminal, where possible.

1.19 Design Documentation

The designer shall submit to Council the following minimum mandatory design documentation for **each** ferry infrastructure site:-

- Design basis report prior to commencing preliminary design;
- Preliminary design plans for each site;
- Preliminary design report;
- Water Allocation Area Plan (WAAP) for MSQ approval;
- Plans suitable for submission to DERM for Resource Entitlement;
- Plans suitable for submission to SLAM for Reserve approval;
- SPA approvals drawings;
- Plans suitable for BCC Plumbing approval;
- Construction Issue drawings;
- Construction specifications;
- At least five different Artist Impression or Montage views of each design for internal (Council) and external (Public/Media) communications purposes;
- Building Certifiers report stating full compliance with the Building Code of Australia;
- Certification from an accredited or experienced independent Consultant that the proposed design does, and the completed ferry terminal will, meet the appropriate DDA, DSAPT and relevant Australian codes;
- Quantity Surveyor's cost estimates and detailed Bill of Quantities suitable for construction tendering purposes;
- An RPEQ signed official form "Certification of Design of Prescribed Tidal Works" for all aspects of the design; and
- Final Design Report.

Submission timings shall be agreed with Council prior to commencing design.

1.20 Discrepancies

Any discrepancies between this specification and any relevant Australian Standards, Government legislation and/or BCC legislation, standards and policies should be brought to the attention of Council for clarification prior to commencing design.